Series 4, washing machine, front loader, 9 kg, 1400 rpm
WAN28227AU

- **SuperQuick 15/30**: Is a quick way of freshening up lightly-solied laundry.
- **Iron Assist**: Reduce wrinkles up to 50%. [1]
- **SpeedPerfect**: Perfectly clean in up to 65% less time. [2]
- **Reload function**: forgot an item? Add it easily to the wash.
- **ActiveWater Plus**: For highly efficient use of water even with smaller loads thanks to automatic load detection.

Maximum capacity in kg :	9.0 kg
Built-in / Free-standing:	Free-standing
Dimensions of the product:	845x598x590 mm
Net weight:	67.4 kg
Connection rating:	2300 W
Fuse protection:	10 A
Voltage:	220-240 V
Frequency:	50 Hz
Length electrical supply cord:	210 cm
Door hinge:	Left
Wheels:	No
EAN code:	4242005538133
Installation type:	Free-standing

4 242005 538133

WMZ2200	Floor securing component
WMZPW50W	Platform with pull-out, washer, cubic

[1] Test No. E-0323-PT-22 of the Deutschen Institute für Textil- und Faserforschung Denkendorf (DITF) of 12.07.22, related to the crease reduction of commercial cotton garments (T-shirts and shirts) in the Iron Assist program according to DIN EN ISO 15487 in comparison to textiles not treated with Iron Assist.

[2] Difference between the duration of Easy Care program 40°C and the duration of Easy Care program 40°C with SpeedPerfect. Duration of time saved varies based on load size.

Series 4, washing machine, front loader, 9 kg, 1400 rpm
WAN28227AU

Capacity

- Capacity: 9 kg

Consumption rates

- 5 Star Energy Rating
- Energy consumption 209 kWh per year, based on Cottons Eco 60°C, Cottons + Prewash: for stubborn stains on cottons or blended fabrics, Cotton program at 1400 RPM seven times per week. When tested in accordance with AS/NZS 2040.2. Actual energy use and running costs will depend on how you use the appliance.
- 4.5 Star water rating (WELS)
- Water consumption 78 l litres per wash. Using the Cottons Eco program at 60°C with 1400 RPM spin speed. In accordance with AS/NZS 6400. Actual water consumption will depend on how the appliance is used.

Programs

- Standard programs:
- Cottons: hard-wearing items made from cotton, linen or blended fabrics
- Cotton Eco: energy-saving program
- Easy care: items made from synthetic or blended fabrics
- Delicate/Silk: delicate, washable items made from silk, viscose and synthetics
- Wool: hand or machine washable items that are made from wool or contain wool
- Touch control option settingsinclude :
- Finish in (delayed start): delay the start of the program by up to 24 hours
- Rinse Plus: Adds more rinse cycles, suited for highly soiled clothing
- Prepare Start: before you press “Start”
- Start/Pause with Reload function: allows you to add a forgotten garment even after the wash cycle has started
- Temperature selection: manually adjust the temperature
- SpeedPerfect: reduce cleaning time by up to 65%
- Spin Speed: manually adjust the spin speed
- Special programmes: Drum Clean: cleaning and care program for the drum with reminder function, Iron Assist - with added steam for wrinkle reduction, Shirts/Blouses: non-iron shirts and blouses made from cotton, linen, or blended fabrics, Hygiene Plus, Easy Care: items made from synthetic or blended fabrics, Spin/Drain: spins and drains the water, Mixed: lightly soiled items made from cotton, linen or blended fabrics, Rinse: rinses and then spins the laundry, and then drains the water, Super 15'/30': short program for small lightly soiled items, delicate/silk, wool / hand wash

Features

- Iron Assist: Steam programme that reduces wrinkles on dry clothes
- SpeedPerfect: Allows you to reduce cleaning time by up to 65%
- .
- Reload function to pause machine operation for adding in last minute laundry items
- Large display for spin speed, remaining time, 24 h end time delay and load recommendation
- ActiveWater Plus: For highly efficient use of water even with small loads thanks to automatic load detection
- Large porthole, silver-black grey with 160° door for easy loading/unloading
- AntiVibration Side Panels reduce vibrations and noise levels, making it extremely quiet during the spin cycle
- EcoSilence Drive: Quiet, durable, and energy-efficient brushless motor (BLDC) with 10-year motor warranty
- Foam detection system to remove excessive foam
- Unbalanced load detection
- Acoustic signal for end of cycle
- Time delay to select end of time of your wash (1-24 hours) and time remaining indicator
- Noise insulation: Bottom cover
- Drum volume: 65 l

Performance

- Spin speed 400 - 1400 rpm
- Operating noise level (based on Cotton 60°C program): wash 48 / 75 spin dB(A)

Technical Information

- Stackable with a stacking kit fitting to the tumble dryer
- Slide-under height of 85cm
- Dimensions (H x W x D): 84.5 cm x 59.8 cm x 59.0 cm (63.2 cm including door handle)

Safety

- Child safety control lock

Series 4, washing machine, front loader, 9 kg, 1400 rpm
WAN28227AU
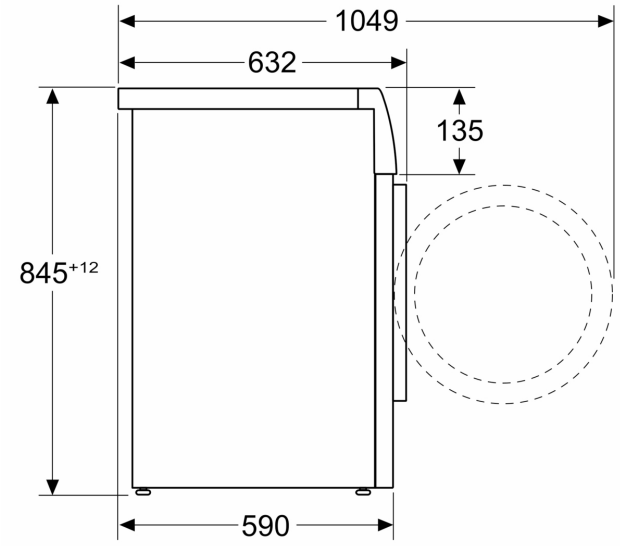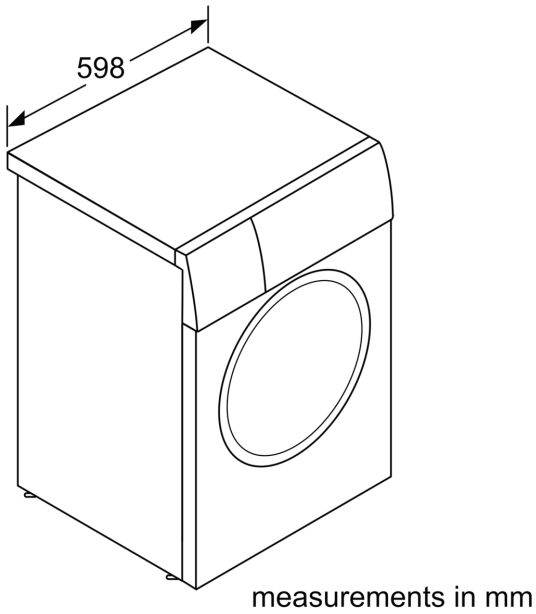
Measurements in mm