Series 6, fully-integrated dishwasher, 60 cm
SMV6HCX03A

Wifi connected dishwasher with an Extra Clean zone in the upper basket for heavily soiled dishes.

- **Info Light**: A red light on the floor indicates whether the dishwasher is switched on or off.
- **Extra Clean Zone**: Extra cleaning for items in your top basket.
- **Extra Dry**: Selectable option for additional drying.
- **Rackmatic**: Height-adjustable dishwasher basket for tall items.
- **EcoSilence Drive**: Especially energy-saving and silent in operation with a particularly high life span.

Maximum number of place settings:	15
Water consumption in litres per cycle of the eco programme:	11.0 l
Built-in / Free-standing:	Built-in
Height of removable worktop:	0 mm
Required niche size for installation (HxWxD):	815-875 x 600 x 550 mm
Depth with open door 90 degree:	1150 mm
Adjustable feet:	Yes - all from front
Maximum adjustability feet:	60 mm
Adjustable plinth:	Both horizontal and vertical
Net weight:	38.1 kg
Gross weight:	40.0 kg
Connection rating:	2400 W
Fuse protection:	10 A
Voltage:	220-240 V
Frequency:	50; 60 Hz
Length electrical supply cord:	175 cm
Plug type:	Standard 10 Amp plug
Length inlet hose:	165 cm
Length outlet hose:	190 cm
EAN code:	4242005546558
Installation type:	Integrated

SGZ0CL01	door lock mechancial, straight
SGZ1010	inlet and outlet hose extention
SGZ8BI00	Connection rail for divided furniture
SMZ5150AU	Kick panel stainless steel
SMZ5300	GlassSecure Tray

4 242005 546558

Series 6, fully-integrated dishwasher, 60 cm
SMV6HCX03A

Wifi connected dishwasher with an Extra Clean zone in the upper basket for heavily soiled dishes.

Capacity

- Capacity: 15 place settings place settings

Consumption rates

- 4 Star Energy Rating energy rating, 5.5 Star Water Rating (WELS).
- Water consumption of 11 litres per wash using Eco AU in accordance with AS/NZS 6400 and Energy consumption of 245 kWh per year using the Eco AU program seven times per week. Consumption is based on cold water connection and is tested in accordance with AS/NZS 2007.2
- Consumption test program: Eco 50°C

Design

- Heat Exchanger - Hygienic and efficient drying.
- AquaSensor™ technology: Regulates the water usage depending on the type and degree of soiling
- DosageAssist: Maximises the effectiveness of detergent tablets. The tablet is dropped into a specially engineered tray and is completely dissolved. For superior cleaning performance and a quieter wash.
- EcoSilence Drive® quiet and energy-efficient brushless motor (BLDC)BLDC Main Pump: Variable water and spray pressure to achieve optimum cleaning resultsBLDC Drain Pump: Fast and extra quiet draining of water, no gargling sounds
- 5 Spray levels for maximum water contact and optimum wash results
- Stainless steel interior tub
- SoftTouch buttons: Electronic soft-touch activated buttons
- Hidden control buttons integrated into the top of the door
- Ball bearing on top basket for an easy glide
- Low friction wheels on bottom basket
- Anti-slip protection strips in upper rack

Wash Programs and Options

- 7programmes:
- Eco Wash : Energy efficient wash and dry. Mixed loads and soil levels 45 °C,
- Auto Wash: automatic wash & dry for Mixed loads & soil levels 45-65 °C,
- Auto Gentle : Automatic wash and dry program for delicate and lightly soiled dishes 35-45 °C,
- Pots & Pans: for heavily soiled dishes 70 °C,
- Quick 1h: quick wash & dry for mixed loads & soil levels 65 °C,
- Express wash: Wash only for lightly soiled dishes 45 °C,
- Favourite: set or download your favourite combination 7
- 4 special options: Remote Start: allows remote control and monitoring via HomeConnect Extra Dry: Provides an even better drying result by extending the drying time HygienePlus : Extended increased temperature program for hygienic cleaning SpeedPerfect : Reduce wash time even after cycle has started
- Machine Care: maintains your dishwasher's optimum performance and hygiene option
- Add-On function via Home Connect app: Silence on demand

Performance

- Extra Clean Zone: Provides an even better cleaning result for items placed directly over the three rotating nozzles in the top basket
- Very quiet operation: 44 dB
- Extra quiet program with lower dB(A) Whisper Quiet: Operates at a low noise level of 44dB(A)
- HomeConnect via WiFi Connectivity
- 3 stage self-cleaning filter system: Design that helps reduce the need to wash the filter and prevents blockages

Flexibility

- VarioDrawer™: Provides an extra loading level for cutlery and utensils
- RackmaticPlus: 3-stage top basket can be adjusted to three height levels to maximise convenience
- Max flex basket system with red coloured touchpoints, easy to identify flexing and moving parts
- 2 foldable racks in top basket, Height of dishes in top basket - min/max 16.0 cm / 21.0 cm
- 6 foldable plate racks in bottom basket, Height of dishes in bottom basket - min/max 25.0 cm / 30.0 cm
- Moveable cutlery basket in lower basket
- 2 foldable cup shelves with soft silicone edges in top basket
- 6 foldable plate racks in bottom basket

Convenience

- InfoLight: program status indicator beams a red light onto the floor to let you know when the dishwasher is operating
- Time remaining display
- Audible program end
- Time delay start: Delay program start time by 1-24 hours to suit your schedule

Safety

- AquaStop Plus: Water supply device with lifetime anti-flood protection
- Rack Stopper to prevent derailing of bottom basket

Product Dimensions (H x W x D)

- Height 815-875 mm x Width 598 mm x Depth 550 mm

2 year warranty
https://www.bosch-home.com.au/metapages/warranty

Series 6, fully-integrated dishwasher, 60 cm
SMV6HCX03A

measurements in mm

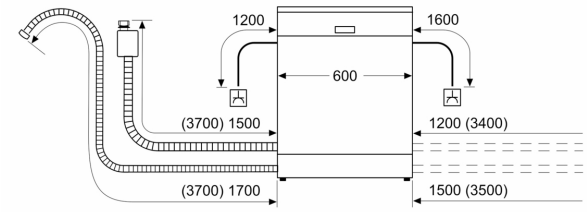

⊥ socket
( ) values with extension kit

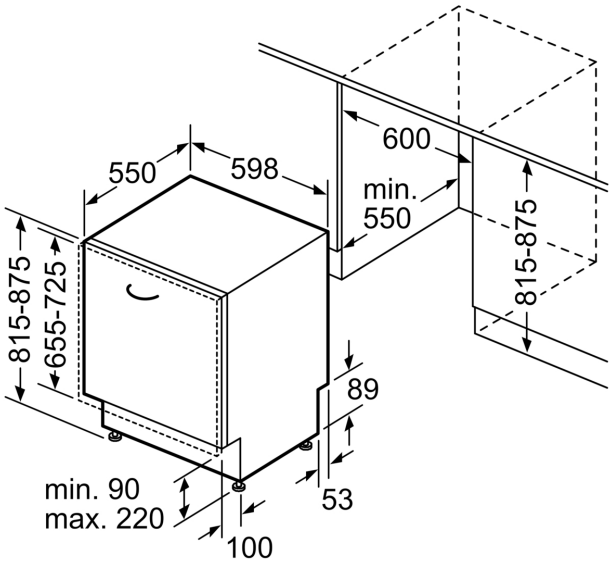

measurements in mm