Series 6, built-under dishwasher, 60 cm, Brushed steel anti-fingerprint SMU6HAS01A

Wifi connected dishwasher with an Extra Clean zone in the upper basket for heavily soiled dishes.

- **Extra Clean Zone**: Extra cleaning for items in your top basket.
- **Rackmatic**: Height-adjustable dishwasher basket for tall items.
- **EcoSilence Drive**: Especially energy-saving and silent in operation with a particularly high life span.
- **Extra Dry**: Selectable option for additional drying.
- **Dosage Assist**: Allows the tablet to dissolve steadily, ensuring spotless dishes without leftovers.

Maximum number of place settings:	14
Water consumption in litres per cycle of the eco programme:	11.4 l
Built-in / Free-standing:	Built-in
Height of removable worktop:	0 mm
Required niche size for installation (HxWxD):	815-875 x 600 x 550 mm
Depth with open door 90 degree:	1150 mm
Adjustable feet:	Yes - all from front
Maximum adjustability feet:	60 mm
Adjustable plinth:	Both horizontal and vertical
Net weight:	36.6 kg
Gross weight:	38.5 kg
Connection rating:	2400 W
Fuse protection:	10 A
Voltage:	220-240 V
Frequency:	50; 60 Hz
Length electrical supply cord:	175 cm
Plug type:	Standard 10 Amp plug
Length inlet hose:	165 cm
Length outlet hose:	190 cm
EAN code:	4242005279821
Installation type:	Built-under

SGZ0CL01	door lock mechancial, straight
SGZ1010	inlet and outlet hose extention
SMZ5150AU	Kick panel stainless steel
SMZ5300	GlassSecure Tray

4 242005 279821

Series 6, built-under dishwasher, 60 cm, Brushed steel anti-fingerprint SMU6HAS01A

Wifi connected dishwasher with an Extra Clean zone in the upper basket for heavily soiled dishes.

Capacity

- 14 place settings

Consumption rates

Design

- Stainless steel interior tub
- Anti-fingerprint stainless steel finish
- SoftTouch buttons: Electronic soft-touch activated buttons

Wash Programs and Options

- 8Programmes:
- Eco Wash : Energy efficient wash and dry. Mixed loads and soil levels,
- Auto Wash: automatic wash & dry for Mixed loads & soil levels,
- Auto Gentle : Automatic wash and dry program for delicate and lightly soiled dishes,
- Pots & Pans: for heavily soiled dishes,
- Quick 1h: quick wash & dry for mixed loads & soil levels,
- Express wash: Wash only for lightly soiled dishes,
- ExtraQuiet: Extended quiet wash and dry programme for mixed loads and soil levels,
- Favourite: Set or download your favourite combination (Pre-Rinse is set as default)
- 4 special options: Remote Start: allows remote control and monitoring via HomeConnect Extra Dry: Provides an even better drying result by extending the drying time HygienePlus : Extended increased temperature program for hygienic cleaning SpeedPerfect : Reduce wash time even after cycle has started
- Machine Care: maintains your dishwasher's optimum performance and hygiene option

Performance

- Extra Clean Zone: Provides an even better cleaning result for items placed directly over the three rotating nozzles in the top basket
- DosageAssist: Maximises the effectiveness of detergent tablets. The tablet is dropped into a specially engineered tray and is completely dissolved. For superior cleaning performance and a quieter wash.
- EcoSilence Drive® quiet and energy-efficient brushless motor (BLDC)BLDC Main Pump: Variable water and spray pressure to achieve optimum cleaning resultsBLDC Drain Pump: Fast and extra quiet draining of water, no gargling sounds
- AutoBrilliance™: Automatic detergent and rinse aid sensor
- hydryoDry heat exchanger assists with condensation to help dry dishes
- 5 Spray levels for maximum water contact and optimum wash results
- 3 stage self-cleaning filter system: Design that helps reduce the need to wash the filter and prevents blockages

Flexibility

- Max flex basket system with red coloured touchpoints, easy to identify flexing and moving parts
- RackmaticPlus: 3-stage top basket can be adjusted to three height levels to maximise convenience
- Ball bearing on top basket for an easy glide
- Low friction wheels on bottom basket
- Rack Stopper to prevent derailing of bottom basket
- 2 foldable racks in top basket, Height of dishes in top basket - min/max 22,0 cm / 27,0 cm
- 6 foldable plate racks in bottom basket, Height of dishes in bottom basket - min/max 25.0 cm / 30.0 cm
- Anti-slip protection strips in upper rack
- Moveable cutlery basket in lower basket

Convenience

- Very quiet operation: 44 dB
- HomeConnect via WiFi Connectivity
- Time remaining display
- Wash program status on display panel
- Time delay start: Delay program start time by 1-24 hours to suit your schedule
- Large item spray head: For washing extra large items such as baking trays, Vapour barrier protection plate

Safety

- AquaStop Plus: Water supply device with lifetime anti-flood protection

Product Dimensions (H x W x D)

- Height 815-875 mm x Width 598 mm x Depth 573 mm

Series 6, built-under dishwasher, 60 cm, Brushed steel anti-fingerprint
SMU6HAS01A

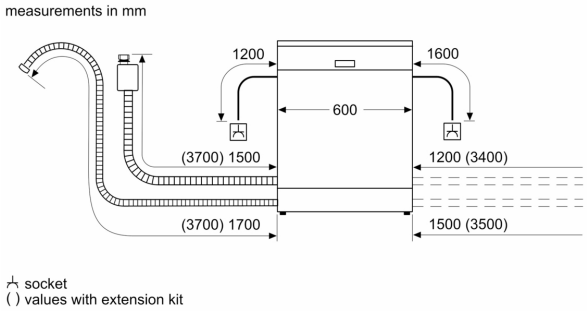

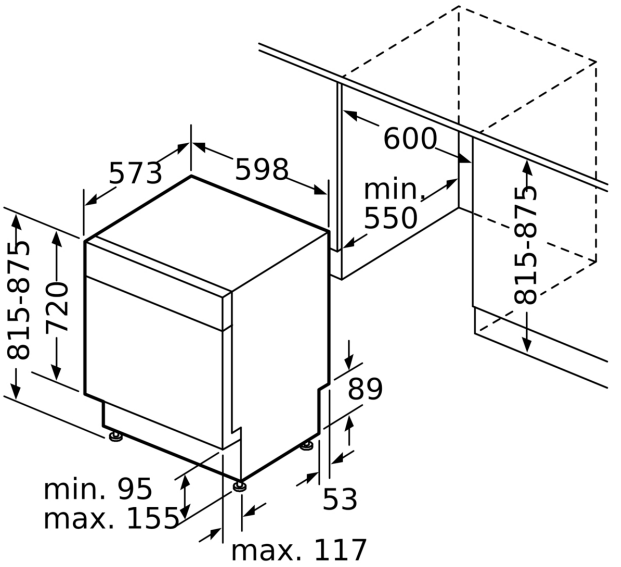

measurements in m