Series 8, fully-integrated dishwasher, 60 cm, Tall Tub, variohinge SBT8ZC801A

PerfectDry dishwasher with Zeolith Drying technology and Push-to-open door

- **Vario Hinge**: Leaving no gaps even in kitchens with low plinth heights and high built-in solutions.
- **PerfectDry**: 2x better drying results on plastics with PerfectDry dishwashers*.
- **Silence Plus**: The remarkably quiet 42 dB dishwasher.
- **Rackmatic**: Height-adjustable dishwasher basket for tall items.
- **Extra Clean Zone**: Extra cleaning for items in your top basket.

Maximum number of place settings:	15
Water consumption in litres per cycle of the eco programme:	12.2 l
Built-in / Free-standing:	Built-in
Height of removable worktop:	0 mm
Required niche size for installation (HxWxD):	865-925 x 600 x 550 mm
Depth with open door 90 degree:	1200 mm
Adjustable feet:	Yes - all from front
Maximum adjustability feet:	60 mm
Adjustable plinth:	Both horizontal and vertical
Net weight:	49.0 kg
Gross weight:	51.0 kg
Connection rating:	2400 W
Fuse protection:	10 A
Voltage:	220-240 V
Frequency:	50; 60 Hz
Length electrical supply cord:	175 cm
Plug type:	Standard 10 Amp plug
Length inlet hose:	165 cm
Length outlet hose:	190 cm
EAN code:	4242005457380
Installation type:	Integrated

SGZ1010	inlet and outlet hose extention
SGZ8BI00	Connection rail for divided furniture
SMZ5300	GlassSecure Tray

4 242005 457380

Series 8, fully-integrated dishwasher, 60 cm, Tall Tub, variohinge SBT8ZC801A

PerfectDry dishwasher with Zeolith Drying technology and Push-to-open door

Capacity

- Capacity: 15 place settings place settings

Consumption rates

- 4.5 Star Energy Rating energy rating, 5 Star Water rating (WELS).
- Water consumption of 12.2 litres per wash using Eco AU in accordance with AS/NZS 6400 and Energy consumption of 206 kWh per year using the Eco AU program seven times per week. Consumption is based on cold water connection and is tested in accordance with AS/NZS 2007.2

Design

- Stainless steel interior tub
- EmotionLight: Internal lighting for increased visibility
- High definition TFT display screen
- SoftTouch buttons: Electronic soft-touch activated buttons
- Hidden control buttons integrated into the top of the door
- Vario Hinge: The door hinge allows the decorative door panel to slide upwards while opening, allowing for reduced plinth height (minimum 5cm)
- Gap Illumination: The gap between the dishwasher door and kitchen cabinetry (upper left) discreetly glows when the dishwasher is in operation

Wash Programs and Options

- 8Programmes:
- Eco Wash : Energy efficient wash and dry. Mixed loads and soil levels,
- Auto Intensive: For pots and pans and baked-on food and grease,
- Auto wash: Wash and dry programme for mixed loads and soil levels,
- Auto Gentle: Automatic wash and dry program for delicate and lightly soiled dishes,
- Short wash: Quick wash and dry 89 min program for mixed loads and soil levels,
- Express wash: Wash only for lightly soiled dishes,
- ExtraQuiet: Extended quiet wash and dry programme for mixed loads and soil levels,
- Favourite: Set or download your favourite combination (Pre-Rinse is set as default)
- 5 special options:
- Remote Start: allows remote control and monitoring via HomeConnect,
- Extra Dry: Provides an even better drying result by extending the drying time,
- Intensive Zone: Intensive wash for items in the bottom basket,
- HygienePlus: Reduces bacteria from utensils & crockery,
- SpeedPerfect: Reduce wash time even after cycle has started
- Machine care program: maintains your dishwasher's optimum performance and hygiene Option
- Add-On function via Home Connect app: Silence on demand

Performance

- BrilliantDry PerfectDry: A unique and energy efficient drying technology that harnesses the power of Zeolith which absorb moisture molecules to provide table ready, streak free glass and tableware. Perfect for drying items that are usually very difficult to dry in a dishwasher such as plastics and sensitive glassware
- Heat Exchanger - Hygienic and efficient drying.
- AquaSensor™ technology: Regulates the water usage depending on the type and degree of soiling
- Extra Clean Zone: Provides an even better cleaning result for items placed directly over the three rotating nozzles in the top basket
- DosageAssist: Maximises the effectiveness of detergent tablets. The tablet is dropped into a specially engineered tray and is completely dissolved. For superior cleaning performance and a quieter wash.
- EcoSilence Drive® quiet and energy-efficient brushless motor (BLDC)BLDC Main Pump: Variable water and spray pressure to achieve optimum cleaning resultsBLDC Drain Pump: Fast and extra quiet draining of water, no gargling sounds
- AutoBrilliance™: Automatic detergent and rinse aid sensor
- 3 stage self-cleaning filter system: Design that helps reduce the need to wash the filter and prevents blockages
- 5 Spray levels for maximum water contact and optimum wash results
- Very quiet operation: 42 dB

Flexibility

- VarioDrawer Pro: Third loading level for cutlery and utensils
- Max Flex Pro basket system with red coloured touchpoints, easy to identify flexing and moving parts
- RackmaticPlus: 3-stage top basket can be adjusted to three height levels to maximise convenience
- 6 foldable plate racks in top basket, Height of dishes in top basket - min/max 18,0 cm / 23,0 cm
- 8 foldable plate racks in bottom basket, Height of dishes in bottom basket - min/max 33,0 cm / 28,0 cm
- 2 foldable cup shelves with soft silicone edges in top basket
- Glass rack in lower basket for tall stemmed glasses
- Moveable cutlery basket in lower basket
- Rack Stopper to prevent derailing of bottom basket
- Anti-slip protection strips in upper rack
- 12.2 l water consumption per wash based on Cold water connection, using Eco Wash program. In accordance with AS/NZS 6400

Convenience

- DoorOpen Assist - a push to open door system, perfect for handleless kitchens
- HomeConnect via WiFi Connectivity
- Time delay start: Delay program start time by 1-24 hours to suit your schedule
- Audible program end
- Large item spray head: For washing extra large items such as baking trays, Vapour barrier protection plate

Safety

- Child-proof door lock (double push to open)
- AquaStop Plus: Water supply device with lifetime anti-flood protection

Product Dimensions (H x W x D)

- Height 865-925 x Width 598 mm x Depth 550 mm

Series 8, fully-integrated dishwasher, 60 cm, Tall Tub, variohinge
SBT8ZC801A

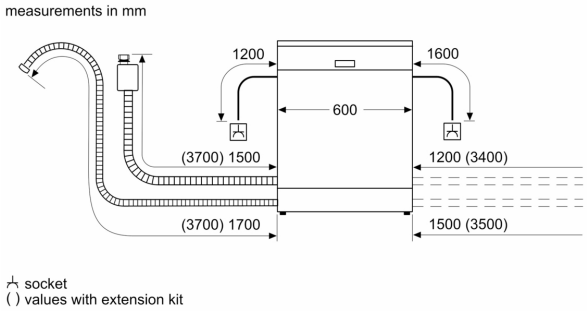

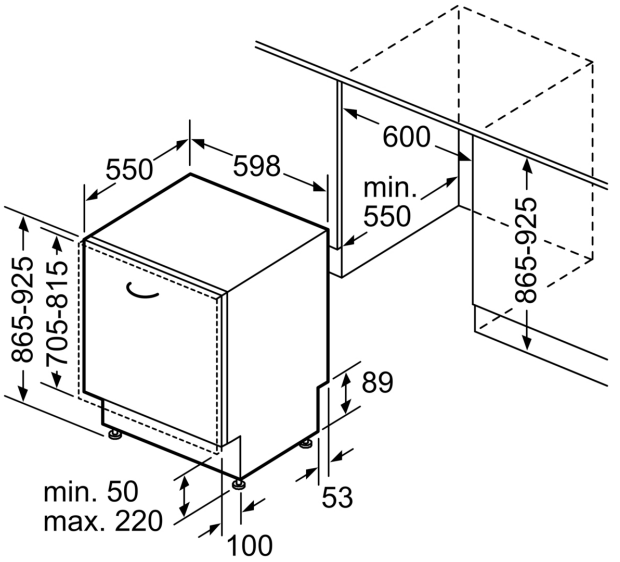

measurements in mm