SIEMENS

iQ700, integrated rangehood, 86 cm, Stainless steel
LB89586AU

The powerful canopy rangehood is concealed above the cooktop.

- ✓ iQdrive motor - The quiet, high-performance motor ensures efficient removal of odours and steam.
- ✓ LED light: Optimal visibility and atmosphere when cooking.
- ✓ The highly efficient 800 m3/h extraction rate provides ideal air quality in the kitchen.
- ✓ The intensive setting temporarily increases the extraction rate when kitchen vapour is especially intense, with automatic revert to previous setting after 6 min.

LZ55651	Standard odor filter (replacement)
LZ55750	Standard recirculation kit
LZ75956	Remote control
LZ10ITP00	Long Life odor filter (replacement)
LZ11ITD11	Long Life recirculation kit external
LZ11IXB16	Clean Air Plus odor filter (replacement)
LZ11IXC16	Clean Air Plus recirc. kit external

Typology: ..... Built-in/Built-under
Length electrical supply cord: ..... 150.0 cm
Min. required niche size for installation (HxWxD): ..... 418mm x 836.0mm x 264mm mm
Minimum distance above an electric cooktop: ..... 600 mm
Minimum distance above a gas cooktop: ..... 650 mm
Net weight: ..... 9.7 kg
Type of control: ..... Electronic
Number of power settings: ..... 3-stages + intensive setting
Max. ducted extraction: ..... 610 m³/h
Boost position output recirculating: ..... 727 m³/h
Max. recirculation: ..... 563 m³/h
Boost position air extraction: ..... 800 m³/h
Number of lights: 2
Noise level: ..... 64 dB(A) re 1 pW
Diameter of air outlet: ..... 120 / 150 mm
Grease filter material: ..... Washable aluminium
EAN code: 4242003848241
Power supply: ..... 172 W
Fuse protection: ..... 3 A
Voltage: ..... 220-240 V
Frequency: ..... 50 Hz
Plug type: ..... AU plug
Installation type: ..... Built-in

4 242003 848241

SIEMENS

iQ700, integrated rangehood, 86 cm, Stainless steel
LB89586AU

Design & Innovation
- Appliance colour: Stainless steel
- Electronic controls with low-lift push buttons
- 2 x 1 Watt LED lights
- metal grease filters with stainless steel cover
- Accessory required for recirculation mode: Standard recirculation kit

Convenience
- For installation in a kitchen cabinet
- Saturation display for filters

Power and Mode of Operation
- Extraction rate according to EN 61591 ø 15 cm: max. Normal use 610 m³/h. Intensive 800 m³/h
- Extraction rate in recirculation mode:
- Max. normal use:310m³/h
- Intensive:380 m³/h
- 3 power levels plus intensive setting
- Intensive operation automatic revert - 6min
- Automatic run on time - 30 min
- Rim ventilation
- Efficient BLDC technology
- Suitable for ducted and re-circulating operation

Cleaning
- Dishwasher safe metal grease filters
- Cassette with alu frame
- Noise level according to EN 60704-3 exhaust air:
- Max. normal use:64dB(A) re 1 pW
- Intensive:70 dB(A) re 1 pW
- with one-way flap: prevents outside air from entering your kitchen

Technical Information
- Built-in dimensions: width: 84 cm, depth: 26 cm
- Dimensions exhaust air (HxWxD): 418-418 x 860 x 282 mm
- 120 or 150 mm tube connection diameter
- Power rating: 172 W
- Electrical cable length 1.5 m
- Average Energy Consumption: 25.5 kWh/year

SIEMENS

iQ700, integrated rangehood, 86 cm, Stainless steel
LB89586AU

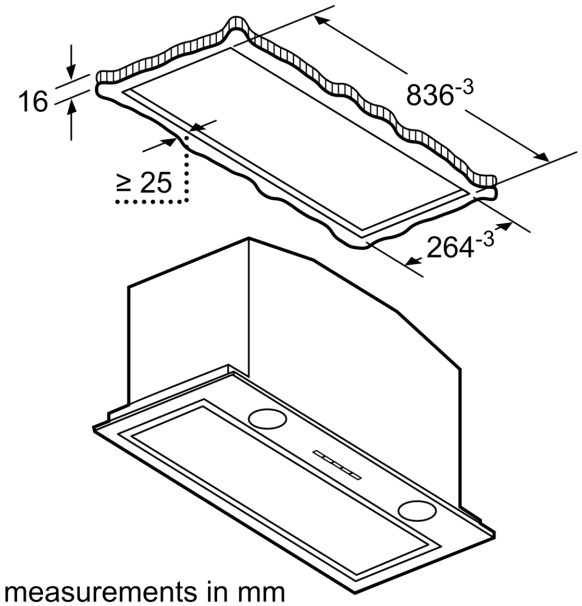

measurements in mm

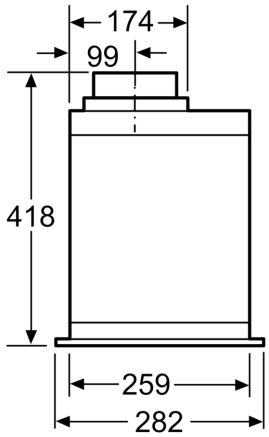

measurements in mm

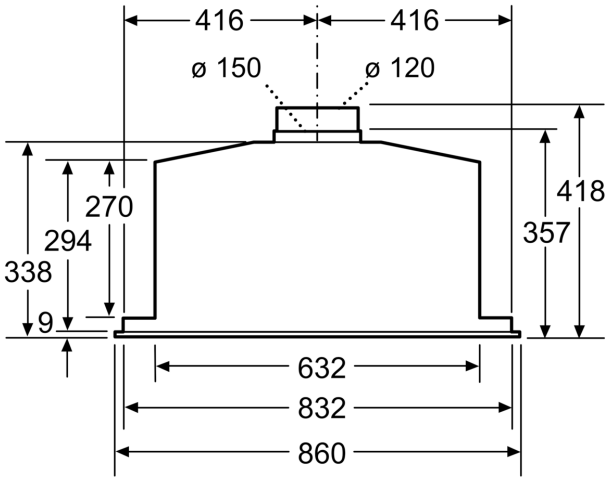

measurements in mm

Measurements in mm

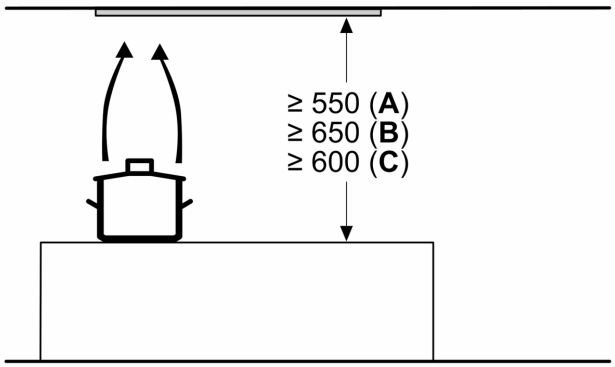

A: Electric

B: Gas - from upper edge of pan support

C: Electric - for Australia and New Zealand