Series 6, built-in fridge-freezer with freezer at bottom, 177.2 x 55.8 cm, SoftClose flat hinge
KIN86AD30A

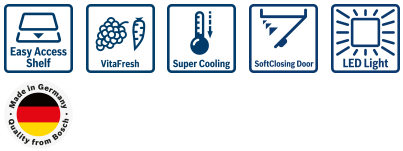

The bottom freezer with VitaFresh plus drawer: keeps your fruit and vegetables fresher for longer.

- **Easy Access Shelf**: Pull-out glass shelf gives you better access to the contents of your fridge.
- **VitaFresh**: vitamin rich fruit & vegetables stay fresh for longer in a climate controlled drawer.
- **Super Cooling**: lowers the temperature in your fridge temporarily, so added items are cooled faster.
- **SoftClosing Door**: It closes quietly and automatically for a seamless and comfortable experience.
- **Keep your groceries in perfect view.**

Annual energy consumption AU:	276 kWh
Total unit net capacity:	254 l
Freezer Net capacity:	67 l
Built-in / Free-standing:	Built-in
Door panel options:	Not possible
Height:	1772 mm
Width of the appliance:	558 mm
Depth of the product:	545 mm
Required niche size for installation (HxWxD):	1775x560x550 mm
Net weight:	72.0 kg
Connection rating:	90 W
Fuse protection:	10 A
Door hinge:	Right reversible
Voltage:	220-240 V
Frequency:	50 Hz
Length electrical supply cord:	230 cm
Storage Period in Event of Power Failure:	9 h
Number of compressors:	1
Number of independent cooling systems:	2
Interior ventilator:	Yes
Reversible Door Hinge:	Yes
Number of Adjustable Shelves in fridge compartment:	4
Shelves for Bottles:	No
Frost free system:	Freezer
Installation type:	Integrated

4 242005 141319

Series 6, built-in fridge-freezer with freezer at bottom, 177.2 x 55.8 cm, SoftClose flat hinge
KIN86AD30A

The bottom freezer with VitaFresh plus drawer: keeps your fruit and vegetables fresher for longer.

Performance & Consumption

- Bosch Built-In refrigerator -- A premium quality product designed and manufactured in Germany
- 3.5 Energy Stars Rating, 276 kWh energy consumption per year
- Noise level: 38 dB(A)
- Net capacity: 254 litres

Design

- LED interior light in fridge section

Convenience & Safety

- 1 VitaFresh plus drawer with humidity control - Fruits and vegetables retain vitamins and stay fresher for longer.
- Electronic controls make it easier to set the temperature and features of your refrigerator
- 7 segment electronic control
- Constant temperature by intelligent sensor technology
- SuperCooling Function - Automatically brings down the temperature of the refrigerator to cool new groceries rapidly
- SuperFreezing function - Automatically brings down the temperature of the freezer to cool new items rapidly
- Holiday mode
- Acoustic door open alarm
- Active Warning System by Temperature increase, Failure Memory Function

Shelving & Compartments

- 5 safety glass shelves (4 height adjustable), Bottom shelf, Extendable glass shelf
- 5 door bins, 1x dairy compartment

Freezer Compartment

- NoFrost - no more defrosting!
- Freezing capacity: 8 kg in 24 hours
- Storage time in power failure: 13 h
- Safety glass
- 3 transparent freezer drawers, incl.1 Big Box

Dimensions

- Dimensions (H x W x D): 1772 mm x 558 mm x 545 mm
- Cut-out Dimension (H x W x D): 1775 mm x 560 mm x 550 mm

Technical Information

- Reversible door hinge
- Voltage 220 - 240 V
- Transportation handles

Accessories

- 2 x cold pack, ice cube tray
- bottle holder in door tray

Comfort

- Multiairflow system - Minimises fluctuating temperatures by ensuring optimal and uniform air circulation in the fridge

Refrigerator Type and Volume

- Gross Capacity: 273 litres
- Fridge gross capacity: 189 litres
- Freezer gross capacity: 84 litres

General Data

- Gross Weight: 76.95
- Net Weight: 72.036

Cooling System

- Automatic defrost cooling system
- Power ventilation for uniform air circulation

Fridge Compartment

- 1 VitaFresh plus drawer with humidity control - Fruits and vegetables retain vitamins and stay fresher for longer.
- 5 safety glass shelves
- LED illumination in fridge
- 1 Large door trays (Large)
- 3 Small door trays (Small)
- 1 Dairy Compartment

Freezer Compartment

- No frost freezer
- 3 Pull-out drawers for storage, including 1 Big Box for storing large items
- Freezing Capacity: 8 kg/ 24h

Series 6, built-in fridge-freezer with freezer at bottom, 177.2 x 55.8 cm, SoftClose flat hinge
KIN86AD30A

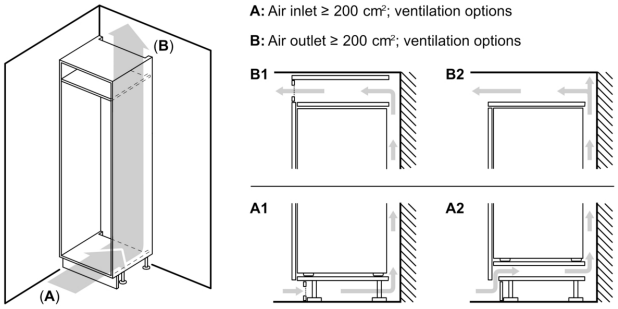

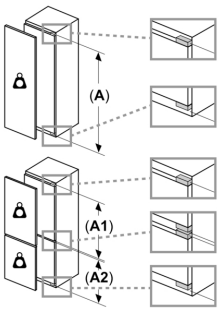

Maximal permissible weight of the unit fronts

Fitted unit fronts that exceed the permissible weight may cause damage and result in functional impairment of the hinges

Weight
A: Appliance door height including hinges in mm

B: Undamped hinge, unit front in kg

C: Damped hinge, unit front in kg

D: Additional possible load in kg with heavy load kit

A	B	C	D
1500-1750	22	22	B+5 / C+5
720-1400	19	19	
A1	15	19	
A2	15	19	

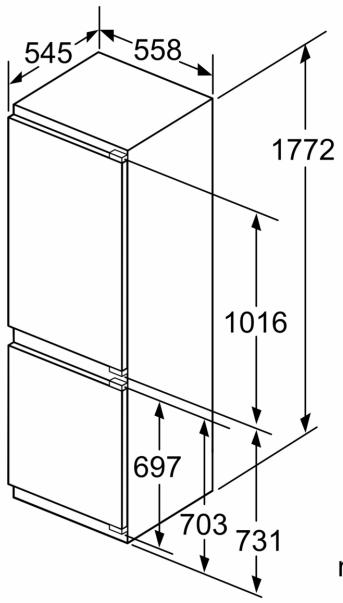

measurements in mm

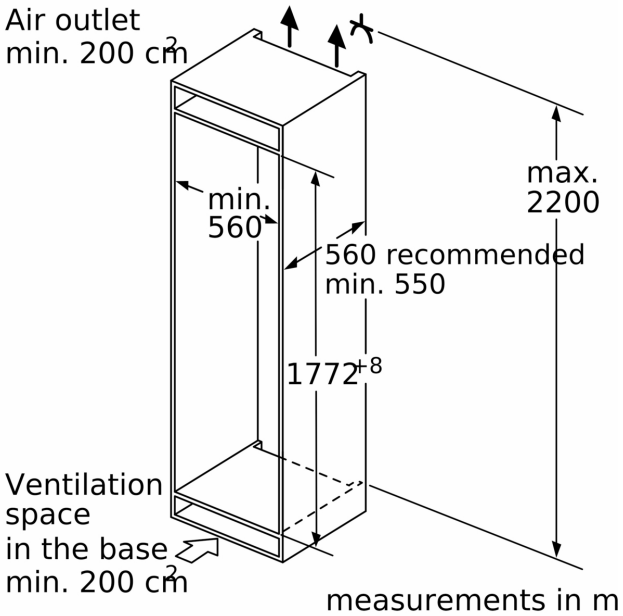

measurements in m

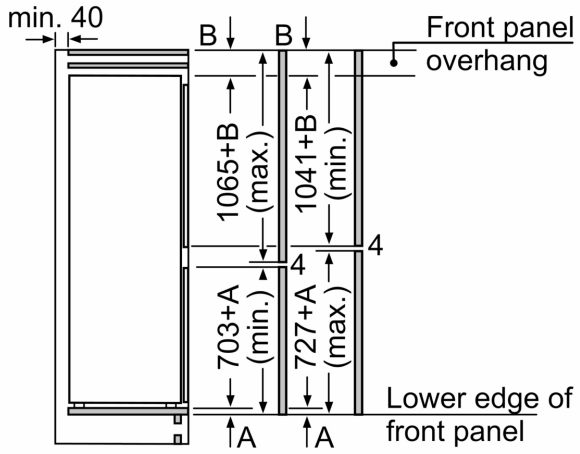

The specified unit door dimensions are valid for a door gap of 4 mm.

measurements in mm

measurements in mm
Recommended gap dimensions for flat hinges

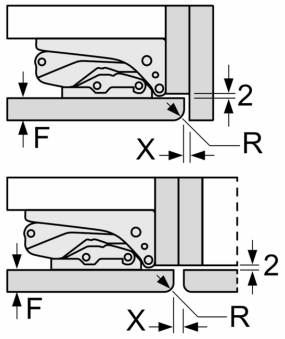

F	R	X
16-19	0-3	2.5
20	0-1	3
	2-3	2.5
21	0-1	3
	2-3	2.5
22	0	4
	1	3.5
	2-3	3

The gap dimensions recommended in the table must be adhered to in order to ensure that appliance doors do not collide with anything when they are opened, and to avoid causing damage to kitchen units.