Series 4, Multi Door Fridge Freezer, 183 x 90.5 cm, Brushed steel KFN96VPEAA

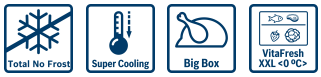

The refrigerator with VitaFresh Box: thanks to the cooling compartment, your fruits and vegetables stay fresh longer.

- **Never defrost again & no drops on the back wall.**
- **Cools new food placed inside faster, thus protecting already cooled food.**
- **BigBox drawer**: For stacking storage containers or for large frozen food items.
- **VitaFresh XXL <0°C>**: Keeps food fresh for longer in extra-large climate-controlled fridge drawers.
- **Electronic temperature control**: Precise fridge settings to lock in freshness.

Annual energy consumption AU:	395 kWh
Total unit net capacity:	605 l
Refrigerator Net capacity:	405 l
Freezer Net capacity:	200 l
Airborne acoustical noise emissions:	38 dB(A) re 1 pW
Noise level class:	C
Built-in / Free-standing:	Free-standing
Door panel options:	Not possible
Height:	1830 mm
Width of the appliance:	905 mm
Depth of the product:	731 mm
Required niche size for installation (HxWxD):	GENERAL.N_A mm
Net weight:	116.9 kg
Fuse protection:	10 A
Door hinge:	Left and Right
Voltage:	220-240 V
Frequency:	50 Hz
Length electrical supply cord:	240 cm
Storage Period in Event of Power Failure:	15 h
Number of compressors:	1
Number of independent cooling systems:	1
Interior ventilator:	Yes
Reversible Door Hinge:	No
Number of Adjustable Shelves in fridge compartment:	2
Shelves for Bottles:	No
Frost free system:	Fridge and freezer
Installation type:	Free-standing

4 242005 338450

Series 4, Multi Door Fridge Freezer, 183 x 90.5 cm, Brushed steel KFN96VPEAA

The refrigerator with VitaFresh Box: thanks to the cooling compartment, your fruits and vegetables stay fresh longer.

- Total No Frost - never defrost again and no water on the fridge back wall
- Freestanding Freezer with Stainless steel doors with EasyClean finish

Performance & Consumption

- Multiairflow system - Minimises fluctuating temperatures by ensuring optimal and uniform air circulation in the fridge
- Total Volume : 605 l
- Net Fridge Volume : 405 l
- Net Freezer Volume : 200 l
- Annual Energy Consumption: 395 kWh (4.5 Star Energy Rating. When tested in accordance with AS/NZS IEC 62552-3. Actual energy use and running costs will depend on how you use the appliance.)
- Climate Class: SN-T
- Fast Freeze
- Noise Level : 38 dB

Finish

- Stainless steel doors with EasyClean finish doors and Metallic chrome side panels

Design

- LED interior light in fridge section
- White glossy backwall with Multi-Airflow
- Interior design with metal trims

Convenience & Safety

- 7 segment electronic control
- SuperCooling Function - Automatically brings down the temperature of the refrigerator to cool new groceries rapidly
- Automatic defrost in fridge section
- acoustic for Fridge and Freeze, Optical warning system Door open
- Acoustic Warning System, Optical Warning System by Temperatur increase

Shelving & Compartments

- FrostFree MultiAirflow system
- 3 safety glass shelves of which 2 are height adjustable, Standard 2 shelves extendable
- 2 door bin(s) large, 2 door bin(s) small
- Egg rack
- 1 VitaFresh 0 °C drawer - Fish and meat stay fresh
- 1 VitaFresh drawer on rails with humidity control - Fruits and vegetables retain vitamins and stay fresh for longer.

Freezer Compartment

- Freezer: 2 transparent drawers with telescopic rails
- Ice cube tray

Dimensions

- Dimensions (H x W x D): 1830 mm x 905 mm x 731 mm

Technical Information

- 4 wheels for easier transport, 3 of them height adjustable.
- Voltage 220 - 240 V

Accessories

- 1 x ice cube tray

Series 4, Multi Door Fridge Freezer, 183 x 90.5 cm, Brushed steel
KFN96VPEAA

Measurements in mm

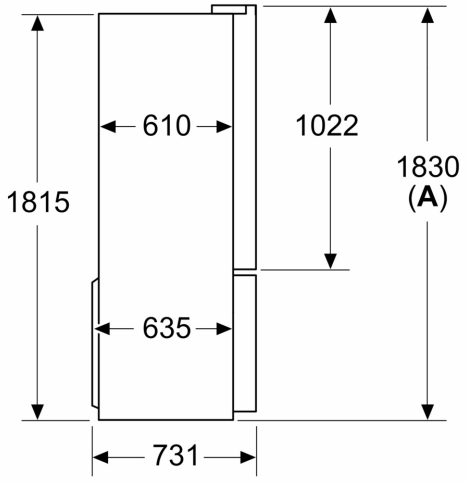

A: Front is adjustable 1830–1847 mm, with front levelling feet fully extended

Measurements in mm

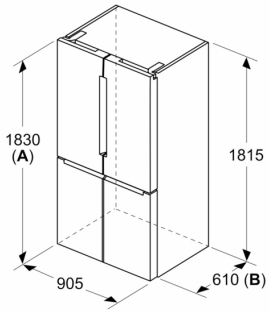

A: Front is adjustable 1830–1847 mm, with front levelling feet fully extended

B: Add 25 mm for fixed spacers on back

Measurements in mm

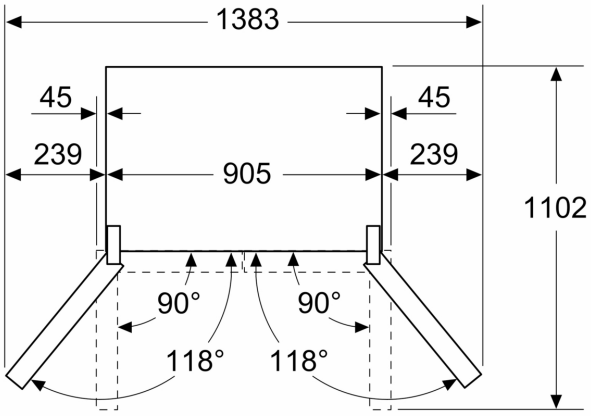

Measurements in mm

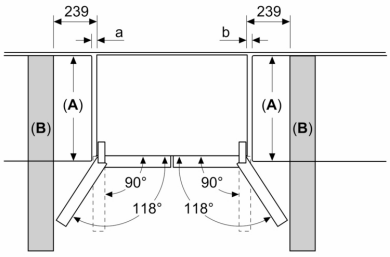

A	a	b
≤ 600	0	0
600 < A ≤ 650	45	45
650 < A ≤ 700	60	60
> 700	239	239

A: Kitchen cabinet or worktop depth

B: Wall
Drawers can be pulled and taken out with door open to 90°