Series 6, Multi Door Fridge Freezer, 183 x 90.5 cm, Brushed black steel anti-fingerprint, Total NoFrost KFD96AXEAA

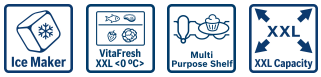

The Multi Door fridge freezer combination: step into a XXL world of freshness with VitaFresh <0°C> XXL. Say goodbye to defrosting headaches and hello to an endless supply of filtered water and ice at your fingertips.

- **Ice and Water Dispenser with Tap Connection**: Dispense water and ice.
- **VitaFresh XXL <0°C>**: Keeps food fresh for longer in extra-large climate-controlled fridge drawers.
- **Bottle Fill**: Fill your favourite glass or bottle hands-free using bottle fill technology.
- **Multi Purpose Shelf**: more flexibility to store different items.
- **Big on space. Big on freshness.**

Annual energy consumption AU:	425 kWh
Total unit net capacity:	574 l
Refrigerator Net capacity:	375 l
Freezer Net capacity:	200 l
Airborne acoustical noise emissions:	38 dB(A) re 1 pW
Noise level class:	C
Built-in / Free-standing:	Free-standing
Door panel options:	Not possible
Height:	1830 mm
Width of the appliance:	905 mm
Depth of the product:	731 mm
Required niche size for installation (HxWxD):	GENERAL.N_A mm
Net weight:	138.1 kg
Fuse protection:	10 A
Door hinge:	Left and Right
Voltage:	220-240 V
Frequency:	50 Hz
Length electrical supply cord:	240 cm
Storage Period in Event of Power Failure:	15 h
Number of compressors:	1
Number of independent cooling systems:	1
Interior ventilator:	Yes
Reversible Door Hinge:	No
Number of Adjustable Shelves in fridge compartment:	4
Shelves for Bottles:	Yes
Frost free system:	Fridge and freezer
Installation type:	Free-standing

4 242005 377817

Series 6, Multi Door Fridge Freezer, 183 x 90.5 cm, Brushed black steel anti-fingerprint, Total NoFrost KFD96AXEAA

The Multi Door fridge freezer combination: step into a XXL world of freshness with VitaFresh <0°C> XXL. Say goodbye to defrosting headaches and hello to an endless supply of filtered water and ice at your fingertips.

- Total No Frost - never defrost again and no water on the fridge back wall

Design

- Brushed black steel anti-fingerprint doors and cast iron look side panels

Performance & Consumption

- 4 Stars (AU).
- Energy consumption 425 kWh/year.
- Net capacity, total: 574 l
- Net Freezer Volume : 200 l
- Noise Level : 38 dB
- LED interior light lighting

Convenience & Safety

- Separate temperature control for cooling and freezing section
- 7 segment electronic control
- Child lock, Sabbat-Mode, Economy setting, Holiday mode
- Home Connect: Remote Monitoring and Control
- SuperCooling Function - Automatically brings down the temperature of the refrigerator to cool new groceries rapidly
- 1 VitaFresh drawer on rails with humidity control - Fruits and vegetables retain vitamins and stay fresh for longer.
- , 1 VitaFresh 0°C drawer - Fish and meat stay fresh
- Fridge : 5 non-spill safety glass shelves, 4 height-adjustable
- acoustic for Fridge and Freeze, Optical warning system Door open

Ice and Water

- Automatic ice cube maker
- ice product.rate/day icem kg: 5 kg

Freezer Compartment

- Fast freeze function - Automatically brings down the temperature of the freezer to cool new items rapidly
- Freezing capacity 24h: 13 kg
- FreezerLight

Technical Information

- Climate Class: SN-T
- Voltage 220 - 240 V
- Connection Length (water supply):200 cm
- Length of power cord: 240 cm

Dimensions

- Dimensions (H x W x D): 1830 mm x 905 mm x 731 mm

Series 6, Multi Door Fridge Freezer, 183 x 90.5 cm, Brushed black steel anti-fingerprint, Total NoFrost
KFD96AXEAA

Measurements in mm

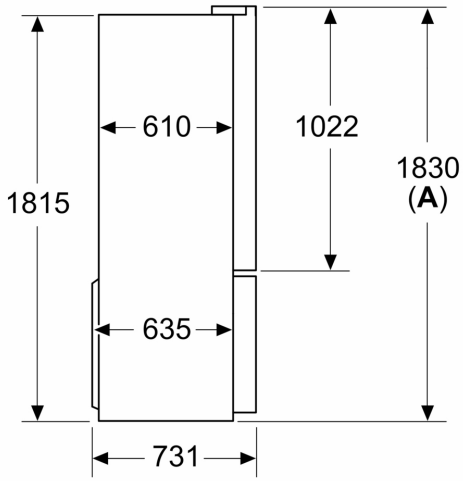

A: Front is adjustable 1830–1847 mm, with front levelling feet fully extended

Measurements in mm

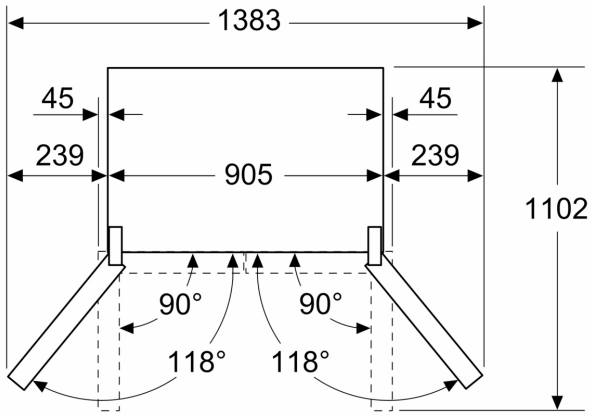

Measurements in mm

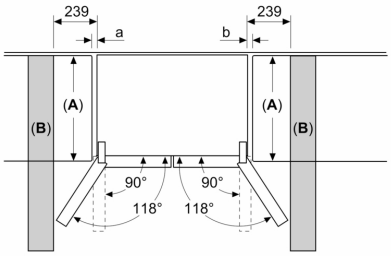

A	a	b
≤ 600	0	0
600 < A ≤ 650	45	45
650 < A ≤ 700	60	60
> 700	239	239

A: Kitchen cabinet or worktop depth

B: Wall
Drawers can be pulled and taken out with door open to 90°

Measurements in mm

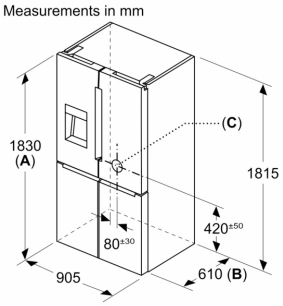

A: Front is adjustable 1830–1847 mm, with front levelling feet fully extended

B: Add 25 mm for fixed spacers on back

C: Water connection position