SIEMENS

iQ700, Built-In Fully Automatic Coffee Machine, Black CT836LEB6

Built-in coffee center with Home Connect for perfect coffee indulgence with highest comfort.

- ✓ Less bitter tasting extra-strong coffee thanks to the aromaDouble Shot double grinding and brewing process.
- ✓ Fully automatic steam cleaning and optimal hygiene thanks to autoMilk Clean.
- ✓ Grind the perfect aroma out of every bean and long-life guarantee with ceramDrive.
- ✓ Any drink at the touch of a button - prepare even two milk specialities at the same time with oneTouch DoubleCup.
- ✓ Easily prepare every coffee and milk beverage at the touch of a button with the oneTouch function.

Accessories

TZ70003	1 x Brita Filter for EQ Coffee Machine
TZ80001A	Cleaning tablets
TZ80001B	10 x Cleaning Tablets for EQ Coffee Mach
TZ80002A	Descaling tablets
TZ80002B	3 x Descaling Tablets for EQ Coffee Mach
TZ80004A	Care set espresso
TZ80004B	Care Set for EQ Coffee Machines
TZ80009N	Insulated milk container

Technical data

Built-in / Free-standing: ..... Built-in
Net weight: ..... 20.1 kg
Gross weight: ..... 22.6 kg
Dimensions (HxWxD): ..... 455 x 594 x 385 mm
Dimensions of the packed product: ..... 540 x 478 x 670 mm
Min. required niche size for installation (HxWxD): .. 449 x 558 x 356 mm
EAN code: 4242003800171
Fuse protection: ..... 10 A
Voltage: ..... 220-240 V
Frequency: ..... 50/60 Hz
Length electrical supply cord: ..... 170.0 cm

4 242003 800171

SIEMENS

iQ700, Built-In Fully Automatic Coffee Machine, Black CT836LEB6

Flavour
- Innovative SensoFlow heating system - Fast first cup
- One-touch preparation: Ristretto, Espresso, Espresso macchiato, Coffee, Cappuccino, Latte macchiato, Caffé Latte at the touch of a button
- aromaDouble Shot: Extra-strong coffee with less bitterness thanks to two grinding and brewing processes
- Beverage temperature individually adjustable: 3 coffee temperature levels, Hot water: 4 grades
- Waterfilter inside Brita intenza water filter: Reduces the lime content of water and filters substances affecting smell and taste

Design

Convenience
- 4.1" TFT display with interactive menu
- MyCoffee: Save favourite beverages with individual names and adjustable mixing ratio of milk and espresso
- individualCup Volume: Cup sizes adjustable individually (20-250 ml), to ensure your cup gets filled just as far as you would like it to (20-250 ml)
- Coffee outlet and milk frother height-adjustable: Up to 15 cm (max) high Latte Macchiato glasses fit underneath
- OneTouch DoubleCup: Prepare two cups simultaneously for all coffee and milk specialities
- Removable 2.4 litre water tank
- Early warning when bean container or water tank are close to empty
- Flexible milk solution: Decide for yourself if you prefer connecting the provided milk container or using any other container, e.g. a milk carton
- Short user manual always at hand inside appliance

Performance
- silentCeram Drive: High-value ceramic grinding unit
- coffeeSensor System: The grinding unit automatically adjusts to bean variety
- One-touch coffee milk specialities with especially fine-pored milk froth thanks to an innovative milk frother
- In addition to beverages also available separately: milk foam, warm milk, hot water
- Reduced heating-up time: fastest first cup!
- Water pump with 19 bar pressure
- Separate chute for pre-ground coffee
- 15.000 cup warranty: Consistently high appliance quality from the first cup to the 15,000th (valid for non-commercial use within 24 months)

Hygiene
- Removable brewing unit: Easy and hygienic cleaning under running water
- steam blast: Fully-automatic steam cleaning of the milk system after every beverage
- All milk nozzle parts are easily removable, separable, easy to clean and dishwasher-proof
- singlePortion Cleaning: Complete emptying of all pipes after each brewing process
- Automatic rinsing program when switched on or off
- Removable drip tray with container for coffee dregs
- Fully automatic descaling & cleaning program calc'nClean
- Temperature adjustment

Extras
- Containers for water, milk and coffee beans are easily accessible but hidden behind a door, so the kitchen always looks clean
- Bean container with aroma protection lid (500 g volume)
- Illumination for keys and coffee outlet
- Grinding fineness adjustable (multi-level)
- Convenient quick rinsing function
- Child-proof lock: key lock preventing unintended brewing cycle
- Power 1700 W

Accessories
- Insulated milk container with FreshLock lid (0.5 l volume)
- Included accessories: assembly screws, connection hose for milk frother, milk container (insulated), milk pipe, scoop, test strip, water filter cartridge
- Separately available accessories: cleaning tablets (TZ80001), descaling tablets (TZ80002), BRITA Intenza water filter (TZ70003), care set for fully-automatic espresso makers (TZ80004), insulated milk container (TZ80009N)

SIEMENS

iQ700, Built-In Fully Automatic Coffee Machine, Black
CT836LEB6

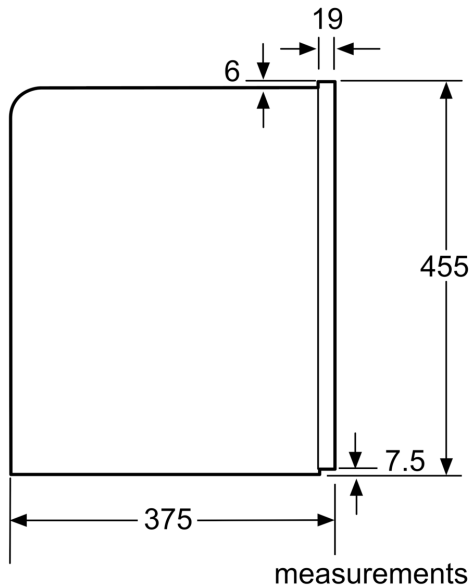

measurements in mm

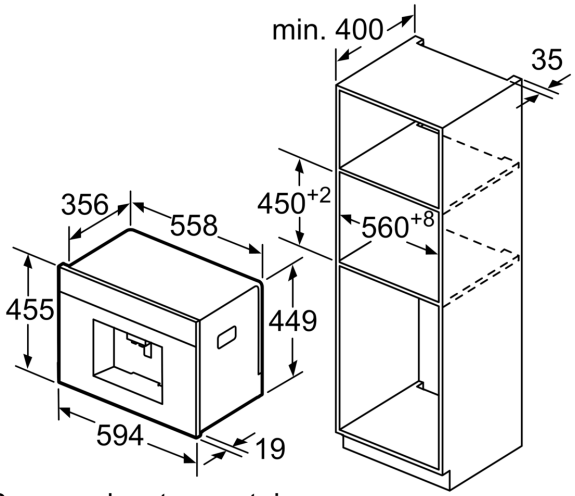

Bean and water containers are removed from the front. Recommended installation height 95-145 cm.

measurements in mm

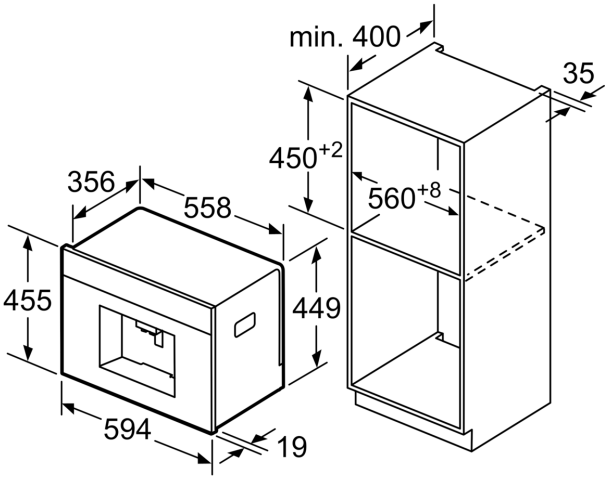

Bean and water containers are removed from the front. Recommended installation height 95-145 cm.

measurements in mm

left corner installation

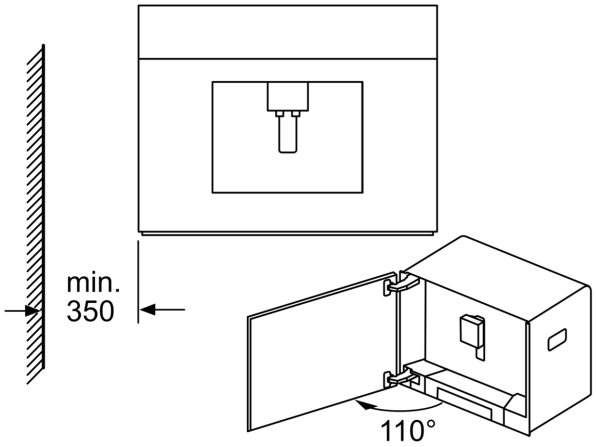

If using the 92° hinge limiter (spare part no. 00636455), the minimum distance to the wall is only 100 mm.

measurements in mm
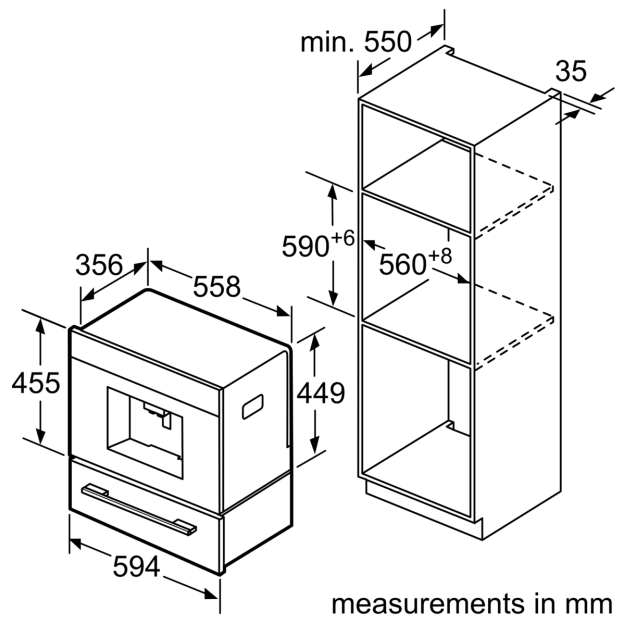
SIEMENS