CEM305TB
30-INCH ELECTRIC COOKTOP
MASTERPIECE® COLLECTION

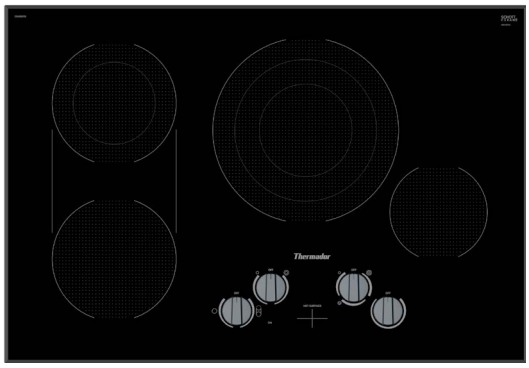

FEATURES & BENEFITS

★ - Dual zone bridge element accommodates oblong cookware and multiple diameter sizes

- Triple zone center element allows you to match element size to various sized cookware
- Variable 9-stage power setting offers a range of power from high heat to simmer
- Cooktop indicates when elements are still hot
- Heavy-duty stainless steel metal knobs provide precise control

ACCESSORIES (OPTIONAL)

CHEFSPAN08
10" Stainless Steel Pan

GENERAL PROPERTIES	
Controls	Metal Knobs
ELEMENT PERFORMANCE	
Power of Front Left Heating Element	1,700 W
Power of Back Left Heating Element	1,700 / 700 W
Power of Bridge Element	4,000 W
Power of Center Heating Element	3,080 / 2,200 / 1,050 W
Power of Back Right Heating Element	N/A
Power of Front Right Heating Element	1,200 W
ELEMENT SIZE	
Dimension of Front Left Heating Element	7"
Dimension of Back Left Heating Element	7", 5"
Dimension of Center Heating Element	11", 8", 6"
Dimension of Back Right Heating Element	N/A
Dimension of Front Right Heating Element	6"
TECHNICAL DETAILS	
Watts (W)	8,200 W
Circuit Breaker (A)	40 / 30 A
Volts (V)	240 / 208 V
Frequency (Hz)	60 Hz
Plug Type	No Plug
Conduit	38" Flexible 3-Wire
Energy Source	Electric
DIMENSIONS & WEIGHT	
Overall Appliance Dimensions (HxWxD) (in)	7/16"+3 15/16" x 31" x 21 1/4"
Required Cutout Size (HxWxD) (in)	3 15/16" x 28 3/4" x 19 7/8"
Minimum Distance From Counter Front (in)	2 1/4"
Minimum Distance From Rear Wall (in)	2 3/4"
Net Weight (lbs)	26 lbs
WARRANTY	
Limited Warranty, Entire Appliance, Parts and Labor	2 Year

†To be fully ADA compliant, these units must be installed according to ADA guidelines. Please check current ADA requirements for guidance on installation.

★ THERMADOR® EXCLUSIVE

CEM305TB
30-INCH ELECTRIC COOKTOP
MASTERPIECE® COLLECTION

30-INCH ELECTRIC COOKTOP AND CUTOUT DIMENSIONS

Measurements in inches (mm)

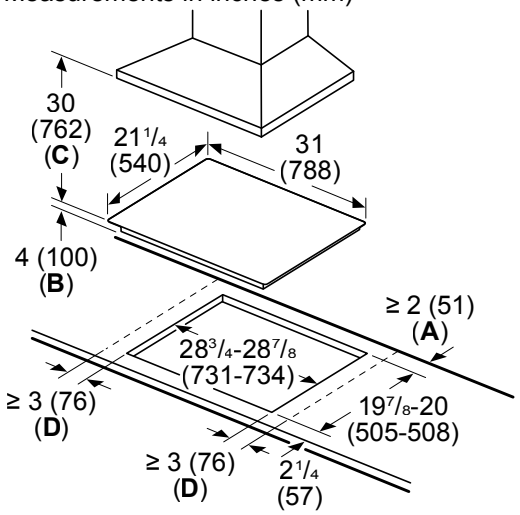

A: Min. distance from the cooktop cut-out to the wall

B: Max. recessed depth

C: Min. distance between the surface of the cooktop and the underside of the ventilation hood
This distance can be smaller, check installation instructions of ventilation hood

D: Min. distance from the cooktop cut-out to the side wall

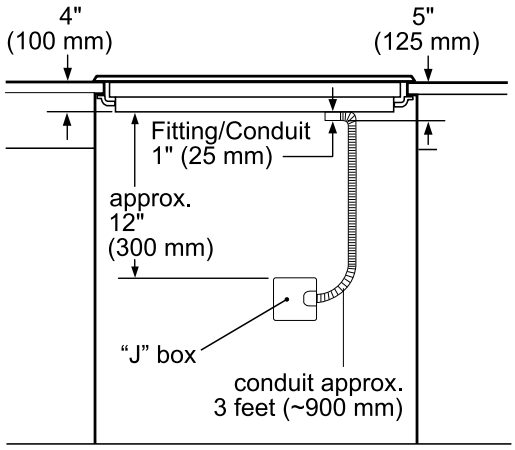

measurement in inches (mm)

CEM305TB
30-INCH ELECTRIC COOKTOP
MASTERPIECE® COLLECTION

INSTALLATION ABOVE A THERMADOR WALL OVEN

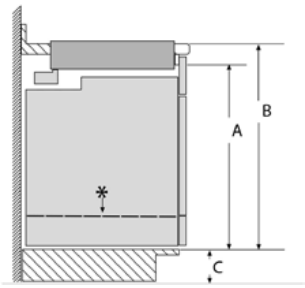

Product Type	A Inches (mm)	B min. Inches (mm)	C max. Inches (mm)
Conventional Oven	28 1/4 (718)	31 1/4 (794) min.	4 3/4 (121)
Steam Oven	25 1/16 (636)	28 1/16 (713)	7 15/16 (202)
Steam Oven with 4" Storage Drawer*	28 1/4 (718)	31 1/4 (794) min.	4 3/4 (121)
Microwave / Speed Oven	19 1/4 (488)	24 (609) min.	12" (306)
Microwave / Speed Oven with Warming drawer*	28 1/4 (718)	31 1/4 (794) min.	4 3/4 (121)

When installing an oven or oven with a drawer in combination with a cooktop, a minimum distance between the cabinet floor and countertop (B) is required. Reference the table for dimensions. Refer to the oven installation guide for all other measurements.

COUNTERTOP REQUIREMENTS

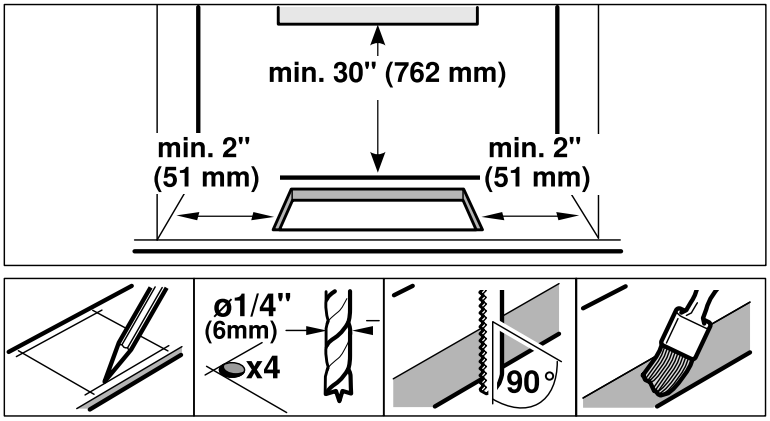

These warranties give you specific legal rights and you may have other rights that vary from state to state. Limited warranty from date of delivery. For complete warranty details, refer to your Use & Care manual, or ask your dealer.

Specifications are for planning purposes only. Refer to installation instructions and consult your countertop supplier prior to making counter opening. Consult with a heating and ventilation engineer for your specific ventilation requirements. For the most detailed information, refer to installation instructions accompanying product or write to Thermador indicating the model number. Specifications are correct at time of printing. Thermador reserves the right to change product specifications or design without notice. Some models are certified for use in Canada. Thermador is not responsible for products that are transported from the U.S. for use in Canada.

1 800 735 4328 | USA THERMADOR.COM | CANADA THERMADOR.CA | ©2024 BSH HOME APPLIANCES CORPORATION. ALL RIGHTS RESERVED.