Register your new Bosch now:
**www.bosch-home.com/welcome**

**Dishwasher** SMS24AI01A

BOSCH

**aus** Instruction manual

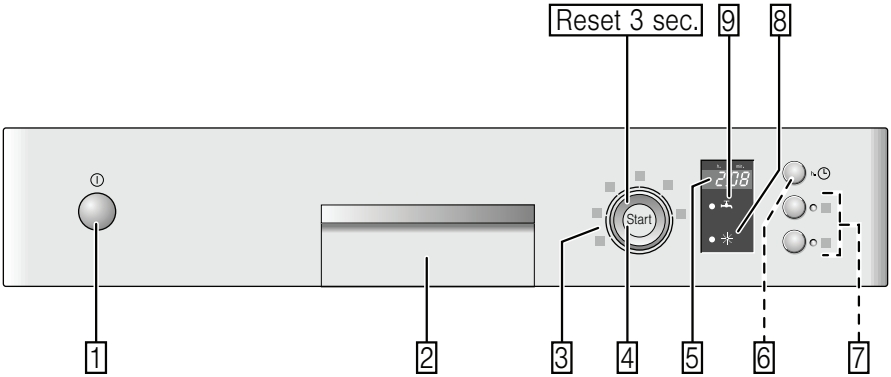
Reset 3 sec.
9
8
Start
1
2
3
4
5
6
7

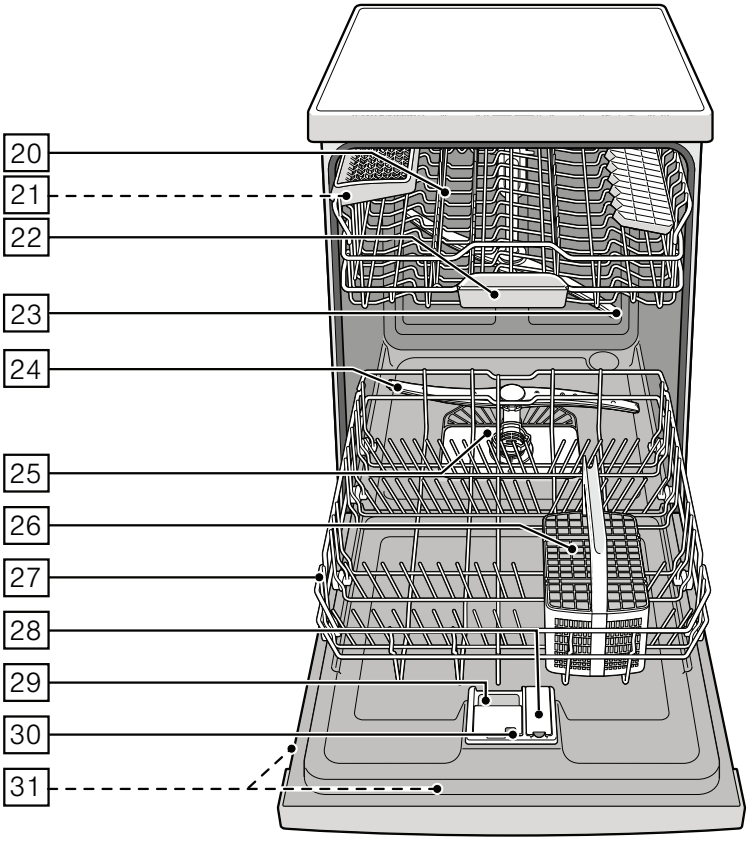
20
21
22
23
24
25
26
27
28
29
30
31

# Table of contents


**Intended use . . . . . 4**

**Safety instructions . . . . . 4**

Before you switch ON the appliance . . . . . 5
Delivery. . . . . 5
Installation. . . . . 5
In daily use . . . . . 6
Door lock . . . . . 7
Damage . . . . . 7
Disposal . . . . . 7

**Protection of the environment . . . . . 9**

Packaging. . . . . 9
Old appliances . . . . . 9

**Getting to know your appliance . . . . . 9**

Control panel . . . . . 9
Appliance interior . . . . . 9

**Rinse aid . . . . . 10**

Setting amount of rinse aid. . . . . 10
Switching off rinse aid refill indicator . . . . . 10

**Utensils . . . . . 11**

Not suitable . . . . . 11
Glass and utensil damage . . . . . 11
Loading the dishwasher . . . . . 11
Unloading the dishwasher . . . . . 11
Cups and glasses. . . . . 12
Pans . . . . . 12
Cutlery basket. . . . . 13
Etagere . . . . . 13
Folding spikes . . . . . 13
Small accessories holder . . . . . 13
Knife shelf. . . . . 14
Adjusting the height of the basket . . 14

**Detergent . . . . . 15**

Adding detergent . . . . . 15

**Overview of programmes . . . . 17**

Programme selection . . . . . 18
Information for test institutes. . . . . 18

**Additional options . . . . . 19**

Express Wash/ Speed Perfect (VarioSpeed) . . . . . 19
Half load . . . . . 19
Hygiene. . . . . 19
Intensive zone. . . . . 19
Extra drying. . . . . 19

**Operating the appliance . . . . . 20**

Aqua sensor . . . . . 20
Switching on the appliance. . . . . 20
Remaining running time display . . . . 20
Timer programming . . . . . 20
End of programme . . . . . 21
Switching off automatically after the end of the programme . . . . . 21
Switching off the appliance. . . . . 21
Interrupting the programme . . . . . 21
Terminating the programme . . . . . 22
Changing the programme. . . . . 22
Intensive drying. . . . . 22

**Cleaning and maintenance . . . 23**

Overall condition of the machine . . . 23
Rinse aid. . . . . 23
Filters . . . . . 24
Spray arms . . . . . 24

**Fault, what to do? . . . . . 25**

Waste water pump . . . . . 25
Fault table. . . . . 26

**Customer service . . . . . 33**

**Installation and connection . . 33**

Product package . . . . . 33
Safety instructions. . . . . 33
Delivery. . . . . 34
Technical specifications . . . . . 34
Installation. . . . . 34
Waste-water connection . . . . . 34
Drinking water connection . . . . . 35
Electrical connection. . . . . 35
Removing the appliance. . . . . 36
Transportation. . . . . 36
Protection against frost
(Emptying the appliance) . . . . . 36

## Intended use

- This appliance is intended for use in the home and domestic environments.
- Use the dishwasher only in the home and only for its designated purpose: for washing domestic dishes.
- This appliance is intended for use up to a maximum altitude of 4000 metres above sea level.

## Safety instructions

This appliance may be used by children over the age of 8 years old and by persons with reduced physical, sensory or mental capabilities or by persons with a lack of experience or knowledge if they are supervised or are instructed by a person responsible for their safety how to use the appliance safely and have understood the associated hazards.

Children must not play with, on, or around the appliance. Children must not clean the appliance or carry out general maintenance unless they are at least 8 years old and are being supervised.

Keep children below the age of 8 years old at a safe distance from the appliance and power cable.

## Before you switch ON the appliance

Please read the instructions for use and installation carefully. They contain important information on how to install, use and maintain the appliance.

Retain all documents for later use or for the subsequent owner.

You can download the instructions for use from our website free of charge. The relevant Internet address can be found overleaf on these instructions for use.

## Delivery

1. Check the packaging and dishwasher immediately for damage caused in transit. Do not switch on a damaged appliance, but contact your supplier.
2. Please dispose of the packaging material in an environmentally friendly manner.
3. Do not let children play with packaging and its parts. There is a risk of suffocation from collapsible boxes and film.

## Installation

- Following installation, ensure that the back of the dishwasher is not freely accessible (protection against contact due to hot surface).
- Install and connect the appliance according to the installation and assembly instructions.
- Prior to installation, disconnect the dishwasher from the power supply.
- Ensure that the protective conductor system of the domestic supply has been correctly installed.
- The electrical connection conditions must correspond with the specifications on the dishwasher rating plate [31].
- If the power cord of this appliance is damaged, it must be replaced with a particular power cord.

  To prevent injury, the power cord may be purchased from customer service only.
- If the dishwasher is installed in a high-sided unit, the unit must be secured properly.

- If the dishwasher is installed below or above other domestic appliances, follow the information for installation in combination with a dishwasher in the installation instructions for the particular appliances.
- Also follow the installation instructions for the dishwasher to ensure that all appliances are operated safely.
- If there is no information or if the installation instructions do not include the appropriate information, contact the manufacturer of these appliances to ensure that the dishwasher can be installed above or below these appliances.
- If you cannot obtain any information from the manufacturer, you must not install the dishwasher above or below these appliances.
- Install built-under or integratable appliances only under continuous worktops which have been screwed to adjacent cupboards to ensure stability.
- Do not install the appliance near heat sources (radiators, heat storage tanks, cookers or other appliances which generate heat) and do not install under a hob.
- Please note that the insulation material of the dishwasher power cord may melt next to heat sources (e.g. heating / hot water installations) or hot appliance parts. Make sure that the power cord of the dishwasher never comes into contact with heat sources or hot appliance parts.
- After installing the appliance, ensure that the plug is easily accessible.

  (See Electrical connection)
- Some models:

  The plastic housing on the water connection contains an electric valve, the connecting cables are in the supply hose. Do not cut through this hose, do not immerse the plastic housing in water.

## In daily use

Read and observe the safety information and instructions for use on the packaging for cleaning and rinsing agents.

## Childproof lock (door lock) *

The description of the childproof lock is at the back in the envelope.

* depending on model

## Damage

- The appliance may be repaired and opened up by a technician only. To do this, disconnect the appliance from the power supply. Pull out the mains plug or switch off the fuse. Turn off the tap.
- If the appliance is damaged, especially the fascia (cracks, holes, broken buttons), or the door function is impaired, stop operating the appliance. Pull out mains plug or switch off fuse. Turn off tap, call customer service.

## Disposal

1. Make redundant appliances unusable to prevent subsequent accidents.
2. Dispose of the appliance in a n environmentally friendly manner.

## ⚠ Warning
## Risk of injury!

- To prevent injuries, e.g. caused by stumbling, open the dishwasher only briefly in order to load and unload the dishwasher.
- Knives and other utensils with sharp points must be placed in the cutlery basket with the points downwards or horizontally on the knife shelf*.
- Do not lean or sit on the open door.
- In the case of free-standing appliances, ensure that the baskets are not overloaded.
- If the appliance is not in a cavity and a side panel is accessible, the door hinge area must be covered at the side for reasons of safety (risk of injury). The covers are available as optional accessories from customer service or specialist outlets.

* depending on model

### ⚠ Warning
**Risk of explosion!**

- Do not add any solvents to the washing chamber. Danger of explosion!
- If you use highly caustic alkaline or highly acidic cleaning agents, in particular commercial or industrial cleaning agents, do not put aluminium parts in the dishwasher. Danger of explosion!

### ⚠ Warning
**Risk of scalding!**

Open the door carefully when the programme is still running. There is a risk of hot water spraying out of the appliance.

### ⚠ Warning
**Risks to children!**

- If fitted, use the childproof lock. An exact description can be found in the back of the enve lope.
- Do not allow children to play with or operate the appliance.
- Keep children away from detergents and rinse aid. These may cause chemical burns in the mouth, throat and eyes or asphyxiation.
- Keep children away from open dishwasher. There may be small parts in the dishwasher which children could swallow and the water inside the dishwasher is not drinking water as it may contain detergent residue.
- Ensure that children do not place fingers in the tablet collecting tray [22]. Small fingers could become caught in the slots.
- When opening and closing the door on an eye-level appliance, ensure that children do not become jammed or crushed between the appliance door and the cupboard door below.
- Children could become locked in the appliance (danger of suffocation) or get into another dangerous situation.
  Redundant appliances: Pull out the mains plug, sever and dispose of the power cord. Destroy the door lock so that the door can no longer be closed.

# Protection of the environment

Both the packaging of new appliances and the old appliances themselves contain valuable raw materials and recyclable materials.

Please dispose of the individual parts separated according to type.

Please ask your dealer or inquire at your local authority about current means of disposal.

## Packaging

All plastic parts of the appliance are identified with internationally standardised abbreviations (e.g. >PS< polystyrene). Therefore, plastic waste can be sorted out when the appliance is being disposed of.

Please follow the safety instructions under “Delivery”.

## Old appliances

Please follow the safety instructions under “Disposal of your appliance”.

This appliance is labelled in accordance with European Directive 2012/19/EU concerning used electrical and electronic appliances (waste electrical and electronic equipment - WEEE). The guideline determines the framework for the return and recycling of used appliances as applicable throughout the EU

# Getting to know your appliance

Diagrams of the control panel and the interior of the appliance can be found in the envelope at the front.

Individual positions are referred to in the text.

## Control panel

1 ON/OFF switch
2 Door opener
3 Programme selector
4 START button
5 Digital display
6 Timer programming *
7 Additional options **
8 Rinse aid refill indicator
9 Display “Check water supply”
* depending on model

** Number depending on model

## Appliance interior

20 Top basket
21 Knife shelf *
22 Tablet collecting tray
23 Top spray arm
24 Bottom spray arm
25 Filters
26 Cutlery basket
27 Bottom basket
28 Dispenser for rinse aid
29 Detergent dispenser
30 Lock for detergent dispenser
31 Rating plate
* depending on model

# Rinse aid

As soon as the rinse-aid refill indicator 8 is lit on the fascia, there is still a rinse-aid reserve of 1-2 rinsing processes. Refill with rinse aid.

The rinse aid is required for stain-free utensils and clear glasses. Use only rinse aid for domestic dishwashers.

The function of rinse-aid is limited in combination products. You will generally obtain better results by using rinse-aid.

1. Open the dispenser 28 by pressing and lifting the plate on the cover.

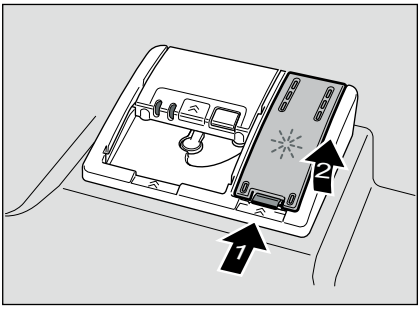


2. Carefully pour rinse aid up to the max. mark in the filler opening.

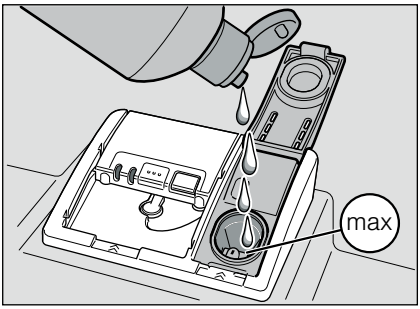


3. Close cover until it clicks shut.
4. To prevent excessive foam formation during the next rinse cycle, remove any rinse aid which has run over with a cloth.

## Setting amount of rinse aid

The amount of rinse aid can be set from r:00 to r:06. Please set rinse aid on r:05 to obtain very good drying results (r:05 is already set in factory).

Change this setting, only if streaks (select lower setting) or water stains (select higher setting) are left on the utensils.

1. Close the door.
2. Switch on ON/OFF switch 1.
3. Press and hold down the START button 4.
4. Rotate programme selector 3 until r:0... s indicated on the digital display 5.
5. Release button.
   The factory set value r:05 is lit on the digital display 5.

**To change the setting:**

1. Rotate programme selector 3 until the required value is indicated on the digital display 5.
2. Press START button 4.
   The set value is saved.

## Switching off rinse aid refill indicator

If the rinse-aid refill indicator 8 is impaired (e.g. when using combined detergents containing rinse aid component), it can be switched off.

- Proceed as described under “Setting amount of rinse aid” and set the value to r:00.

The rinse aid refill indicator 8 is now switched off.

# Utensils

## Not suitable

- Cutlery and utensils made of wood.
- Delicate decorative glasses, craft and antique utensils. These decors are not dishwasher-proof.
- Plastic parts not resistant to heat.
- Copper and tin utensils.
- Utensils which are soiled with ash, wax, lubricating grease or ink.
- Aluminium parts in conjunction with highly caustic alkaline or highly acidic cleaning agents, in particular commercial or industrial cleaning agents.

Aluminium and silver parts have a tendency to discolour and fade during the wash cycle. Even some types of glass (e.g. crystal glass objects) may turn cloudy after many wash cycles.

## Glass and utensil damage

**Causes:**

- Glass type and glass production process.
- Chemical composition of the detergent.
- Water temperature of the wash programme.

**Recommendation:**

- Use only glasses and porcelain which the manufacturer designates as dishwasher-proof.
- Use a detergent which protects utensils.
- Take glass and cutlery out of the dishwasher as soon as possible after the programme ends.

## Loading the dishwasher

Using the dishwasher normally allows you to save energy and water compared to washing-up by hand.

1. Remove large food remnants. Prerinsing under running water is not necessary - nor is this a good idea in terms of saving energy.
2. Arrange tableware so that
   - it is secure and cannot tip over.
   - all tableware with the openings face down.
   - parts with curves or recesses are at an angle, so allowing water to drain off.
   - rotation of the two spray arms 23 and 24 is not obstructed.

To save energy and water, load the dishwasher to its specified capacity.

Very small items of tableware should not be washed in the machine as they may easily fall out of the baskets.

## Unloading the dishwasher

To prevent water from dripping off the upper basket onto the utensils in the lower basket, it is recommended to empty the appliance from the bottom up.

Hot utensils are sensitive to shock! Therefore, when the programme ends, leave the utensils to cool down in the dishwasher until they can be handled.

**Note**

When the programme ends, water droplets can still be seen inside the appliance. This does not affect the drying of the utensils.

## Cups and glasses

Top basket [20]

**Note**

Utensils must not be placed above the tablet collecting tray [22]. These may block the lid of the detergent dispenser and prevent it from opening fully.

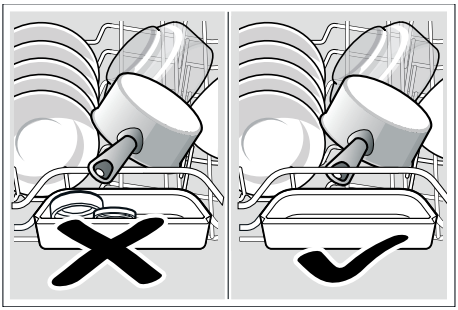

## Pans

Bottom basket [27]

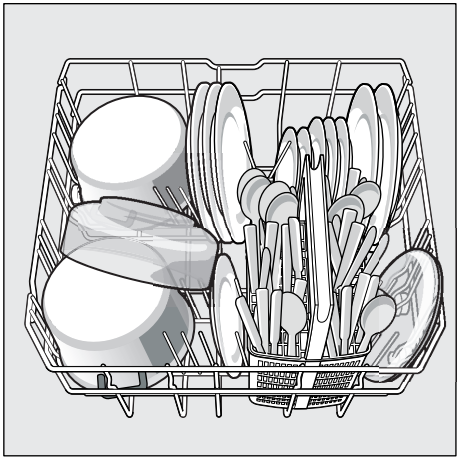

**Tip**

Heavily soiled utensils (pans) should be placed in the bottom basket. The more powerful spray jet provides a better dishwashing result.

**Tip**

Other examples, such as the best way of loading your dishwasher, can be found on our homepage as a free download. The corresponding Internet address can be found on the back page of these instructions for use.

## Cutlery basket

You should always place cutlery unsorted with the points downwards.

To prevent injuries, place long, pointed implements and knives on the knife shelf.

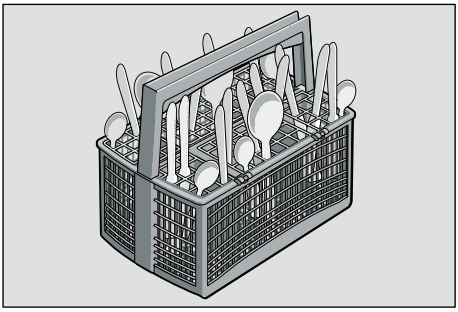

## Etagere *

The etagere and the space underneath can be used for small cups and glasses or for larger items of cutlery, such as wooden spoons or serving cutlery. The etagere can be folded up if not required.

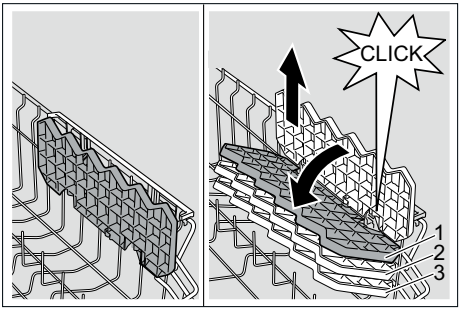


* Depending on the model, a 3-fold height adjustment is possible. To do this, first place the etagere vertically and pull up, then place at a slight angle, push down to the required height (1, 2, or 3) and snap into place.

## Folding spikes *

* depending on model

The spikes can be folded down to improve arrangement of pans, bowls and glasses.

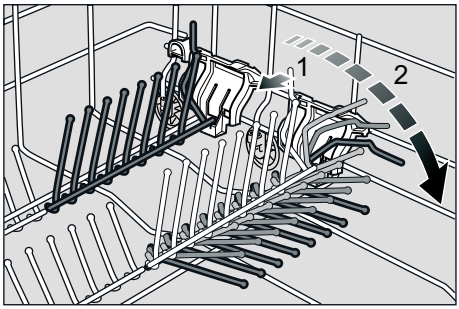


## Small accessories holder *

* depending on model

Light-weight plastic accessories, e.g. cups, lids, etc. can be held securely in the small accessories holder.

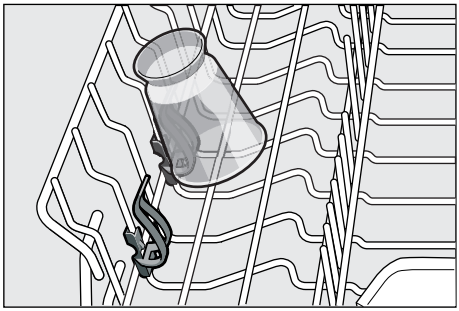

## Knife shelf *

* depending on model

Long knives and other utensils can be arranged horizontally.

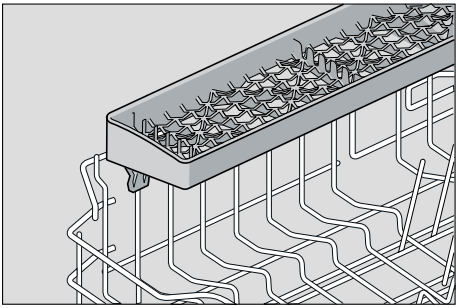

## Adjusting the height of the basket *

* depending on model

If required, the height of the upper utensils basket 20 can be adjusted to provide more space for tall utensils either in the upper or lower basket.

**Appliance height 81.5 cm**

| | Top basket | Bottom basket |
|---|---|---|
| Setting 1 max. ø | 22 cm | 30 cm |
| Setting 2 max. ø | 24.5 cm | 27.5 cm |
| Setting 3 max. ø | 27 cm | 25 cm |

**Appliance height 86.5 cm**

| | Top basket | Bottom basket |
|---|---|---|
| Setting 1 max. ø | 24 cm | 33 cm |
| Setting 2 max. ø | 26.5 cm | 30.5 cm |
| Setting 3 max. ø | 29 cm | 28 cm |

Select one of the two following procedures according to the design of the top basket for your appliance model:

## Top basket with side levers

1. Pull out the top basket 20 out.
2. To **lower** the basket, press in the left and then the right lever on the outside of the basket. In doing so, hold the sides of the basket along the upper edge to prevent it from suddenly dropping.

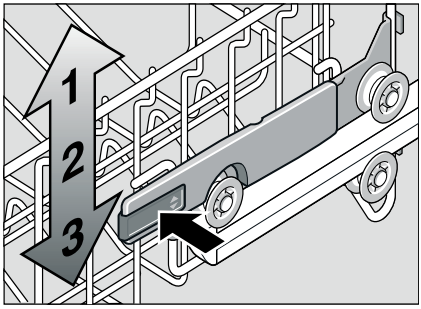


3. To **raise** the basket, hold the basket on the sides of the upper edge and lift it up.
4. Before re-inserting the basket again, ensure that it is at the **same height** on both sides. Otherwise, the appliance door cannot be closed and the upper spray arm will not be connected to the water circuit.

## Top basket with upper and lower roller pairs

1. Pull out the top basket 20 out.
2. Remove the upper basket and re-attach it to the upper (stage 3) or lower (stage 1) rollers.

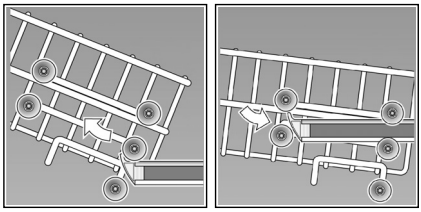

# Detergent

You can use tablets as well as powder or liquid detergents for dishwashers, but never use washing-up liquid. The dosage can be individually adjusted with powder or a liquid detergent according to the degree of soiling. Tablets contain an adequately large amount of active ingredients for all cleaning tasks. Modern, powerful detergents predominantly use a low-alkaline formulation with enzymes. Enzymes break down starch and remove protein. To remove coloured stains (e.g. tea, ketchup), oxygen-based bleaching agents are generally used.

**Note**

To ensure a good washing result, always follow the instructions on the detergent packaging!
If you have further questions, we recommend that you contact the detergent manufacturers' helpline.

⚠ **Warning –** Read and observe the safety information and instructions for use on the packaging for cleaning and rinsing agents.

## Adding detergent

1. If the detergent dispenser [29] is still closed, press the lock [30] to open the detergent dispenser.

   Pour detergent into the dry detergent dispenser [29] only (insert tablet flat, not on its edge).
   Dosage: see manufacturer's instructions on the packaging.
   The graduated detergent dispenser [29] helps you add the correct amount of powder or liquid detergent.
   Usually 20 ml–25 ml are adequate for normal soiling. If using tablets, one tablet is adequate.

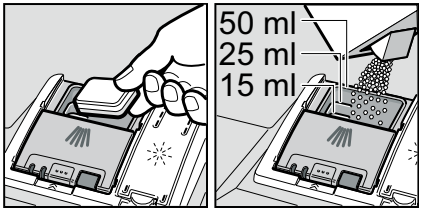


2. Close the cover on the detergent dispenser by sliding it up until the lock engages without difficulty.

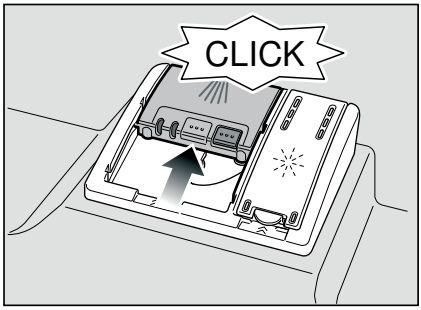


   The detergent dispenser opens automatically at the optimum time depending on the programme.
   The powder or liquid detergent is distributed in the appliance and is dissolved, the tablet falls into the tablet collecting tray where it dissolves in doses.

**Tip**

If the utensils are only lightly soiled, slightly less than the indicated amount of detergent is usually adequate.

Suitable detergents and care products can be purchased online via our website or via customer service (see back page).

⚠ **Warning –** Do **not** place small parts for washing in the tablet collecting tray [22]; this prevents the tablet from dissolving evenly.

⚠ **Warning –** If you want to add more utensils after the programme has started, do **not** use the tablet collecting tray [22] as a handle for the upper basket. The tablet could already be there and you will touch the partially dissolved tablet.

**Notes**

- If programmes are short, tablets may not have full cleaning effect due to different dissolving properties and there may even be undissolved detergent residue. It is recommended to use washing powder for these programmes.
- The Intensive programme (on some models) requires one tab only. When using washing powder, you can apply some of this cleaning agent to the inside of the appliance's door.
- If using detergents in a water-soluble protective cover: Take hold of the cover with dry hands only and put the detergent into an absolutely dry detergent dispenser only, otherwise the detergent may stick.
- If you switch from combined detergents to solo detergents, ensure that the water softening system and amount of rinse aid have been set to the correct value.

# Overview of programmes

**The max. possible number of programmes is illustrated in this overview. The corresponding programmes for your appliance can be found on the fascia. The programme data has been measured in the laboratory according to AS/NSZ 2007.**

| Type of utensils and soiling | Programm | Programme data<br>1.) Duration: hs/mins<br>2.) Energy consumption in kWh<br>3.) Water consumption in litres<br>4.) With Aquasensor | Possible additional options | Programme sequence |
|---|---|---|---|---|
| Pots, utensils and cutlery<br>Highly soiled | Pots/Pans | 1.) **2:15**<br>2.) **1,50**<br>3.) **15**<br>4.) **12** | all | Prerinse<br>Clean 70°<br>Intermediate rinse<br>Final rinse 70°<br>Dry |
| | / intensive | 1.) **2:10**<br>2.) **1,40**<br>3.) **14**<br>4.) **-** | all | Prerinse<br>Clean 65°<br>Intermediate rinse<br>Final rinse 70°<br>Dry |
| Utensils and cutlery<br>Normally soiled | auto<br>Auto Wash | 1.) **1:35-2:40**<br>2.) **1,00-1,60**<br>3.) **-**<br>4.) **9-19** | all | **Sensor-controlled:**<br>Is optimised according to the soiling with the aid of sensors. |
| | / **eco**<br>Eco Wash | 1.) **2:20**<br>2.) **0,73**<br>3.) **13,5**<br>4.) **-** | all | **Most economical programme:**<br>Prerinse<br>Clean 45°<br>Intermediate rinse<br>Final rinse 45°<br>Dry |

| | | | | |
|---|---|---|---|---|
| Utensils and cutlery<br>Lightly soiled | / <br>Express Wash | 1.) **0:29**<br>2.) **0,80**<br>3.) **10**<br>4.) **-** | Extra drying | Clean 45°<br>Intermediate rinse<br>Final rinse 55° |
| all types of utensils<br>Lightly soiled | / <br>Prerinse | 1.) **0:15**<br>2.) **0,05**<br>3.) **4**<br>4.) **-** | none | **Cold rinse**:<br>Prerinse |

**Note**

The consumption figures depend on the selected programme and additional functions. The programme duration will be different if the machine is short of rinse additive or the function is turned off.

## Programme selection

You can select a suitable programme according to the type of utensils and degree of soiling.

## Information for test institutes

Test institutes can request the conditions for running comparison tests by sending an e-mail to

dishwasher@test-appliances.com.

Quote the appliance number (E-Nr.) and the production date (FD) which you can find on the rating plate 31 on the appliance door.

Open ajar using a block of approximately 50 mm upon completion of dry test.

# P+ Additional options

* depending on model

Additional options can be set with the buttons 7.

## Express Wash/ SpeedPerfect/ (VarioSpeed) *

This function can reduce the running time by approx. 20% to 50% depending on the selected rinse programme. The change in the running time is indicated on the digital display 5. To obtain optimum cleaning results at a reduced running time, water and energy consumption are increased.

## Half load *

If you have only a few items to wash (e.g. glasses, cups, plates), you can switch to “half load”. This will save water, energy and time. It is recommended to put a little less detergent in the detergent dispenser than for a full load.

## Hygiene *

The temperature is increased during the cleaning process. This improves the hygiene status. This additional option is ideal for cleaning e.g. chopping boards and baby bottles. In return this slightly increases energy consumption and the run time.

## Intensive zone *

Perfect for mixed loads. You can wash very soiled pots and pans in the lower basket together with normally soiled tableware in the upper basket. The spray pressure in the lower basket is intensified. This will increase the run time and the energy consumption then rises.

## Extra drying *

A higher temperature during the final rinse and an extended drying phase ensure that plastic parts will also dry better. This slightly increases energy consumption. The run time will be extended.

# Operating the appliance

## Aqua sensor *

* depending on model

The Aqua sensor is an optical measuring device (light barrier) which measures the turbidity of the rinsing water.

The Aqua sensor is used according to the programme. If the Aqua sensor is active, “clean” rinsing water can be transferred to the next rinse bath and water consumption can be reduced by 3–6 litres. If the turbidity is greater, the water is drained and is replaced with fresh water. In the automatic programmes the temperature and running time can also be adjusted to the degree of soiling.

## Switching on the appliance

1. Turn on the tap fully.
2. Switch on ON/OFF switch [1].
3. Rotate programme selector [3] to the required programme.
   The expected programme duration flashes on the digital display [5].
4. Press START button [4].
   The programme starts running.

**Tip**

To remove any marks from water or other residues, we recommend you operate the appliance without tableware before using it for the first time.

To assist the drying, we recommend that the door will be partially opened after the cycle.

## Remaining running time display

When the programme is selected, the remaining running time of the programme is indicated on the digital display [5].

The running time is determined during the programme by the water temperature, the number of utensils as well as the degree of soiling and may vary (depending on the selected programme).

## Timer programming *

* depending on model

You can delay the start of the programme in 1-hour steps up to 24 hours.

1. Close the door.
2. Switch on ON/OFF switch [1].
3. Press button [6] until the digital display [5] jumps to h:01.
4. Press button [6] until the displayed time corresponds with your requirements.
5. Press START button [4], timer programming is activated.
6. To delete the preselected starting time, press the button [6] until h is indicated on the digital display.
   You can change your programme selection at any time until the programme starts.

## End of programme

The programme has ended when the value 0:00 is indicated on the numerical display [5].

## Switching off automatically after the end of the programme *

* depending on model

To save energy, the dishwasher is switched off 1 minute after the programme ends (factory setting).

Automatic disconnection can be adjusted from P:00 to P:02.

P:00 Appliance does not switch off automatically

P:01 Off after 1 min

P:02 Off after 120 min

1. Close the door.
2. Switch on ON/OFF switch [1].
3. Press and hold down the START button [4].
4. Rotate programme selector [3] until P:0... s indicated on the digital display [5].
5. Release button.
   The factory set value P:01 is lit on the digital display [5].

**To change the setting:**

1. Rotate programme selector [3] until the required value is indicated on the digital display [5].
2. Press START button [4].
   The set value is saved.

## Switching off the appliance

Short time after the end of the programme:

1. Switch off ON/OFF switch [1].
2. Turn off the tap (not applicable if Aqua-Stop fitted).
3. Open the door.
4. Remove the utensils when they have cooled down.

**Note**

When the programme ends, leave the appliance to cool down a while before opening it. This will prevent steam from escaping and causing long-term damage to your built-in furniture.

## Interrupting the programme

1. Switch off ON/OFF switch [1].
   The LEDs go out. The programme is saved.
   If the door was opened on an appliance which has a warm water connection or is heated, first leave the door ajar for several minutes and then close. Otherwise, expansion (pressure) may cause the appliance door to spring open or water to run out of the appliance.
2. To continue the programme, switch on the ON/OFF switch [1] again.

## Terminating the programme (Reset)

1. Press START button [4] for approx. 3 sec.
   The numerical display [5] indicates 0:01.
2. The programme sequence lasts approx. 1 min. On the digital display [5] is indicated 0:00.
3. Switch off ON/OFF switch [1].

## Changing the programme

When the START button [4] has been pressed, the programme cannot be changed.

The only way a programme can be changed is by Cancel programme (Reset).

## Intensive drying

The final rinse uses a higher temperature which improves the drying result. The running time may increase slightly. (Caution if utensils are delicate!)

1. Close the door.
2. Switch on ON/OFF switch [1].
3. Press and hold down the START button [4].
4. Rotate programme selector [3] until d:00 is indicated on the digital display [5].
5. Release button.
   The factory-set value d:00 is lit on the digital display [5] (intensive drying off).

Change the setting as follows:

1. By rotating the programme selector [3], you can switch intensive drying on d:01 or off d:00.
2. Press START button [4].
   The set value is saved.

# Cleaning and maintenance

A regular inspection and maintenance of your machine will help to prevent faults. This saves time and prevents problems.

## Overall condition of the machine

- Check spray arm for grease and limescale deposits.

If you find such deposits:

- Fill detergent dispenser with detergent. Start the appliance without utensils in the programme with the highest rinsing temperature.

Clean the appliance with detergents/ appliance cleaners which are particularly suitable for use with dishwashers.

- To extend the life of your appliance, clean the appliance regularly with a special dishwasher detergent.
- To ensure that the door seal always remains clean and hygienic, regularly clean it with a damp cloth and a little washing-up liquid.
- If the appliance is switched off for a prolonged period, leave the door ajar to prevent the formation of an unpleasant odour.

Never use a steam cleaner to clean your dishwasher. The manufacturer is not liable for any consequential damage.

Regularly wipe the front of the appliance and fascia with a damp cloth; water and a little washing up liquid are adequate. Do not use sponges with a rough surface or abrasive detergents, as these could scratch the surfaces.

Stainless steel appliances: To prevent corrosion, avoid using sponge cloths or wash them out thoroughly several times before using for the first time.

**⚠ Warning – Health hazard**

Never use other domestic detergents, e.g. containing chlorine!

## Rinse aid

- Check the refill indicator [8]. If required, refill rinse aid.

## Filters

The filters [25] keep large foreign objects in the rinsing water away from the pump. These foreign objects may occasionally block the filters.

The filter system consists of a coarse filter, a flat fine filter and a microfilter.

1. After each washing cycle check the filters for residue.
2. Unscrew filter cylinder as illustrated and take out filter system.

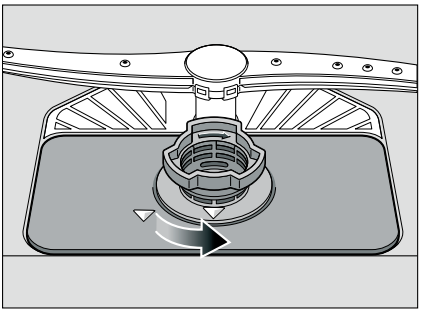

3. Remove the micro filter (1).
   Press together the locking catches (2) and remove the coarse filter (3).

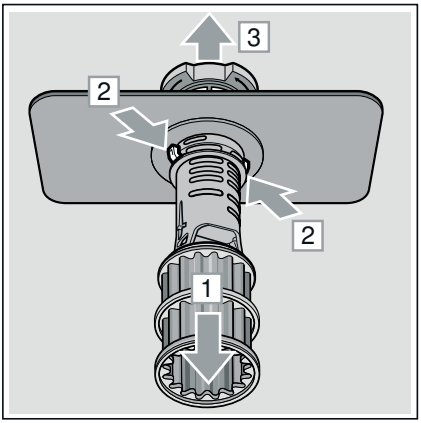


4. Remove any residue and clean filters under running water.
5. Re-install filter system in reverse sequence and ensure that the arrow marks are opposite each other after closing the filter system.

## Spray arms

Limescale and contaminants in the rinsing water may block nozzles and bearings on the spray arms [23] and [24].

1. Check outlet nozzles on the spray arms for blockages.
2. Unscrew the upper spray arm [23].
3. Remove the lower spray arm [24] upwards.

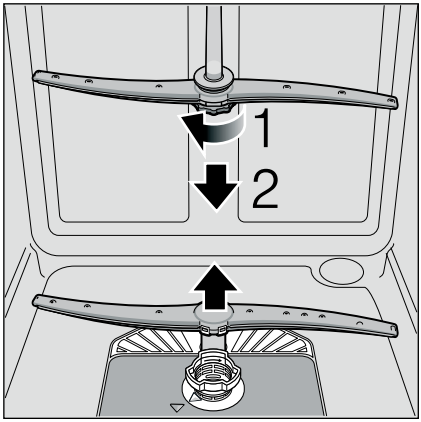


4. Clean spray arms under running water.
5. Re-engage or screw on spray arms.

# Fault, what to do?

Experience has shown that you can rectify most faults which occur in daily operation yourself. This ensures that the machine is quickly available to you again. In the following overview you can find possible causes of malfunctions and helpful information for rectifying them.

**Note**

If the appliance stops during dishwashing or does not start for no obvious reason, first run the Abort programme function (Reset).
(See chapter entitled “Operating the appliance”)

⚠ **Warning –** Don’t forget: Repairs may be carried out by technicians only. If a component has to be replaced, ensure that only original spare parts are used. Improper repairs or use of non-original spare parts may cause considerable damage and put the user at considerable risk.

## Waste water pump

Large food remnants or foreign objects which were not captured by the filters may block the waste water pump. The rinsing water will then be above the filter.

⚠ **Warning – Risk of cuts!**

When cleaning the waste water pump, ensure that you do not injure yourself on pieces of broken glass or pointed implements.

In this case:

1. First always disconnect the appliance from the power supply.
2. Take out top basket [20] and bottom basket [27].
3. Remove the filters [25].
4. Scoop out water, use a sponge if required.
5. Prise out the white pump cover (as illustrated) using a spoon. Grip the cover on the crosspiece and lift diagonally inwards. Remove cover completely.

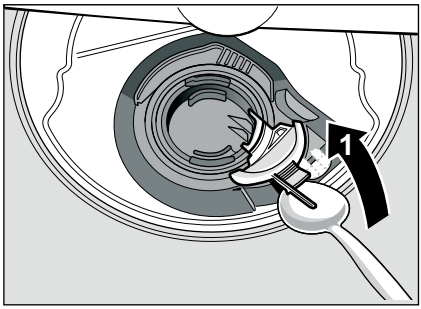


6. Check impeller wheel and remove any foreign objects.
7. Place cover in the original position and press down until it engages (click).

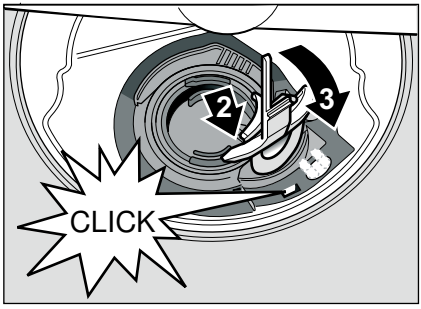


8. Install filters.
9. Re-insert baskets.

## Fault table

| Fault | Cause | Remedial action |
|---|---|---|
| "Check water supply" display 9 lights up. | Supply hose kinked. | Install supply hose without kinks. |
| | Tap turned off. | Turn on the tap. |
| | Tap jammed or calcified. | Turn on the tap.<br>Flow rate must be min. 10 l/min. when water supply is open. |
| | Filter in the water supply blocked. | Switch off the appliance and pull out the mains plug. Turn off the tap. Unscrew water connection.<br> 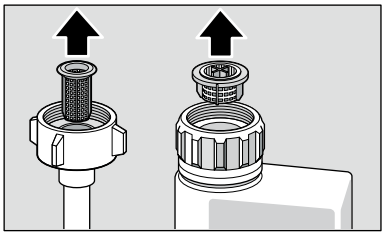 <br>Clean filter in the supply hose. Screw water connection on again. Check for leaks. Reconnect power supply. Switch on the appliance. |
| Error code E:07 is lit. | Intake opening (on right inside of appliance) covered by utensils. | Arrange utensils so that the intake opening is not obstructed. |
| Error code E: 12 is lit. | Heating element soiled. | Clean appliance with dishwasher cleaning agent (see Cleaning and maintenance). |
| Fault code E: 14 is lit. | Water protection system activated. | Turn off tap.<br>Call customer service and mention the fault code. |
| Fault code E: 15 is lit. | | |
| Fault code E: 16 is lit. | Constant water inflow. | |
| Error code E:22 is lit *. | Filters 25 are soiled or blocked. | Clean filters.<br>(See Cleaning and maintenance) |
| Error code E:24 is lit. | Waste water hose is blocked or kinked. | Install hose without kinks, remove any residue. |
| | Siphon connection still sealed. | Check connection to siphon and open if required. |
| | Cover on the waste water pump loose. | Lock cover correctly.<br>(See Waste water pump) |
| Error code E:25 is lit. | Waste water pump blocked or cover on the waste water pump is not locked in position. | Clean pump and lock cover correctly. (See Waste water pump) |

| Fault | Cause | Remedial action |
|---|---|---|
| Error code E:27 is lit. | Mains voltage too low. | Not an appliance fault, have the mains voltage and electrical installation checked. |
| A different error code is indicated on the digital display. (E:01 to E:30) | A technical fault has probably occurred. | Switch off appliances with the ON/OFF switch 1. After a short time restart the appliance.<br>If the problem recurs, turn off the tap and pull out the mains plug.<br>Call customer service and mention the error code. |
| Display flashes | Door not closed properly. | Close the door. Ensure that no objects (utensil, fragrance dispenser) are protruding over the basket and preventing the door from closing. |
| Refill indicator for rinse-aid 8 is lit. | No rinse aid. | Refill rinse aid. |
| Refill indicator for rinse-aid 8 is not lit. | Refill indicator switched off. | Activation/deactivation (see chapter Rinse aid). |
| | There is still enough rinse aid available. | Check refill indicator, level. |
| Water is left in the appliance at the end of the programme. | Filter system or area under the filters 25 is blocked. | Clean filters and area underneath (see Waste water pump). |
| | The programme has not yet ended. | Wait until programme ends or reset (see Terminating the programme). |

| Fault | Cause | Remedial action |
|---|---|---|
| Utensils not dry. | No or too little rinse aid in the dispenser. | Refill rinse aid. |
| | Programme selected without drying. | Select programme with drying (see Overview of programmes, Programme sequence). |
| | Water collecting in depressions on the utensils and cutlery. | Arrange utensils in a sloping position, arrange affected utensils as sloping as possible. 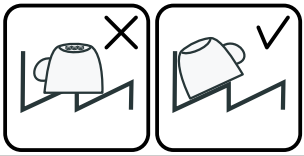 |
| | The combined detergent used has a poor drying performance. | Use different combination detergent with better drying performance. Use of rinse aid also increases the drying performance. |
| | Intensive drying to increase drying not activated. | Activate intensive drying (see Operating the appliance) |
| | Utensils were removed too early or drying process had not ended yet. | Wait until program ends or wait until 30 min after program ends before removing utensils. |
| | The eco rinse aid used has a poor drying performance. | Use a proprietary rinse aid. Eco products are much less effective. |
| Plastic utensils not dry. | Special properties of plastic. | Plastic has a lower heat storage capacity and therefore dries less well. |
| Cutlery not dry. | Cutlery not arranged properly in the cutlery basket. | Separate cutlery if possible, prevent contact points. |
| | Cutlery not arranged properly in the cutlery drawer. | Arrange cutlery properly and separate if possible. |
| Appliance interior wet after rinse cycle. | No appliance fault. | On account of the “Condensation drying” principle, water droplets are physically induced and required in the container. The humidity in the air condenses on the inner walls of the dishwasher, drains and is pumped out. |

| Fault | Cause | Remedial action |
|---|---|---|
| Food remnants on the utensils. | Utensils placed too closely together, utensils basket overfilled. | Arrange utensils with adequate clearance between them ensuring that the spray jets can reach the surface of the utensils. Prevent contact points. |
| | Spray arm rotation obstructed. | Arrange utensils so that the spray arm can rotate without obstruction. |
| | Spray arm nozzles blocked. | Clean the spray arm nozzles,<br>(See Cleaning and maintenance). |
| | Filters 25 dirty. | Clean filters, (see Cleaning and maintenance). |
| | Filters 25 inserted incorrectly and/or not engaged. | Insert and engage filters correctly. |
| | Rinse programme too weak. | Select a more intensive rinse programme. |
| | Utensils precleaned too intensely; sensors therefore decide on weak programme sequence. Stubborn soiling cannot be completely removed. | Do not prerinse utensils. Remove only large food remnants. |
| | Tall narrow receptacles in corner areas are not rinsed adequately. | Do not place hollow receptacles too obliquely and do not place in the corner area. |
| | Top basket 20 on right and left not set to same height. | Set top basket to same height using side levers. |
| Detergent residue | Detergent dispenser cover blocked by utensils and therefore does not open fully. | Detergent dispenser cover must not be obstructed by utensils.<br>Do not place utensils or fragrance dispenser in the tablet collecting tray. |
| | Detergent dispenser cover blocked by the tablet. | Tablet must be inserted flat and not upright. |
| | Tablets used in the quick or short programme.<br>Dissolving time of the detergent is not reached in the selected short programme. | Dissolving time of tablets too long for a quick or short programme.<br>Use a detergent powder or select a more intensive programme. |
| | Washing effect and dissolving performance are reduced after a prolonged storage time or detergent is very lumpy. | Change detergent. |
| Water stains on plastic parts | Droplet formation on plastic surface is physically unavoidable. After drying, water stains are visible. | Use a more intensive programme (more water changes).<br>Arrange utensils in a sloping position.<br>Use rinse aid. |

| Fault | Cause | Remedial action |
|---|---|---|
| Washable or water-soluble coatings in the container or on the door. | Detergent substances are deposited. These coatings cannot usually be removed with chemicals (appliance cleaner, ...). | Change detergent brand.<br>Clean appliance mechanically. |
| | Only for glasses: Initial glass corrosion – can only apparently be wiped off. | See Glass and utensil damage. |
| White, stubborn coatings; limescale on the utensils, container or door. | Detergent substances are deposited. These coatings cannot usually be removed with chemicals (appliance cleaner, ...). | Change detergent brand.<br>Clean appliance mechanically. |
| | Underdosing of detergent. | Increase detergent dosage or change detergent. |
| | Too weak rinse programme selected. | Select a more intensive rinse programme. |
| Tea or lipstick residue on the utensils. | Too low rinsing temperature. | Select programme with higher washing temperature. |
| | Too little or unsuitable detergent. | Use suitable detergent at correct dosage. |
| | Utensils precleaned too intensely; sensors therefore decide on weak programme sequence. Stubborn soiling cannot be completely removed. | Do not prerinse utensils. Remove only large food remnants. |
| Coloured (blue, yellow, brown), difficult to remove to non-removable coatings in the appliance or on stainless steel utensils. | Film formation consisting of ingredients from vegetables (e.g. cabbage, celery, potatoes, noodles, ...) or the tap water (e.g. manganese). | Can be partly removed with machine cleaner or by mechanical cleaning. Coatings are harmless. |
| | Film formation caused by metallic components on silver or aluminium utensils. | Can be partly removed with machine cleaner or by mechanical cleaning. |
| Discolouration of the plastic parts inside the appliance. | Plastic parts inside the appliance may become discoloured during the service life of the dishwasher. | Discolouration is normal and will not impair the function of the dishwasher. |
| Plastic parts discoloured. | Too low rinsing temperature. | Select programme with higher washing temperature. |
| | Utensils precleaned too intensely; sensors therefore decide on weak programme sequence. Stubborn soiling cannot be completely removed. | Do not prerinse utensils. Remove only large food remnants. |

| Fault | Cause | Remedial action |
|---|---|---|
| Removable streaks on glasses, glasses with metallic appearance and cutlery. | Too much rinse aid. | Set rinse aid amount to lower setting. |
| | No rinse aid added or setting too low. | Add rinse aid and check dosage (recommended setting 4-5). |
| | Detergent residue in the final rinse programme section. Detergent dispenser cover blocked by utensils (cover does not open fully). | Detergent dispenser cover must not be obstructed by utensils.<br>Do not place utensils or fragrance dispenser in the tablet collecting tray. |
| | Utensils precleaned too intensely; sensors therefore decide on weak programme sequence. Stubborn soiling cannot be completely removed. | Do not prerinse utensils. Remove only large food remnants. |
| Initial or existing, irreversible clouding of glass. | Glasses not dishwasher-proof, only suitable for dishwasher. | Use dishwasher-proof glasses.<br>Avoid long steam phase (standing time after wash cycle ends).<br>Use wash cycle at lower temperature.<br>Use detergent with glass protection component. |
| Rust spots on the cutlery. | Cutlery not adequately rust-resistant. Knife blades are frequently more severely affected. | Use corrosion-resistant cutlery. |
| | Cutlery will also rust if rusting parts are rinsed at the same time (pan handles, damaged utensil baskets, etc.). | Do not wash rusting parts. |
| The appliance does not start. | The mains fuse has tripped. | Check mains fuse. |
| | Power cord not inserted. | Ensure that the power cord is plugged all the way into the back of the appliance and into the socket. Check that the socket functions. |
| | The appliance door has not been shut properly. | Close the door. |
| Programme starts automatically. | You did not wait until programme ended. | Perform reset.<br>(See Terminating the programme). |
| The door is difficult to open. | Child-proof lock is activated. | Deactivate childproof lock. (See instructions for use at the back) |
| Door cannot be closed. | Door lock has been activated. | Close door with increased force. |
| | Door cannot be closed due to installation. | Check appliance installation: Door or attached parts must close without obstruction. |

| Fault | Cause | Remedial action |
|---|---|---|
| Cover on the detergent dispenser cannot be closed. | Detergent dispenser or cover guide blocked by sticky detergent residue. | Remove detergent residue. |
| Detergent residue in the detergent dispenser or in the tablet collecting tray. | Spray arms blocked by utensils, therefore detergent is not rinsed out. | Ensure that the spray arms can rotate freely. |
| | The detergent dispenser was damp when filled. | Pour detergent into the dry detergent dispenser only. |
| Appliance stops in the programme or programme is interrupted. | Door not closed properly. | Close the door. |
| | Do not place utensils or fragrance dispenser in the tablet collecting tray. | Check whether rear panel is being pressed in, e.g. by socket or by hose holder which has not been removed. |
| | Top basket presses against inner door and prevents door from being closed securely. | |
| | Power and/or water supply interrupted. | Restore power and/or water supply. |
| Filling valves making striking noises. | Depends on domestic installation, as appliance is not defective. No effect on appliance function. | No remedial action possible. |
| Knocking or rattling noise. | Spray arm strikes the utensils, utensils not positioned correctly. | Position utensils so that the spray arms do not strike the utensils. |
| | If there is a low load, the water jets strike the washing tank directly. | Load the appliance with more utensils or distribute the utensils more evenly in the dishwasher. |
| | Light utensils move during the wash cycle. | Arrange light utensils securely. |
| Unusual foam formation. | Handwash liquid in the rinse aid dispenser. | Immediately refill rinse aid dispenser with rinse aid. |
| | Rinse aid spilled. | Remove rinse aid with a cloth. |

* depending on model

# Customer service

If you are unable to rectify the fault, please contact your customer service. We always find a suitable solution, even to avoid unnecessary visits by technicians. Contact information for your nearest customer service can be found on the back of these instructions for use or on the enclosed customer service list. When calling, please state the appliance number (E-Nr. = 1) and the production number (FD = 2) which can be found on the rating plate 31 on the appliance door.

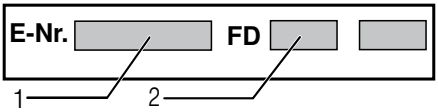


**Rely on the competence of the manufa cturer.** Contact us. You can therefore be sure that the repair is carried out by trained service technicians who carry original spare parts for your domestic appliances.

# Installation and connection

The dishwasher must be connected correctly, otherwise it will not function properly. The specifications for the inlet and outlet as well as the electrical connected loads must correspond with the required criteria as specified in the following paragraphs or in the installation instructions.

Install the appliance in the correct sequence:

1. Checking appliance on delivery
2. Installing the appliance
3. Waste water connection
4. Drinking water connection
5. Electrical connection

## Product package

If you have any complaints, contact the dealer where you purchased the appliance or our customer service.

- Dishwasher
- Instructions for use
- Installation instructions
- Warranty*
- Installation materials
- Steam guard plate*
- Rubber apron*
- Power cord

* depending on model

## Safety instructions

Please follow the safety instructions under “Installation”.

## Delivery

Your dishwasher has been checked thoroughly in the factory to ensure that it is in working order. This may cause small water stains. These will disappear after the first wash cycle.

## Technical specifications

**Weight:**

max. 60 kg

**Voltage:**

220–240 V, 50 Hz or 60 Hz

**Connected load:**

2000–2400 W

**Fuse:**

10 - 16 A

**Power input:**

switched off 0.10 W

not switched off 0.10 W

**Water pressure:**

at least 0.05 MPa (0.5 bar), maximum 1 MPa (10 bar). At a higher water pressure: connect pressure-reducing valve ahead.

**Inlet rate:**

minimum 10 litres/minute

**Water temperature:**

for cold water connection only.

**Capacity:**

12–15 place settings (depending on model).

## Installation

The required installation dimensions can be found in the installation instructions. Level the appliance with the aid of the height-adjustable feet. Ensure that the appliance is situated securely on the floor.

- A built-under or integrated appliance which is installed subsequently as a free-standing appliance must be secured to prevent it from overturning, e.g. by screwing it to the wall or by installing it under a continuous worktop which is screwed to adjacent cupboards.
- The appliance can easily be installed in a fitted kitchen between wooden and plastic walls.

## Waste-water connection

1. The required work sequence can be found in the installation instructions. If required, fit a siphon with an drainage connection.
2. Connect the waste-water hose to the drainage connection of the siphon with the enclosed parts.

   Ensure that the drainage hose is not kinked, crushed or twisted and that there is no cover plate in the drainage to prevent the waste water from flowing out!

## Drinking water connection

1. Fasten the drinking water connection to the tap according to the installation instructions using the enclosed parts.

   Ensure that the drinking water connection is not kinked, crushed or twisted.
2. When replacing the appliance, always use a new water supply hose.

**Water pressure:**

at least 0.05 MPa (0.5 bar), maximum 1 MPa (10 bar). At a higher water pressure: connect pressure-reducing valve ahead.

**Inlet rate:**

minimum 10 litres/minute

**Water temperature:**

for cold water connection only.

## Electrical connection

- Connect the appliance to an alternating current only, ranging from 220 V to 240 V and 50 Hz or 60 Hz via a correctly installed socket with protective earth conductor. See rating plate for required fusing 31.
- The socket must be near the appliance and freely accessible following installation.

  If the plug is not freely accessible, an allpole disconnector with a contact opening of at least 3 mm must be fitted on the installation side to satisfy the relevant safety instructions.
- The connection may be modified by technicians only.
- A power cord extension may be purchased from customer service only.
- The appliance features a water damage protection system. Please note the system will not function **unless** the power supply is connected.

## Removing the appliance

Also observe
the sequence of worksteps here.

1. Disconnect the appliance from the power supply.
2. Turn off the water supply.
3. Undo the waste water and drinking water connection.
4. Loosen fastening screws for the furniture parts.
5. If fitted, remove the base panel.
6. Pull out the appliance, carefully pulling the hose behind.

## Transportation

Empty the dishwasher and secure loose parts.

**Drain the appliance according to the following steps:**

1. Turn on the tap.
2. Close the door.
3. Switch on ON/OFF switch [1].
4. Select programme with the highest temperature.

   The expected programme duration is indicated on the numerical display [5].
5. Press START button [4].

   Programme sequence starts.
6. After approx. 4 minutes press the START button [4] until 0:01 is indicated on the digital display.

   After approx. 1 min is indicated on the digital display 0:00.
7. Switch off ON/OFF switch [1].
8. Turn off the tap, disconnect supply hose and drain water.

Transport appliance upright only.

(This prevents residual water from running into the machine control and damaging the programme sequence.)

## Protection against frost

If the appliance is in a room where there is a risk of frost (e.g. holiday home), empty the appliance completely (see Transportation).

## Childproof lock (door lock) *

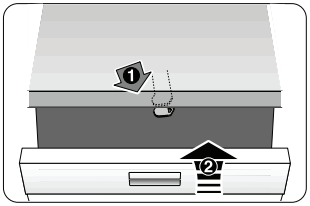

40

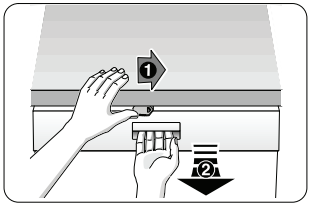

41

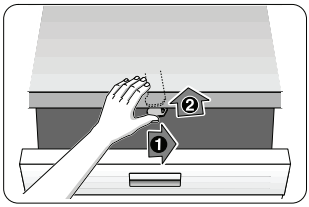

42

40 Activate the childproof lock.
41 Open the door with activated childproof lock.
42 Deactivate childproof lock.

### ⚠ Warning

Always close the appliance door completely when you leave the appliance.
This is the only way you can protect your children from potential dangers.

## Baking sheet spray head *

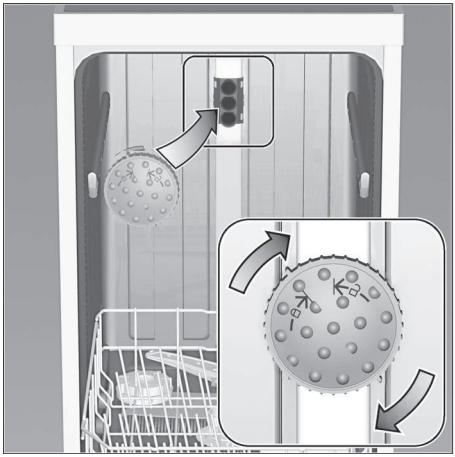

Large sheets or grilles and plates which have a diameter greater than 30 cm (gourmet plates, pasta plates, dinner plates) can be cleaned with the aid of the spray head.
To do this, remove the top basket and insert the spray head as illustrated in the diagram.

To ensure that the spray jet can reach all parts, arrange the baking sheets as illustrated (max. 4 baking sheets and 2 grilles).

Never operate the dishwasher without the top basket or baking sheet spray head!

* some models

## AquaStop guarantee (does not apply to appliances without AquaStop)

In addition to warranty claims against the seller based on the purchase contract and in addition to our appliance warranty we will pay damages under the following conditions:

1. If our AquaStop system is defective and causes water damage, we will make good the damage for private users.
   To ensure water damage protection, the appliance must be connected to the power supply.
2. This liability guarantee is valid for the service life of the appliance.
3. A prerequisite for the warranty claim is that the appliance has been correctly installed and connected with AquaStop according to our instructions.
   This also includes the correct installation of the AquaStop extension (original accessory). Our warranty does not extend to defective feed lines or fittings up to the AquaStop connection on the tap.
4. If your appliance is fitted with AquaStop, you can leave your appliance unattended during operation and leave the tap turned on afterwards.
   The tap should only be turned off if you are absent from home for a prolonged period, e.g. several weeks holiday.

☎ Repair order and advice on faults.

| | | |
|---|---|---|
| GB | 0344 892 8979 | Calls from a BT landline will be charged at up to 3 pence per minute. A call set-up fee of up to 6 pence may apply. |
| IE | 01450 2655 | 0.03 € per minute at peak. Off peak 0.0088 € per minute. |
| US | 800 944 2904 | toll-free |

Contact information for all countries can be found on the enclosed customer service list.

BSH Hausgeräte GmbH
Carl-Wery-Straße 34
81739 München, GERMANY

www.bosch-home.com

A Bosch Company

**9002017170 aus (0506) 640 EG**