NEFF

cook. create. inspire.

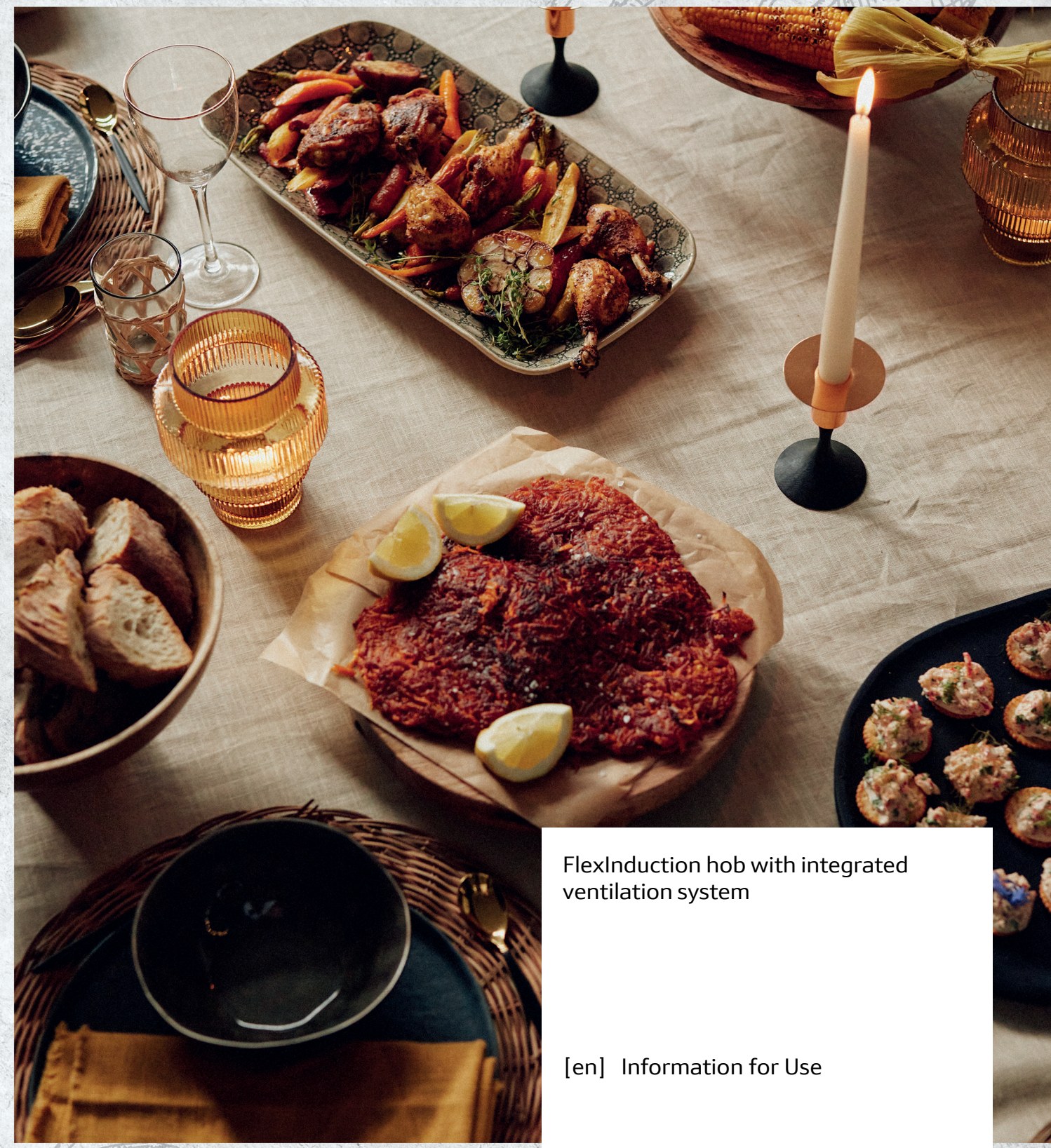

FlexInduction hob with integrated ventilation system

[en] Information for Use

V6..YX4..

You can find additional information and explanations online.
Scan the QR code on the title page.

Table of contents

1 Safety 2
2 Avoiding material damage 5
3 Environmental protection and saving energy 6
4 Suitable cookware 6
5 Familiarising yourself with your appliance 7
6 Control element Twist Pad® 9
7 Software update 10
8 Operating modes 10
9 Before using for the first time 10
10 Basic operation 11
11 Ventilation control 12
12 Favourite button 13
13 Flex Zone 13
14 Time-setting options 14
15 PowerBoost 14
16 PanBoost 15
17 Keep-warm function 15
18 PowerTransfer 15
19 Frying Sensor 16
20 Childproof lock 16
21 Pause 16
22 Individual safety switch-off 17
23 Basic settings 17
24 Cookware test 18
25 Home Connect 19
26 Cleaning and servicing 21
27 Troubleshooting 23
28 Disposal 25
29 Customer Service 25
30 Information regarding Free and Open Source Software 26
31 Declaration of Conformity 26
32 Test dishes 27

⚠ 1 Safety

Observe the following safety instructions.

1.1 Definition of the signal words

This is where you can find explanations for the safety signal words used in this manual.

⚠ WARNING
This indicates that death or serious injuries may occur as a result of non-observance of this warning.

ATTENTION
This indicates that damage to the appliance or other material damage may occur as a result of non-compliance with this warning.

Note: This alerts you to important information.

1.2 General information

- Read this instruction manual carefully.
- Keep the instructions, the appliance and the product information safe for future reference or for the next owner.
- Do not connect the appliance if it has been damaged in transit.

1.3 Intended use

Only a licensed professional may connect appliances without plugs. Damage caused by incorrect connection is not covered under the warranty.
The appliance can only be used safely if it is correctly installed according to the safety instructions. The installer is responsible for ensuring that the appliance works perfectly at its installation location.

Only use this appliance:
- To prepare meals and drinks.
- Under supervision. Never leave the appliance unattended when cooking for short periods.
- in private households and in enclosed spaces in a domestic environment.
- Up to an altitude of 2000 m above sea level.

Do not use the appliance:
- On boats or in vehicles.
- With an external timer or a separate remote control. This does not apply if operation with appliances included in EN 50615 is switched off.
- To extract hazardous or explosive substances and vapours.
- To extract small parts and liquids.

If you wear an active implantable medical device (e.g. a pacemaker or defibrillator), check with your doctor that it complies with Council Directive 90/385/EEC of 20th June 1990, EN 45502-2-1 and EN 45502-2-2, and that it has been chosen, implanted and programmed in accordance with VDE-AR-E 2750-10. If these conditions are satisfied, and if, in addition, non-metal cooking utensils and cookware with non-metal handles are used, it is safe to use this induction hob as intended.

1.4 Restriction on user group

This appliance may be used by children aged 8 or over and by people who have reduced physical, sensory or mental abilities or inadequate experience and/or knowledge, provided that they are supervised or have been instructed on how to use the appliance safely and have understood the resulting dangers.
Do not let children play with the appliance.
Children must not perform cleaning or user maintenance unless they are at least 15 years old and are being supervised.
Keep children under the age of 8 years away from the appliance and power cable.

1.5 Safe use

⚠ WARNING – Risk of suffocation!
Children may breathe in or swallow small parts, causing them to suffocate.
- ▸ Keep small parts away from children.
- ▸ Do not let children play with small parts.

Children may put packaging material over their heads or wrap themselves up in it and suffocate.
- ▸ Keep packaging material away from children.
- ▸ Do not allow children to play with packaging material.

⚠ WARNING – Risk of poisoning!
Risk of poisoning from flue gases being drawn back in. Room-air-dependent heat-producing appliances (e.g. gas, oil, wood or coal-operated heaters, continuous flow heaters or water heaters) obtain combustion air from the room in which they are installed and discharge the exhaust gases into the open through an exhaust gas system (e.g. a chimney). With the extractor hood switched on, air is extracted from the kitchen and the adjacent rooms. Without an adequate supply of air, the air pressure falls below atmospheric pressure. Toxic gases from the chimney or the extraction shaft are sucked back into the living space.

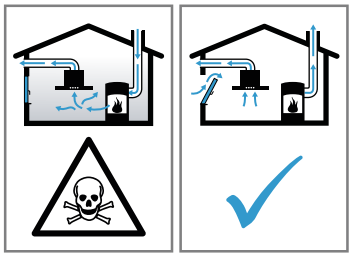

- ▸ Always ensure adequate fresh air in the room if the appliance is being operated in exhaust air mode at the same time as a room-air-dependent heat-producing appliance is being operated.
- ▸ It is only possible to safely operate the appliance if the pressure in the room in which the heating appliance is installed does not fall below 4 Pa (0.04 mbar). This can be achieved whenever the air needed for combustion is able to enter through openings that cannot be sealed, for example in doors, windows, incoming/exhaust air wall boxes or by other technical means. An incoming/exhaust air wall box alone is not sufficient to ensure compliance with the limit.
- ▸ In any case, consult a competent person (e.g. responsible chimney sweep). They are able to assess the house's entire ventilation setup and will suggest the suitable ventilation measures to you.
- ▸ Unrestricted operation is possible if the appliance is operated exclusively in circulating-air mode.

⚠ WARNING – Risk of fire!
Leaving fat or oil cooking on an unattended hob can be dangerous and may lead to fires.
- ▸ Never leave hot oil or fat unattended.
- ▸ Never attempt to extinguish a fire using water; instead, switch off the appliance and then cover with a lid or a fire blanket.

The cooking surface becomes very hot.
- ▸ Never place flammable objects on the cooking surface or in its immediate vicinity.

- Never place objects on the cooking surface.

The appliance will become hot.

- Do not keep combustible objects or aerosol cans in drawers directly underneath the hob.

Hob covers can cause accidents, for example due to overheating, catching fire or materials shattering.

- Do not use hob covers.

After every use, switch off the hob using the main switch.

- Do not wait until the hob turns off automatically as there are no longer any pots and pans on it.

Food may catch fire.

- The cooking process must be monitored. A short process must be monitored continuously.

Fatty deposits in the grease filters may catch fire.

- Never operate the appliance without a grease filter.
- Clean the grease filters regularly.
- Never work with naked flames close to the appliance (e.g. flambéing).
- Do not install the appliance near a solid fuel heating appliance (e.g. wood- or coal-burning) unless the heating appliance has a sealed, non-removable cover. There must be no flying sparks.

⚠ WARNING – Risk of burns!

The appliance and its parts that can be touched become hot during use, particularly the hob surround, if fitted.

- Caution should be exercised here in order to avoid touching heating elements.
- Young children under 8 years of age must be kept away from the appliance.

Hob guards may cause accidents.

- Never use hob guards.

Metal objects on the hob quickly become very hot.

- Never place metal objects (such as knives, forks, spoons and lids) on the hob.

The appliance becomes hot during operation.

- Allow the appliance to cool down before cleaning.
- If hot liquids penetrate the appliance, only remove the grease filter or the overflow container once the appliance has cooled down.

⚠ WARNING – Risk of electric shock!

Improper repairs are dangerous.

- Repairs to the appliance should only be carried out by trained specialist staff.
- Only use genuine spare parts when repairing the appliance.
- If the power cord or the appliance power cable of this appliance is damaged, it must be replaced with a special power cord or special appliance power cable, which is available from the manufacturer or its Customer Service.
- If the power cord of this appliance is damaged, it must be replaced by trained specialist staff.

If the appliance or the power cord is damaged, this is dangerous.

- Never operate a damaged appliance.
- If the surface is cracked, you must switch off the appliance in order to prevent a possible electrical shock. To do this, switch off the appliance via the fuse in the fuse box rather than at the main switch.
- Never operate an appliance with a cracked or fractured surface.
- Never pull on the power cord to unplug the appliance. Always unplug the appliance at the mains.
- If the appliance or the power cable is damaged, immediately switch off the fuse in the fuse box.
- Call customer service. →*Page 25*

An ingress of moisture can cause an electric shock.

- Do not use steam- or high-pressure cleaners to clean the appliance.

The insulation on cables of electrical appliances may melt if it touches hot parts of the appliance.

- Never bring electrical appliance cables into contact with hot parts of the appliance.

⚠ WARNING – Risk of injury!

Saucepans may suddenly jump due to liquid between the saucepan base and the hotplate.

- Always keep hotplates and saucepan bases dry.
- Never use icy-cold cookware that has been in the freezer.

When cooking in a bain marie, the hob and cooking container could shatter due to overheating.

- The cooking container in the bain marie must not directly touch the bottom of the water-filled pot.
- Only use heat-resistant cookware.

An appliance with a cracked or broken surface can cause cuts.

- Do not use the appliance if it has a cracked or broken surface.

Children and adults can be injured by the falling rotary knob.

- Remove the rotary knob before cleaning.
- Only place the rotary knob in the position specified on the control panel.
- Do not let children play with rotary knob.

⚠ **WARNING – Danger: Magnetism!**

Caution: Magnetism

Caution for people with pacemakers

Permanent magnets are used in the control panel or in the rotary knob. They may affect electronic implants, e.g. heart pacemakers or insulin pumps.

- Persons with electronic implants must stand at least 10 cm away from the control panel and the magnetic rotary knob.
- Never put the rotary knob in clothing pockets.

2 Avoiding material damage

This is where you can find the most common causes of damage and tips on how to avoid them.

Damage	Cause	Measure
Stains	Unsupervised cooking process.	Monitor the cooking process.
Stains, blisters	Spilled food, especially food with a high sugar content.	Remove immediately with a glass scraper.
Stains, blisters or fractures in the glass	Defective cookware, cookware with melted enamel or cookware with copper or aluminium base.	Use suitable cookware that is in a good condition.
Stains, discolouration	Unsuitable cleaning methods.	Only use cleaning agents that are suitable for glass ceramic, and only clean the hob when it is cold.
Blisters or fractures in the glass	Knocks or falling cookware, cooking accessories or other hard or pointed objects.	When cooking, do not hit the glass or let objects fall onto the hob.
Scratches, discolouration	Rough cookware bases or moving the cookware on the hob.	Check the cookware. Lift the cookware when moving it.
Scratches	Salt, sugar or sand.	Do not use the hob as a work surface or storage space.
Scratches	Material residue between the hob and the rotary knob.	Keep the rotary knob contact area clean.
Damage to the appliance	Cooking with frozen cookware.	Never use frozen cookware.
Damage to the cookware or the appliance	Cooking without contents.	Never place or heat empty cookware on a hot cooking zone.
Glass damage	Melted material on the hot cooking zone or hot pot lid on the glass.	Do not place greaseproof paper or aluminium foil nor plastic containers or pot lids on the hob.
Overheating	Hot cookware on the control panel or on the frame.	Never place hot cookware on these areas.

3 Environmental protection and saving energy

3.1 Disposing of packaging

The packaging materials are environmentally compatible and can be recycled.

- Sort the individual components by type and dispose of them separately.

3.2 Saving energy

If you follow these instructions, your appliance will use less energy.

Select the cooking zone to match the size of your pan. Centre the cookware on the hob.

Use cookware whose base diameter is the same diameter as the hotplate.
Tip: Cookware manufacturers often give the upper diameter of the saucepan. It is often larger than the base diameter.
- ✔ Unsuitable cookware or incompletely covered cooking zones consume a lot of energy.

Cover saucepans with suitable lids.
- ✔ Cooking without a lid consumes considerably more energy.

Lift lids as infrequently as possible.
- ✔ When you lift the lid, a lot of energy escapes.

Using a glass lid
- ✔ You can see into the pan through a glass lid without having to lift it.

Use pots and pans with flat bases.
- ✔ Uneven bases increase energy consumption.

Use cookware that is suitable for the quantity of food.
- ✔ Large items of cookware containing little food need more energy to heat up.

Cook with only a little water.
- ✔ The more water there is in the cookware, the more energy that is required to heat it up.

Turn down to a lower power level early on. Use a suitable ongoing power level.
- ✔ If you use an ongoing power level that is too high, you will waste energy.

Adjust the fan speed to the amount of steam produced during cooking.
- ✔ The lower the fan speed, the less energy is consumed.

If cooking produces large amounts of steam, select a higher fan speed in good time.
- ✔ The odours are distributed around the room less.

Switch the appliance off when you are not using it.

Ensure that there is sufficient ventilation when cooking.
- ✔ The appliance works more efficiently and with fewer operating noises.

Clean or replace the filters at regular intervals.
- ✔ The effectiveness of the filter is retained.

4 Suitable cookware

Cookware that is suitable for induction cooking must have a ferromagnetic base, i.e. it must be attracted by a magnet. The base must also match the size of the cooking zone. If cookware is not detected on a cooking zone, place this on the cooking zone with the next smallest diameter.

4.1 Size and characteristics of the cookware

To be able correctly detect the cookware, you must take the size and the material of the cookware into consideration.
All cookware bases must be perfectly flat and smooth.
Use Cookware test to check whether the cookware is suitable.
→ *"Cookware test", Page 18*

Cookware	Materials	Properties
Recommended cookware 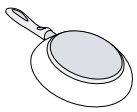	Stainless steel cookware in a sandwich design that distributes the heat well.	This cookware distributes the heat evenly, heats up quickly, and ensures that it can be detected easily.
	Ferromagnetic cookware made of enamelled steel, cast iron or special induction cookware made of stainless steel.	This cookware distributes the heat evenly, heats up quickly, and ensures that it can be detected.
Suitable	The base is not fully ferromagnetic.	If the ferromagnetic area is smaller than the base of the cookware, only the area that is ferromagnetic heats up. As a result, the heat is not distributed evenly.

Cookware	Materials	Properties
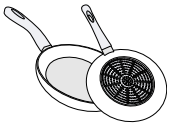	Cookware bases that contain aluminium.	These cookware bases reduce the ferromagnetic area, which means that less power is emitted to the cookware. This cookware may not be sufficiently detected or may not be detected at all, and therefore does not heat sufficiently.
Not suitable	Cookware made from normal thin steel, glass, clay, copper or aluminium.	

Notes

- Do not use adapter plates between the hob and the cookware.
- Do not heat up empty cookware and do not use cookware with a thin base, as this may become very hot.

5 Familiarising yourself with your appliance

5.1 Your new appliance

Information about your new appliance

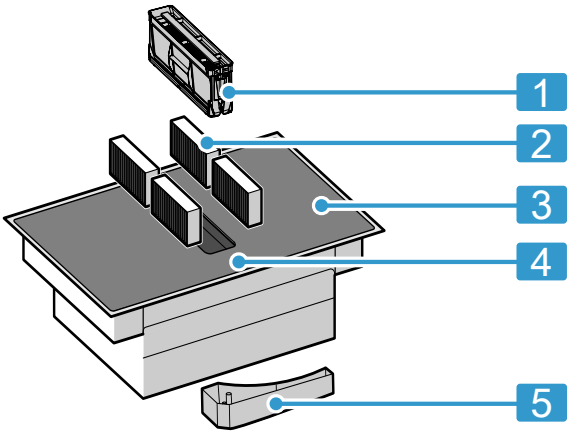

No.	Designation
1	Grease filter
2	Odour filter for circulating-air mode or acoustics filter for air extraction mode [1]
3	Hob
4	Control panel
5	Overflow container

5.2 Special accessories

Depending on the appliance model, various accessories are available and you can obtain these from specialist retailers, from our after-sales service or from our official website.

- Air extraction set
- Air recirculation set
- Odour filter for recirculating air mode
- Acoustics filter for air extraction mode

[1] Depending on the appliance specifications.

5.3 Control panel

Individual details, such as colour and shape, may differ from the figure.

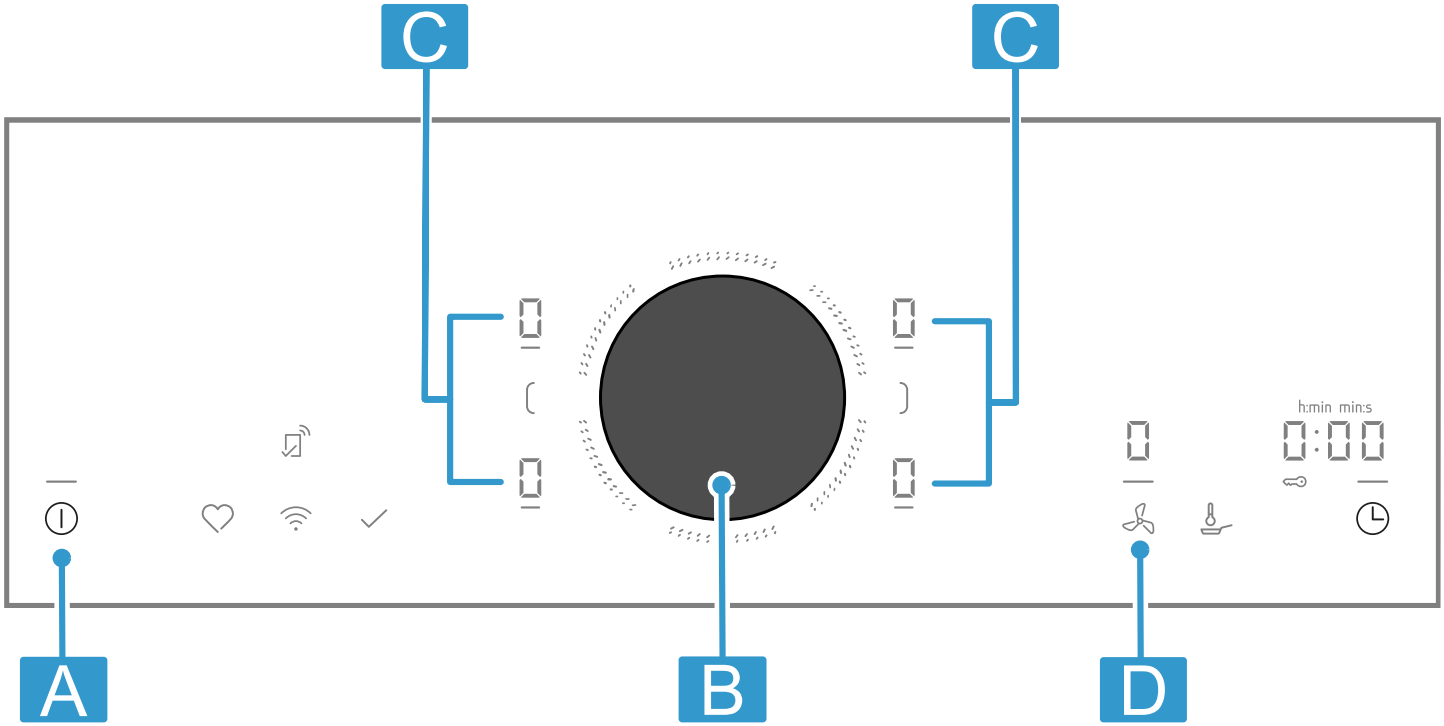

Letters	Designation
A	Main switch
B	Twist Pad®
C	Cooking zone
D	Ventilation sensor

Note: Always keep the control panel clean and dry.

Tip: Do not place any cookware near the displays or buttons. The electronics may overheat.

Control element Twist Pad®

You can use this magnetic knob to operate the hob with a simple rotary movement.
The indicator lights around the rotary knob indicate the status of the selection.

Touch buttons

When you switch on the hob, the symbols for the controls available at this time light up.

Sensor	Function
⏻	Main switch
[/]	Automatic linking/separating of cooking zones
	Frying Sensor
◷	Timer functions / Childproof lock
♡	Favourite button
	Connectivity

The buttons for the various functions light up white when the functions are available. If you select the buttons or make changes, the buttons light up red.

Indicators/symbols

Display		Meaning
		Switch-off timer
		Frying Sensor
	1-9	Power levels
	P	PowerBoost
		Childproof lock

Buttons in connection with Home Connect

As soon as the connection to Home Connect has been established, the following buttons are available:

Sensor	Function
✓	Accept settings from another appliance

If lights up, search for further information in the Home Connect app.

5.4 Distribution of the cooking zones

The specified power has been measured with the standard pots which are described in IEC/EN 60335-2-6. The

power may vary depending on the size of the cookware or cookware material.

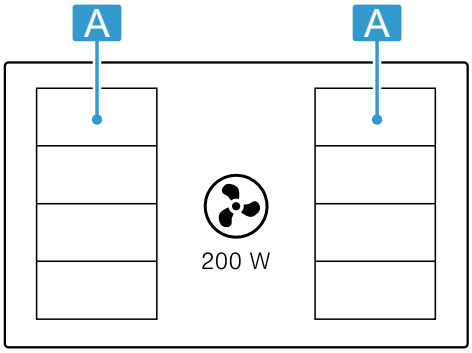

Area	Highest power level	
A	Power level 9 PowerBoost	2200 W 3700 W
A	Power level 9 PowerBoost	3300 W 3700 W

At power level 9, the hob reaches the power indicated in the table in order to reduce the preheating times and keeps them running for a certain time, provided the other cooking zone on the same side is not in use.

5.5 Cooking zone

Before you start cooking, check whether the size of the cookware fits the cooking zone that you want to use for cooking:

Area	Cooking zone type
	Single-circuit cooking zone
	Flex Zone → *"Flex Zone", Page 13*

5.6 Residual heat indicator

The hob has a residual heat indicator for each cooking zone. Do not touch the cooking zone if the residual heat indicator is lit.

Display	Meaning
H	The cooking zone is hot.
h	The cooking zone is warm.

5.7 Saturation indicator

The hob is equipped with a saturation indicator. When the anti-odour filters are saturated, F lights up and the filter must be replaced.
→ *"Odour filter or acoustics filter", Page 22*

6 Control element Twist Pad®

You can use this magnetic knob to select cooking zones, power levels and other hob settings. The knob can be positioned in the central area of the control panel where it sticks. In addition, the knob can be removed at any time.
It consists of two parts, which can be easily removed. If it is removed from a metal surface, the bottom part may remain fixed to this surface. Put both parts back together again to use it.

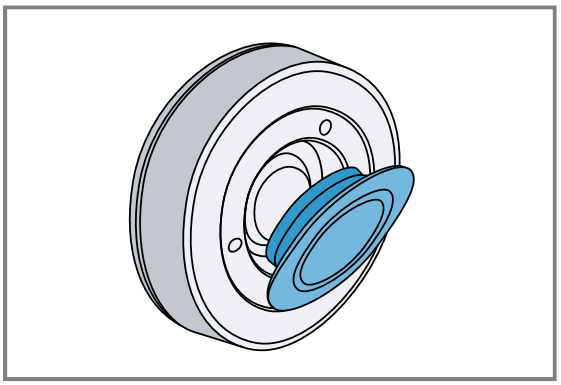

6.1 Positioning and operating Twist Pad®

1. Use ① to switch on the hob.
2. Place the knob in the central area of the control panel at the point marked with • on the glass.
3. To switch on a cooking zone, push the rotary knob at the level of the required cooking zone.
4. Turn the knob and select a power level.

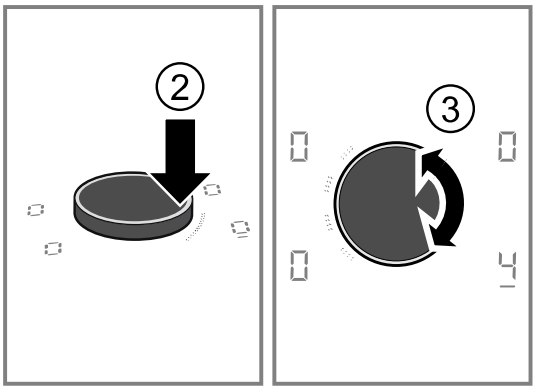

6.2 Instructions for use

A strong magnet is located inside the rotary knob. You should therefore note the following:

- Keep the rotary knob away from magnetic data carriers such as credit cards and cards with magnetic strips. This may damage the data carrier. The magnet may also cause faults on televisions and screens.
- Metal particles stuck to the bottom may scratch the surface of the hob. Always keep the rotary knob clean. Soiling may impair its function. See "Cleaning the knob". →*Page 21*

6.3 Removing Twist Pad®

You can remove the rotary knob from the cooking zone during the cooking process.
If you remove the rotary knob, the Pause function is switched on for 10 minutes. →*Page 16* If you do not reset the rotary knob to its position before this time elapses, the hob switches off.

⚠ **WARNING – Risk of fire!**
If you place a metal object on the area of the rotary knob during these 10 minutes, the cooking zone may continue to heat up.
- Always switch off the cooking zone at the main switch.

6.4 Operation without rotary knob Twist Pad®

If you lose the rotary knob, or in other situations, you can operate the hob without the TwistPad®. Proceed as follows:

1. Use ⏻ to switch on the hob.
2. Within the next 5 seconds, press and hold ᯤ and ♡ at the same time for 4 seconds. A warning tone sounds and ✓ lights up.
3. Press ✓ repeatedly until the display for the required hob lights up.
4. Then set the required power level using ᯤ or ♡.

✔ The cooking zone is switched on and heats up.

Notes
- In this mode, only the basic function for the hotplate is available.
- You can always position the rotary knob in the programming zone again.

7 Software update

If the appliance is connected to Home Connect, some functions may be available with a software update.

More information on the availability of additional functions can be found on the website *www.neff-home.com*

8 Operating modes

You can use your appliance in air extraction mode or circulating-air mode.

8.1 Air extraction mode

The air which is drawn in is cleaned by the grease filters and conveyed to the exterior by a pipe system.

The air must not be discharged into a flue that is used for exhausting fumes from appliances burning gas or other fuels (not applicable to appliances that only discharge the air back into the room).
- If the exhaust air is to be conveyed into a non-functioning smoke or exhaust gas flue, you must obtain the consent of the heating engineer responsible.
- If the exhaust air is conveyed through the external wall, a telescopic duct should be used.

8.2 Air recirculation

The air which is drawn in is cleaned by the grease filters and an odour filter, and conveyed back into the room.

To bind odours in air recirculation mode, you must install an odour filter. The different options for operating the appliance in air circulation mode can be found in our catalogue. Alternatively, ask your dealer. The required accessories are available from specialist retailers, from our after-sales service or from the online shop.

Note: When cooking intensively and for a long time, moisture is released into the air in the room. When using the appliance in air recirculation mode, we recommend ventilating the kitchen adequately, e.g. by briefly opening a window to remove excessive moisture.

9 Before using for the first time

Observe the following recommendations.

9.1 Initial cleaning

Remove any leftover packaging from the hob surface and wipe the surface with a damp cloth. You can find a list of recommended detergents on the official website *www.neff-home.com*.
More information on care and cleaning. →*Page 21*

9.2 Preparing the appliance

To ensure correct operation, you must arrange the components in this order:

1. Insert the filter.
2. Insert the metal grease filter.

Note: Never operate the appliance without the metal grease filter and the overflow container.

9.3 Cooking with induction

In comparison to conventional hobs, induction technology brings with it a series of changes and has a number of benefits such as time savings when cooking and frying, energy savings as well as greater ease of cleaning and care. It also offers improved heat control as the heat is generated directly in the cookware.

9.4 Cookware

You can find a list of recommended cookware on the official website *www.neff-home.com*.
Further information on suitable cookware. →*Page 6*

9.5 Setting the operating mode

The appliance is supplied with a preset circulating-air mode.

When your hob is installed with an air outlet to the outside, you must configure the setting c17 to this mode. You can find additional information about this in the section entitled
→ *"Basic settings", Page 17*

9.6 Setting Home Connect

When you first switch on the appliance, you will be prompted to set your home network. lights up for a few seconds on the display panel.
To begin the connection to Home Connect, touch and proceed in accordance with the information in the section .
To end the setting, switch off the hob.
You can also adjust the Home Connect setting at a different time.

10 Basic operation

10.1 Switching on the hob

- Press ⏻.
  The symbols for the cooking zones and the currently available functions light up.
- ✔ The hob is ready to use.

ReStart

- If you switch the appliance on within four seconds of switching it off, the hob operates with the settings that were previously set.

10.2 Switching the hob off

- Touch ⏻ until the displays go out.
- ✔ All cooking zones are switched off.

Note: If all of the cooking zones are switched off for longer than 59 seconds, the hob is automatically switched off.

10.3 Setting the power level in the cooking zones

The cooking zone has 17 power levels, which are displayed from 1 to 9 with intermediate values. Select the best power level for the food and the planned cooking process.

1. Select the cooking zone by pressing the rotary knob next to the mark for the required cooking zone.
- ✔ lights up brighter.
2. Turn the rotary knob to select the required power level.
- ✔ The power level has been set.

Note: If no cookware is placed on the cooking zone or the pot is not suitable, the selected power level flashes. After a certain period of time, the cooking zone switches itself off.

QuickStart

- If you set one or more items of cookware on any cooking zone before switching on the appliance, the hob detects this and automatically selects the cooking zone for one of the items of cookware. Then select the power level in the next 59 seconds, or the hob will switch off.

Changing the power level and switching off the cooking zone

1. Select the cooking zone.
2. Use the rotary knob to change the power level or set it to 0.
- ✔ The cooking zone's power level is changed or the cooking zone is switched off.

10.4 Cooking recommendations

The table shows which power level (_=≡) is suitable for which food. The cooking time (◷ min) may vary depending on the type, weight, thickness and quality of the food. To preheat, set power level 8–9.

	_=≡	◷ min
Melting		
Butter, honey, gelatine	1 - 2	-
Heating and keeping warm		
Boiled sausages [1]	3 - 4	-
Defrosting and heating		
Spinach, frozen	3 - 4	15 - 25
Poaching, simmering		
Potato dumplings [1]	4.5 - 5.5	20 - 30
Whisked sauces, e.g. Béarnaise sauce, Hollandaise sauce	3 - 4	8 - 12
Boiling, steaming, braising		

[1] Without lid

	⎓	◷ min
Rice, with double the volume of water	2.5 - 3.5	15 - 30
Unpeeled potatoes	4.5 - 5.5	25 - 35
Pasta [1]	6 - 7	6 - 10
Soups	3.5 - 4.5	15 - 60
Vegetables	2.5 - 3.5	10 - 20
Stew in a pressure cooker	4.5 - 5.5	-
Braising		
Pot roast	4 - 5	60 - 100
Goulash [2]	3 - 4	50 - 60
Roasting/frying with a small amount of fat [1]		
Escalope, plain or breaded	6 - 7	6 - 10
Steak, 3 cm thick	7 - 8	8 - 12
Poultry breast, 2 cm thick	5 - 6	10 - 20
Hamburgers (2 cm thick)	6 - 7	10 - 20

	⎓	◷ min
Fish and fish fillet, breaded	6 - 7	8 - 20
Prawns and scampi	7 - 8	4 - 10
Sautéing fresh vegetables and mushrooms	7 - 8	10 - 20
Frozen dishes, e.g. stir-fries	6 - 7	6 - 10
Omelette (cooked one after the other)	3.5 - 4.5	3 - 10
Frying (150 to 200 g per batch in 1 to 2 l oil, deep-fried in batches) [1]		
Frozen products, e.g. chips, chicken nuggets	8 - 9	-
Vegetables, mushrooms, breaded, beer-battered or tempura	6 - 7	-
Small baked items, e.g. doughnuts, battered fruit	4 - 5	-

11 Ventilation control

The cooking zone has an air extraction system integrated in the cooking surface.
The air extraction system is controlled by the air quality sensor, which automatically detects the cooking steam and selects the optimal level.
The functions for controlling the air extraction system are described below.
You can change the factory settings at any time.
→ *"Basic settings", Page 17*

Note: Use shallow cookware to improve performance. With deep cookware, place the lid at an angle.

11.1 Automatic start for the ventilation system

If you assign a power level to the first cooking zone, the air extraction system will start up automatically. The air quality sensor automatically detects the cooking steam and selects the optimal setting. The A display lights up. After the automatic start, you can change the ventilation setting. Changing or deactivating the ventilation setting.
→ *Page 12*

11.2 Sensor functions

You can switch the air quality sensor ventilation mode on and off at any time.
The air quality sensor automatically detects the cooking steam and selects the optimal ventilation setting.
To switch off, select the required ventilation setting or set the rotary knob to 0.
To switch the function on again, turn the rotary knob until A lights up.

11.3 Ventilation control

The cooking zone has 17 ventilation settings, which are displayed from 1 to 9 with intermediate values.

Switching on the ventilation system

1. Press ✇.
✔ The ventilation system starts at the preset power level.
2. Use the rotary knob to select the required ventilation setting.
✔ The power level for the ventilation system lights up.

Changing or switching off the ventilation system

1. Press ✇.
2. Use the rotary knob to select the required ventilation setting or change it to 0.

11.4 Intensive ventilation settings

There are two intensive ventilation settings at which the ventilation system operates for a short time at a higher power level.

Switching on the intensive settings

1. Press ✇.
2. Select the required intensive setting:
   - **Intensive setting I**: Turn the rotary knob until 9 lights up. Turn the rotary knob again until P 1 lights up.
   - **Intensive setting II:** Turn the rotary knob until P 2 lights up.

Note: After approx. 8 minutes, the appliance automatically switches back to ventilation setting 9.

[1] Without lid
[2] Preheat to power level 8 - 8.5

Changing or switching off intensive settings

1. Press ⁂.
2. Use the rotary knob to select the required ventilation setting or change it to 0.

11.5 Fan run-on for the ventilation system

The ventilation system continues to run for a few minutes after the cooking zone is switched off using the main switch.

This assumes that the cooking zone has been switched on for at least one minute and the ventilation system is running.
Once the corresponding time has elapsed, the ventilation system switches off automatically. This time depends on the operating mode in which the appliance is installed.
When the ventilation system is switched on, the ventilation setting lights up. The ventilation system can be switched off at any time by pressing ⁂.

12 Favourite button

You can use the function to select two functions or cooking settings to make them quickly accessible on ♡.

12.1 Assigning Favourite button functions

Requirement: Connect the appliance to Home Connect. Home Connect

1. To assign ♡ functions, open the Home Connect app and follow the instructions.
2. As soon as you have assigned the functions, you can use them:

✔ Function 1: Press ♡ briefly.
✔ Function 2: Press and hold ♡.

Note: If you have not assigned any functions, ♡ switches off once the hob is switched on.

13 Flex Zone

The flexible cooking zone allows you to position cookware of any shape or size any way you like. It consists of four inductors that work independently of each other. When the flexible cooking zone is in use, only the area that is covered by cookware is activated.

13.1 Positioning the cookware

The flexible cooking zone can be configured in two ways, depending on which cookware is used. In order to guarantee good thermal detection and heat distribution, we recommend positioning the cookware in the centre, as shown in the figures.

As a connected cooking zone

Recommended for cooking with just one item of cookware.

- Position the cookware depending on the size:

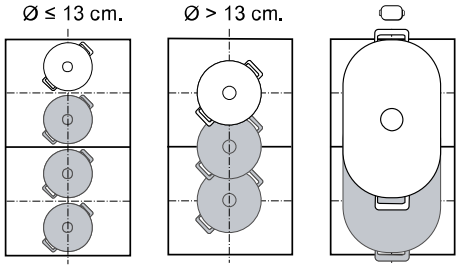

- Recommended oblong cookware ▭:

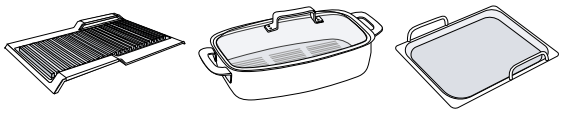

As two separate cooking zones

Recommended for cooking with two items of cookware. You can use the front and rear zone independently of one another, and set a separate power level for each zone.

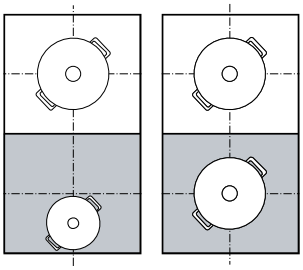

13.2 Switching on Flex Zone

1. Place the cookware on the cooking zone.
2. The appliance detects the cookware and selects the cooking zone.

✔ The cooking zones split or connect automatically depending on the size and position of the cookware.
✔ Once the flexible zone is connected, (/) lights up red.

Notes

- By touching (/), you can manually change the settings for the cooking zone.

- If you move or lift the cookware from an active connected cooking zone, an automatic search starts. Each item of cookware that is found within the cooking zone during this search is heated at the previously selected power level.

14 Time-setting options

Your hob has various functions for setting the cooking time:

- Switch-off timer
- Timer

The ◷ button is assigned to the Switch-off timer function by default. However, you can also assign one of the above-mentioned functions to the sensor.You can change these settings via the Home Connect app or in the basic settings →*Page 17*.

14.1 Switch-off timer

You can use the function to programme a cooking time in a cooking zone and its automatic switch-off once the set time has elapsed.

Switching on Switch-off timer

1. Select the cooking zone and the required power level.
2. Touch ◷.
✔ I→I and 0:00 light up.
3. To set the required cooking time, turn the rotary knob within 10 seconds.
4. Touch ◷ to confirm.
✔ The cooking time begins to elapse. An audible signal sounds 1 minute before the selected time elapses. You can check the status of the food and, if required, extend the cooking time.
✔ Once the cooking time has elapsed, the cooking zone is switched off and a signal sounds.

Notes

- If a cooking time has been programmed in a cooking zone in which the Frying Sensor is activated, the programmed cooking time will start to count down as soon as the selected temperature level has been reached.
- To switch the display between the operating temperature Frying Sensor and the programmed cooking time, press the selected temperature.

Changing or switching off Switch-off timer

1. Select the cooking zone and then touch ◷.
2. Use the rotary knob to change the cooking time or set it to 0:00 to switch off the function.

14.2 Timer

You can use the function to activate a timer. This function operates independently of the cooking zones and other settings. It does not automatically switch off the cooking zones.

Switching on Timer

Requirement: Assign the function to ◷.

1. Touch ◷.
2. Turn the rotary knob to select the required time.
✔ The time starts to elapse.
✔ A signal tone sounds and the displays flash once the time has elapsed.

Changing or switching off the Timer

1. Touch ◷.
2. Use the rotary knob to change the time or set it to 0:00 to switch off the function.

15 PowerBoost

You can use this function to heat up large volumes of water more quickly than with 9.
This function is available for all cooking zones, provided the other cooking zone on the same side is not in use.

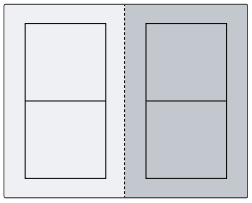

15.1 Switching on PowerBoost

1. Select the cooking zone.
2. Turn the rotary knob until power level 9 appears.
3. Turn the rotary knob again until P lights up.
✔ The function is switched on.

Note: You can also switch on this function when cooking with a connected FlexZone.

15.2 Switching off PowerBoost

1. Select the cooking zone.
2. Turn the rotary knob and select a different power level.
✔ P goes out.
✔ The function is deactivated.

Note: In certain circumstances, the appliance switches this function off to protect the electronic elements inside the hob.

16 PanBoost

You can use this function to heat up pans more quickly than with 9. Do not use the PowerBoost function with frying pans – this may damage the coating.
You can activate the function via Home Connect or Favourite button.
This function is available for all cooking zones, provided the other cooking zone on the same side is not in use. Otherwise, b and 9 flash on the display for the selected cooking zone. 9 then switches on automatically.

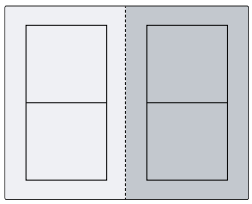

16.1 Recommended applications

- Do not place a lid on the pan.
- Never leave pans unattended when they are heating up.
- Only use cold pans.
- Use pans with a completely flat base. Do not use pans with a thin base.

16.2 Switching on PanBoost

Requirement: Assign the function to ♡. .

→ *"Favourite button", Page 13*

1. Select the cooking zone.
2. Press ♡.
3. b lights up.

✔ The function is activated.

Note: You can also switch on this function when cooking with a connected FlexZone.

16.3 Switching off PanBoost

1. Select the cooking zone.
2. Turn the rotary knob and select a different power level.

✔ b goes out.
✔ The function is deactivated.

Note: To avoid high temperatures, this function automatically switches itself off after 30 seconds.

17 Keep-warm function

You can use this function to melt chocolate or butter, and to keep meals warm.
You can activate the function via Home Connect or Favourite button.

17.1 Switching on Keep-warm function

Requirement: Assign the function to ♡. .

→ *"Favourite button", Page 13*

1. Select the required cooking zone.
2. Press ♡.
   L lights up.

✔ The function is switched on.

17.2 Switching off Keep-warm function

1. Select the cooking zone.
2. Turn the rotary knob and set it to 0.
   L goes out.

✔ The function is deactivated.

18 PowerTransfer

You can use this function to transfer the power level and the programmed cooking time from one cooking zone to another.

18.1 PowerTransfer

Requirement: Move the cookware to a cooking zone which is not switched on, which you have not yet preset or on which no other cookware has been previously placed.

1. Move the cookware.

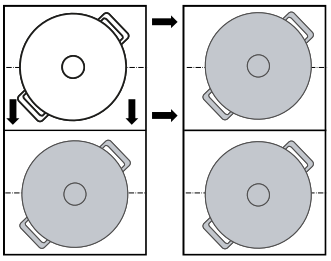

✔ The cookware is detected.
✔ The previously selected power level and ‾ flash alternately on the display for the new cooking zone.

2. In order to implement the settings, use the rotary knob to select the new cooking zone.

✔ The original cooking zone is set to 0.
✔ The settings are transferred to the new cooking zone.

Note: If you place a new item of cookware on a different cooking zone before you have confirmed the settings, you can use this function for the new item of cookware.

19 Frying Sensor

This function allows you to melt, prepare sauces, sauté, deep fry or fry while keeping the temperature under control.
Instead of constantly adjusting the power level during cooking, select the required target temperature once at the start. The sensors under the glass ceramic measure the temperature of the cookware and keep this constant throughout the entire cooking process.
This function is available on all cooking zones marked with this symbol ⚠.

Functions	Temperature
Melting	70 - 80 °C
Preparing sauces	110 - 120 °C
Frying	140 °C
Frying	160 °C
Frying	180 - 200 °C
Frying	220 °C

19.1 Recommended cookware

Special cookware has been developed for this function, which delivers the best results.
The recommended cookware is available from customer service, specialist retailers or our online shop *www.neff-home.com*.

Note: You can also use other cookware. Depending on the composition of the cookware, the achieved temperature may differ from the selected temperature level.

19.2 Switching on the Frying Sensor

1. Place the empty cookware on a cooking zone.
2. Selecting a hotplate
3. Press ⚠.
✔ 🌡, t and the preset temperature light up on the display for the selected cooking zone.
4. Use the rotary knob to select the required temperature.
✔ 🌡 flashes on the control panel until the set temperature is reached.
✔ The selected temperature and the development of the temperature reached in the pan flash alternately until the selected temperature has been reached.
✔ The temperature shown on the displays is approximate and may differ from the actual temperature in the frying pan.
✔ Once the temperature has been reached, a signal tone sounds and 🌡 as well as the temperature symbol stop flashing.
5. Add the frying fat and then the food to the frying pan.

Note: If you need to cook with more than 250 ml oil, add the oil and wait a few seconds before you add the food.

19.3 Switching off Frying Sensor

▸ Select the cooking zone and touch ⚠.

19.4 Recommendations for cooking with Frying Sensor

The enclosed documentation contains a table with recommendations for cooking with Frying Sensor.

20 Childproof lock

The hob is equipped with a childproof lock. You can use this to prevent children from switching on the hob.

20.1 Switching on Childproof lock

Requirement: The hob must be switched off.
▸ Touch and hold ◷ for 4 seconds.
✔ ⊸ lights up for approx. 10 seconds.
✔ The hob is locked.

20.2 Deactivating the childproof lock

1. Switch on the hob.
2. Touch and hold ◷ for four seconds.
✔ The lock is released.

20.3 Automatic childproof lock

You can also activate the childproof lock automatically every time the hob is switched off.
You can find out how to switch the function on and off in the "Basic settings" section →*Page 17*.

21 Pause

You can use the function to pause and resume active cooking processes for up to 10 minutes without having to change the settings you have selected.

You can switch the function on to clean the control panel, for example.

21.1 Activating the Pause function

- Remove the rotary knob from the control panel.
- ✔ II flashes on the cooking zone displays.
- ✔ All active cooking processes are stopped. The settings are retained.
- ✔ The function is activated.

21.2 Deactivating the Pause function

- Place the rotary knob back on the control panel.
- ✔ The function is deactivated. The cooking processes continue.

Note: After approximately 10 minutes, the cooking zone automatically switches off.

22 Individual safety switch-off

Activate the safety function if one cooking zone is in operation for an extended period and you do not change any settings. The cooking zone displays F8 and switches itself off.
The time depends on the selected power level.

Power level	Time
1.0 - 1.5	10 hours
2.0 - 3.5	5 hours
4.0 - 5.0	4 hours
5.5 - 6.5	3 hours
7.0 - 7.5	2 hours
8.0 - 9.0	1 hour

Press any button to switch on the cooking zone.

23 Basic settings

You can configure the basic settings for your appliance to meet your needs.

23.1 Overview of the basic settings

Display	Setting	Value
c 1	Childproof lock → *"Childproof lock", Page 16*	0 - Manual. [1] 1 - Automatic. 2 - Function switched off.
c 2	Audible signals	0 - The confirmation signal, the fault signal and the signal for incorrect use are deactivated. 1 - The fault signal is activated. 2 - The confirmation signal and the signal for incorrect use are activated. 3 - All signal tones are switched on [1].
c 3	Volume of the audible signals	1 - Quiet. 2 - Medium. [1] 3 – Loud.
c 6	Assign one of the time-setting programme functions to ◷ on the control panel. → *"Time-setting options", Page 14*	1 - Switch-off timer. [1] 2 - Timer.
c 7	Power limitation This enables you to limit the total power of the hob, if required, due to the circumstances of your electrical installation. Observe the regulations of the local electricity suppliers. The available settings depend on the maximum power of the hob. You can find more information on the rating plate. If the function is switched on and the hob has reached the set power limit, the required and permitted power level flashes and you cannot select a higher power level.	The power is increased by 500 W with each level. 0 – Switched off. Maximum power of the hob [1]. 1 - 1000 W. Lowest power setting. 1.5 - 1500 W. ... 3 - 3000 W. 3.5 - 3500 W. 4 - 4000 W. 4.5 - 4500 W. ... 9 - Maximum power of the hob.
c 8	Demo mode	0 - Switched off. [1] 1 - Switched on.

[1] Factory setting

Display	Setting	Value
	Demonstration mode for the hob: When you switch on the hob, dE lights up for a few seconds and the cooking zones do not heat up.	
c 12	Cookware test You can use this function to test the quality of the cookware. → *"Cookware test", Page 18*	0 - Not suitable. 1 - Not optimal. 2 - Suitable.
c 17	Set circulating-air mode or air extraction mode.	0 - Configure circulating-air mode. [1] 1 - Configure air extraction mode.
c 18	Set the automatic ventilation system start.	0 - Switched off. 1 - The ventilation system starts at the preset power level. 2 - The ventilation system starts during operation via the sensor. [1]
c 19	Setting the sensor sensitivity for the ventilation system.	1 - Lowest sensor sensitivity setting. 2 - Medium sensor sensitivity setting. [1] 3 - Highest sensor sensitivity setting.
c 20	Set the fan run-on for the ventilation system.	0 - Switched off. 1 - Switched on. If your hob is working in air extraction mode, the ventilation system is switched on at the power level for approx. 6 minutes. If the hob is working in air recirculation mode, the ventilation system is switched on at the power level for approx. 30 minutes. [1] 2 - Switched on via the sensor.
c 0	Restoring factory settings	0 - Individual settings [1]. 1 - Factory settings.

23.2 To go to the basic settings

Requirement: The hob must be switched off.

1. To switch on the hob, touch ⏻.
2. Within the next 10 seconds, touch and hold ◷ for 4 seconds.

Product information	Display
Customer service directory	0 1 ,
Production number	Fd
Production number 1	02-
Production number 2	05

✔ The first four displays provide the product information. Touch ◷ to view the individual displays.

3. Touch ◷ to access the basic settings.
✔ c 1 and 0 light up as a presetting.
4. Touch ◷ repeatedly until the desired setting appears.
5. Use the rotary knob to change the desired setting.
6. Touch and hold ◷ for 4 seconds.
✔ The settings are saved.

23.3 Discarding changes to the basic settings

▸ Touch ⏻.
✔ All changes are discarded and not saved.

24 Cookware test

The quality of the cookware has a major influence on the speed and the result of the cooking process.
You can use this function to test the quality of the cookware.
Before the test, ensure that the diameter of the cookware base corresponds to the diameter of the cooking zone being used.
Access is via the basic settings. →*Page 17*

24.1 Carrying out Cookware test

Requirement: As a single cooking zone, the flexible cooking zone is set in such a way that only the individual item of cookware is checked.

1. At room temperature, place the cookware with approx. 200 ml water in the centre of the cooking zone that best fits the base of the cookware in terms of size.

[1] Factory setting

2. Call up the basic settings and select c 12.
3. Turn the rotary knob. u flashes in the cooking zones.
✔ The function is switched on.
✔ After 10 seconds, the result appears in the cooking zone displays.

24.2 Checking the result

You can see what the result means for the quality and speed of the cooking process in the following table.

Result	
0	The cookware is not suitable for the cooking zone and therefore does not heat up.
1	The cookware is taking longer to heat up than expected and cooking is not progressing as well as it ought to.
2	The cookware is heating up correctly and cooking is progressing well.

To switch the function on again, turn the rotary knob.

25 Home Connect

This appliance is network-capable. Connecting your appliance to a mobile device lets you control its functions via the Home Connect app, adjust its basic settings and monitor its operating status.
The Home Connect services are not available in every country. The availability of the Home Connect function depends on the availability of the Home Connect services in your country. You can find information about this at: *www.home-connect.com*.
The Home Connect app guides you through the entire login process. Follow the instructions, noting the information in the Home Connect app.

Notes

- Please note the safety precautions in this instruction manual and make sure that they are also observed when operating the appliance via the Home Connect app.
  → *"Safety", Page 2*
- Operating the appliance on the appliance itself always takes priority. During this time it is not possible to operate the appliance using the Home Connect app.
- In networked standby mode, the appliance requires a maximum of 2 W.

25.1 Setting up Home Connect

Requirements

- The appliance is connected to the power supply and is switched on.
- You have a mobile device with a current version of the iOS or Android operating system, e.g. a smartphone.
- The appliance is receiving signals from the WLAN home network (Wi-Fi) at its installation location.
- The mobile device and the appliance are within range of your home network's Wi-Fi signal.

1. Scan the following QR code.

You can install the Home Connect app and connect your appliance via the QR code.

2. Follow the instructions in the Home Connect app.

25.2 Wi-Fi symbol

The Wi-Fi indicator on the main screen changes according to the status and quality of the connection and the availability of the Home Connect server.

Status	Description
Lights up white.	No network connection saved.
Lights up red.	Network connection saved and Wi-Fi active.
Flashes red.	▪ Network connection or connection to another appliance is being established. ▪ Network settings are reset.

25.3 Adding or removing a Wi-Fi home network

The following overview shows how to add or remove a Wi-Fi home network.

Wi-Fi home network status	Action
No Wi-Fi home network stored.	To add the Wi-Fi home network, briefly press .
The Wi-Fi home network has now been saved.	To pair another appliance, press and hold .
The Wi-Fi home network has now been saved.	To reset the Wi-Fi home network settings, press and hold . If flashes, press and hold again.

25.4 Switching off the network connection

▸ Press and hold . If flashes, press and hold again.
✔ The connection to the Wi-Fi network is switched off and the network connections are disconnected.

Note: To switch the network connection back on, see .
→ *"Adding or removing a Wi-Fi home network", Page 19*

25.5 Changing settings via the Home Connect app

You can use the Home Connect app to change the settings for the cooking zones and send them to the hob.

Requirement: The hob is connected to the Wi-Fi and to the Home Connect app.

1. Select the setting in the Home Connect app and send it to the hob.
   Follow the instructions in the Home Connect app.
   Settings that you send from the Home Connect app to the hob must be confirmed on the hob.
✔ As soon as cooking settings are transmitted to a cooking zone, the display starts to flash, depending on the setting.
2. Press ✓ to confirm the setting.
3. To discard the setting, press any other touch field on the hob.

25.6 Activating Bluetooth® detection

This wireless technology enables automatic presence detection. Provided you are near the hob, you no longer need to confirm settings from your mobile device on the hob. If you send settings to a cooking zone, you can confirm these directly from your mobile device.

Requirements

- The hob is connected to the Wi-Fi and to the Home Connect app.
- The Bluetooth® system is connected to the mobile device.
- The user is near the hob.

1. Open the Home Connect app.
2. In order to set Bluetooth® detection, follow the instructions in the Home Connect app.

Note: The Bluetooth® connection is deactivated if the hob is disconnected and switches to energy-saving mode. The Bluetooth® connection can also be deactivated via the Home Connect app.

25.7 Software update

Your appliance's software can be updated using the software update function, e.g. for the purposes of optimisation, troubleshooting or security updates.
To do this, you must be a registered Home Connect user, have installed the app on your mobile device and be connected to the Home Connect server.
As soon as a software update is available, you will be informed via the Home Connect app and will be able to start the software update via the app. Once the update has been successfully downloaded, you can start installing it via the Home Connect app if you are in your home network (Wi-Fi). The Home Connect app informs you once installation is successful.

You can find the current software version in the Home Connect app under the appliance information for the appliance.

Notes

- The software update consists of two steps.
  - The first step is downloading.
  - The second step is installation on your appliance.
- You can continue to use your appliance during downloading. Depending on your personal settings in the app, software updates can also be set to download automatically.
- Installation takes a few minutes. You cannot use your appliance during installation.
- We recommend you install security updates as soon as possible.
- The appliance must be switched off before starting the update and remain switched off until the update is complete.

25.8 Remote diagnostics

Customer Service can use Remote Diagnostics to access your appliance if you contact them, have your appliance connected to the Home Connect server and if Remote Diagnostics is available in the country in which you are using the appliance.

Tip: For further information and details about the availability of Remote Diagnostics in your country, please visit the service/support section of your local website: *www.home-connect.com*.

25.9 Data protection

Please see the information on data protection.

The first time your appliance is registered on a home network connected to the Internet, your appliance will transmit the following types of data to the Home Connect server (initial registration):

- Unique appliance identification (consisting of appliance codes as well as the MAC address of the installed Wi-Fi communication module).
- Security certificate of the Wi-Fi communication module (to ensure a secure data connection).
- The current software and hardware version of your appliance.
- Status of any previous resetting to factory settings.

This initial registration prepares the Home Connect functions for use and is only required when you want to use the Home Connect functions for the first time.

Note: Please note that the Home Connect functions can only be utilised with the Home Connect app. Information on data protection can be retrieved in the Home Connect app.

26 Cleaning and servicing

26.1 Hob surface

Preventing damage to the surface

Before you use the appliance for the first time, clean the surface with a soft cloth and a commercially available glass ceramic cleaner.

- Do not use the hob as a work surface or storage space.
- Prevent food from coming into contact with the hotplate since this may lead to permanent discolouration of the surface.
- To prevent stains and damage to the glass, immediately remove any residues of sugar, plastic, aluminium foil, or food that has been spilled. Use a glass scraper while the cooking zone is still hot.
- Immediately remove any coarse dirt, salt and sugar from the cooking surface to prevent scratches
- Do not use cookware with a rough base.
- Lift the cookware when moving it.
- Do not use a scraper that is in poor condition.

26.2 Cleaning products

You can obtain suitable cleaning products and glass scrapers from customer service, the online shop or a retailer.

ATTENTION
Unsuitable cleaning products may damage the surfaces of the appliance.
- Never use unsuitable cleaning products.
- Do not use cleaning products while the hob is still hot. This may cause marks on the surface.

Unsuitable cleaning products

- Undiluted detergent
- Detergent intended for dishwashers
- Abrasive cleaning products
- Aggressive cleaning products such as oven spray or stain remover
- Abrasive sponges
- High-pressure or steam jet cleaners
- Basic products such as degreasing agents

26.3 Cleaning the hob

Clean the hob after every use to prevent cooking residues from getting burnt on.

Requirement: The hob must be cold. Do not allow the hob to cool down if it has sugar stains, rice starch, plastic or aluminium foil on it.

1. Remove heavy soiling using a glass scraper.
2. Spray the entire surface with soapy water or commercially available detergent. Only use cleaning agents for glass ceramic cooktops if there is stubborn dirt. We recommend using a cleaning solution suitable for glass-ceramic hobs, e.g. Viss®/Cif® [1].
   - Apply the cleaning agent evenly and gently.
   - Follow the cleaning instructions on the packaging of the cleaning product.
   - You can achieve good cleaning results using a special sponge for glass ceramic.
3. Wipe it with a damp cloth and dry it with a microfibre cloth.

Tip: If you keep the base of the cookware clean, the hob surface remains in a good condition.

26.4 Cleaning Twist Pad®

The rotary knob consists of two parts, which you can easily remove for a more thorough clean.

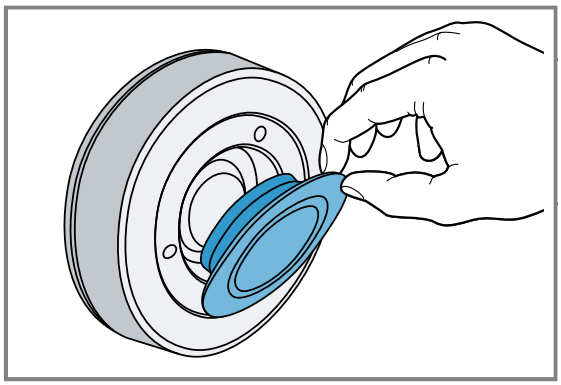

Recommended cleaning:
- Wipe the parts with warm soapy water and a cloth.
- Dry the parts thoroughly before reassembling.

Non-recommended cleaning:
- Do not use abrasive or corrosive products, such as citric acid, vinegar, aggressive cleaning agents or glass ceramic cleaners.
- Do not clean it in the dishwasher or immerse it in water, as this may damage it.
- Do not use the glass scraper.
- Do not use stainless steel care products.

26.5 Cleaning profiles

Clean the profiles if they are dirty or stained after use.

Note: Do not use a glass scraper.

1. Clean using warm soapy water and a soft cloth. Wash new sponge cloths thoroughly before use.
2. Dry with a soft cloth.

Note: If there are replaceable side profiles, wear protective gloves when removing them.

26.6 Grease filter

The grease filter filters the grease out of the kitchen steam. The filter comprises a container and two removable grease filters. How frequently you clean the module depends on the quantity and type of grease used when cooking. To keep them in good working order, you must clean the grease filters if there are visible grease deposits or at least once a month.

[1] Viss® and Cif® are registered trademarks of UNILEVER. BSH is an independent company and does not promote UNILEVER brands.

⚠ **WARNING – Risk of fire!**
Fatty deposits in the grease filters may catch fire.
- Never operate the appliance without a grease filter.
- Clean the grease filters regularly.
- Never work with naked flames close to the appliance (e.g. flambéing).

ATTENTION
Falling grease filters may damage the hob below.
- Grip below the grease filter with one hand.

1. Remove the grease filter.
   - Grease may accumulate in the bottom of the container. Keep the grease filter level to prevent grease from dripping out.

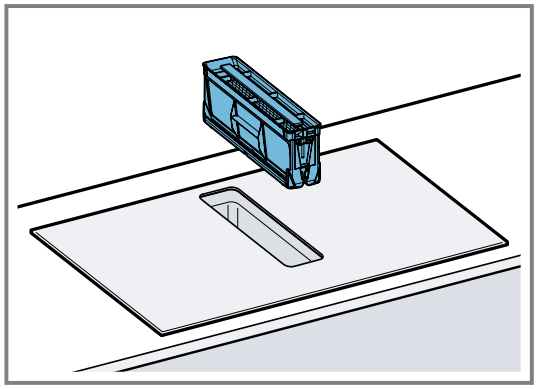

2. Remove the components of the grease filter.

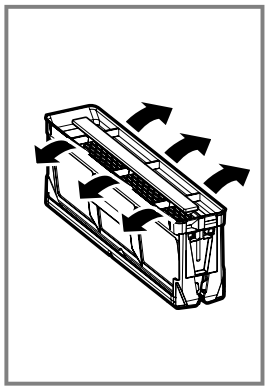

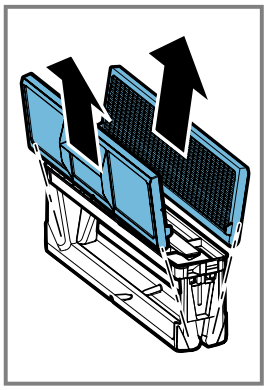

3. Clean the grease filter in the dishwasher or by hand.
   → *"Cleaning the grease filters manually", Page 22*
   → *"Cleaning the grease filter in the dishwasher", Page 22*
4. If required, remove the odour filters or acoustics filters and clean the appliance from the inside.
5. If any objects get into the appliance, remove these objects and ensure that the supply to the overflow container is not blocked.
6. Wipe out the inside of the appliance with soapy water and a dish cloth.
7. After cleaning, reinsert the dried grease filter.

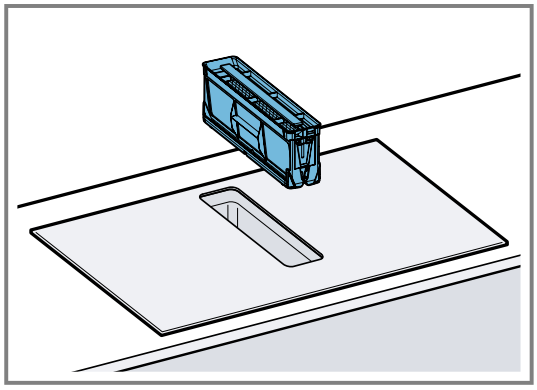

Cleaning the grease filters manually

1. Remove the components of the grease filter.
2. Soak the grease filter in hot soapy water.
   - Use a brush to clean the grease filter. Do not use aggressive, acidic or alkaline cleaning products.
   - Use special grease solvent for stubborn dirt. You can purchase the grease solvent from Customer Service, through our online shop or in a specialist shop.
3. Rinse the grease filters thoroughly.
4. Leave the grease filter to drain.
5. Fit the components of the grease filter.
6. After drying, insert the grease filter into the appliance.

Cleaning the grease filter in the dishwasher

1. Remove the grease filter.
2. Remove the components of the grease filter.
3. Place the components of the grease filter loosely in the dishwasher and do not jam them in.

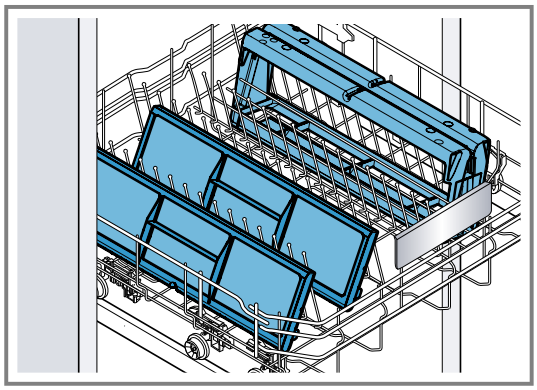

   Do not clean heavily soiled grease filters with tableware. Do not use aggressive, acidic or alkaline cleaning products.
4. Start the dishwasher. Select a maximum temperature setting of 70 °C.
5. Leave the grease filter to drain.
6. After drying, insert the grease filter into the appliance.

26.7 Odour filter or acoustics filter

You can obtain odour filters or acoustics filters from specialist retailers, customer service or in the online shop.

Notes

- Replace the odour filters when the warning is displayed on the appliance.
  → *"Resetting the saturation indicator", Page 23*
- Change the acoustics filters if they are dirty.

Requirement: To keep them in good working order, only use genuine replacement filters.

1. Remove the grease filter.
2. Remove the four odour filters or acoustics filters, and dispose of them properly.

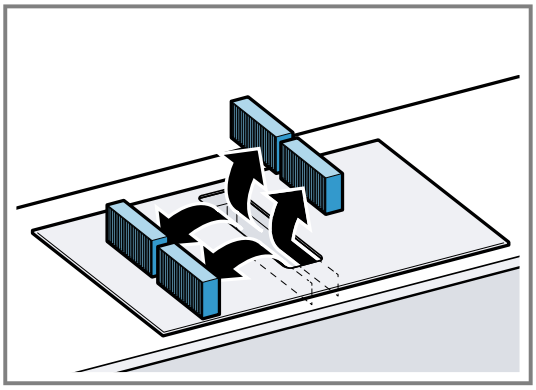

3. Insert two new odour filters or acoustics filters into the left and right of the appliance and slide them forwards.

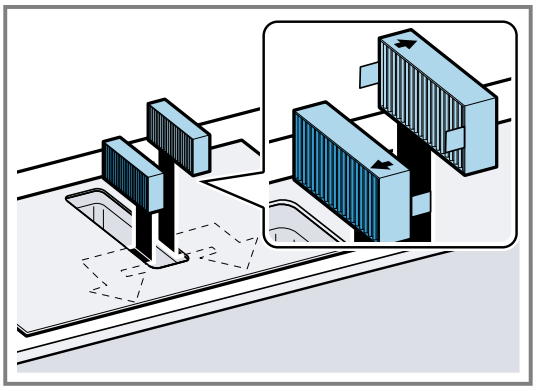

4. Insert the other odour filters or acoustics filters into the left and right of the appliance.

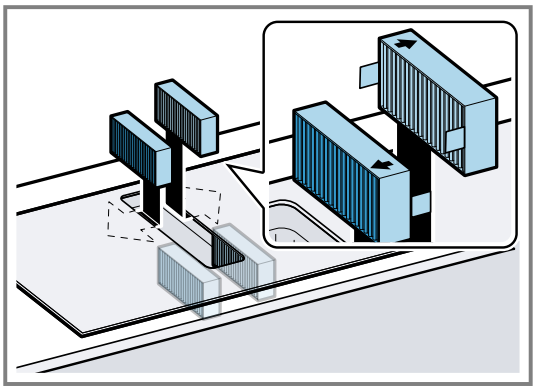

5. Insert the grease filter into the appliance.

Resetting the saturation indicator

After the appliance is switched off, F lights up.

1. Replace the odour filters.
   → *"Odour filter or acoustics filter", Page 22*
2. Press and hold ⁂ until a signal tone sounds.

✔ F stops lighting up. The odour filter display is reset.

26.8 Cleaning the overflow container

The overflow container collects liquids or objects that come into the appliance from above.

Requirement: The appliance has cooled and the residual heat indicator has gone out.

1. Hold the overflow container with one hand and unscrew it with the other hand.
   - Hold the overflow container level to prevent liquid from leaking out.

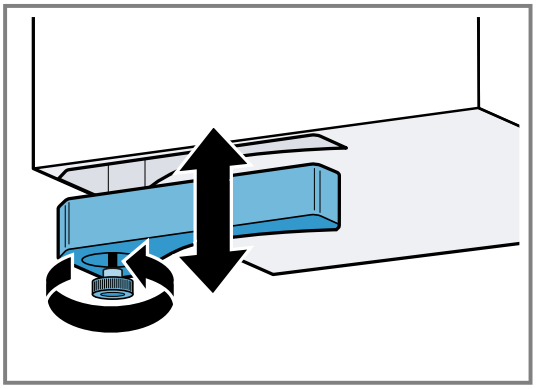

2. Empty the overflow container and rinse it out.
3. If required, unscrew the screw and clean the overflow container without the screw in the dishwasher.
4. Clean the overflow container before screwing it back into place.
5. Ensure that the supply to the overflow container is not blocked.
   Remove any objects that have entered the appliance once it has cooled down. To do this, remove the grease filter.

27 Troubleshooting

You can rectify minor faults on your appliance yourself. Read the troubleshooting information before contacting aftersales service. This will avoid unnecessary costs.

Tip: Permanently connect your appliance to the Home Connect app to automatically receive software updates. This allows errors to be eliminated, performance to be improved and new functions to be made available.

⚠ **WARNING – Risk of injury!**
Improper repairs are dangerous.
- ▸ Repairs to the appliance should only be carried out by trained specialist staff.
- ▸ If the appliance is defective, call Customer Service.
  → *"Customer Service", Page 25*

⚠ **WARNING – Risk of electric shock!**
Improper repairs are dangerous.
- ▸ Repairs to the appliance should only be carried out by trained specialist staff.
- ▸ Only use genuine spare parts when repairing the appliance.
- ▸ If the power cord or the appliance power cable of this appliance is damaged, it must be replaced with a special power cord or special appliance power cable, which is available from the manufacturer or its Customer Service.
- ▸ If the power cord of this appliance is damaged, it must be replaced by trained specialist staff.

27.1 Warnings

Notes
- If E or F appears on the displays, press and hold the rotary switch next to the mark for the relevant cooking zone in order to read the fault code.
- If the fault code is not listed in the following table, disconnect the hob from the power supply and wait 30 seconds before reconnecting it. If this display appears again, contact Customer Service and specify the exact fault code.
- If an error occurs, the appliance does not switch to low power mode.
- In order to protect the appliance's electronic parts from overheating or surge currents, the hob may temporarily reduce the power level.

27.2 Information on the display panel

Fault	Cause and troubleshooting
No displays light up.	The power supply has been disconnected. ▸ Use other electrical appliances to check whether there has been a power failure.
	The appliance has not been connected as shown in the circuit diagram. ▸ Connect the appliance in accordance with the circuit diagram.
	Electronics fault ▸ If you are unable to rectify the fault, inform the technical after-sales service.
The displays flash.	The control panel is wet or an object is covering it. ▸ Dry the control panel or remove the object.
Ventilation system not working	The appliance has not been connected as shown in the circuit diagram. ▸ Connect the appliance in accordance with the circuit diagram.
F	The odour filter is saturated or the saturation indicator lights up even though the filter has been replaced. ▸ Change the filter and reset the filter saturation indicator. You can find additional information about this in the section entitled . → *"Cleaning and servicing", Page 21*
F2, F 4, E 7015, E 8207, E 8208	The electronics have overheated and one or all of the cooking zones have been switched off. ▸ Wait until the electronics have cooled down sufficiently. Then touch any button on the control panel.
F5 + power level and audible signal	There is hot cookware in the vicinity of the control panel. This may cause the electronics to overheat. ▸ Remove the cookware. The fault display goes out shortly afterwards. You can continue to cook.
F5 and signal tone	There is hot cookware in the vicinity of the control panel. The cooking zone has been switched off to protect the electronics. ▸ Remove the cookware. Wait a few seconds. Touch any button. When the fault display goes out, you can continue cooking.
F1/F6	The cooking zone has overheated and has been switched off to protect the work surface. ▸ Wait until the electronics have cooled down sufficiently before switching the cooking zone back on.

Fault	Cause and troubleshooting
F0	PowerTransfer is not activated. ▸ Touch any button to confirm the fault display. You can continue to cook as normal without using the PowerTransfer function. Contact customer service.
F8	The cooking zone has been operating continuously for an extended period. ▸ Individual safety switch-off is switched on. Touch any button to switch off the display so that you can set the cooking zone.
E 9000/E9010	The operating voltage is incorrect and outside of the normal operating range. ▸ Contact your energy supplier.
U400/E9011	The hob is not connected correctly. ▸ Disconnect the hob from the mains. Connect the hob in accordance with the circuit diagram.
d E	Demo mode is activated. ▸ Switch off demo mode in the basic settings.
Home Connect is not working properly.	Different causes are possible. ▸ Go to *www.home-connect.com*.
Animations on the 000 displays	In certain circumstances, the hob can perform self-maintenance tasks, e.g. a firmware update, optimisation or troubleshooting. ▸ Wait until the process is complete and only then switch the hob on.

27.3 Normal noises from your appliance

An induction hob may sometimes cause noises or vibrations, such as buzzing, crackling, hissing noises, fan noises or rhythmic noises.

28 Disposal

28.1 Disposing of old appliance

Valuable raw materials can be reused by recycling.

1. Unplug the appliance from the mains.
2. Cut through the power cord.
3. Dispose of the appliance in an environmentally friendly manner.
   Information about current disposal methods are available from your specialist dealer or local authority.

This appliance is labelled in accordance with European Directive 2012/19/EU concerning used electrical and electronic appliances (waste electrical and electronic equipment - WEEE).
The guideline determines the framework for the return and recycling of used appliances as applicable throughout the EU.

29 Customer Service

Function-relevant genuine spare parts according to the corresponding Ecodesign Directive can be obtained from Customer Service for a period of at least 10 years from the date on which your appliance was placed on the market within the European Economic Area. Furthermore, our Customer Service will continue to provide you with other function-relevant and storable genuine spare parts for up to 15 years from the date on which your appliance was placed on the market.
For more information, please contact our Customer Service team.

Note: Under the terms of the manufacturer's warranty the use of Customer Service is free of charge.

Detailed information about the warranty period and the warranty conditions in your country is available via the QR code on the enclosed document on service contacts and warranty conditions, from our customer service or on our website.

You can find the contact details for our customer service via the QR code on the enclosed document on service contacts and warranty conditions or on our website. You can find the information required as per Regulations (EU) 65/2014, (EU) 66/2014 and (EU) 2023/826 online at *www.neff-home.com* on the product and service pages for your appliance, in the area of user manuals and additional documents.

29.1 Product number (E-Nr.), production number (FD) and consecutive numbering (Z-Nr.)

If you contact Customer Service, you will require the product number (E-Nr.), the production number (FD) and the consecutive numbering (Z-Nr.), which you can find on the appliance's rating plate.

The rating plate can be found:
- On the appliance certificate.

- On the underside of the hob, towards the front.

The product number (E no.) can also be found on the glass ceramic. You can also display the customer service index (KI) and the production number (FD) in the basic settings. →*Page 17*

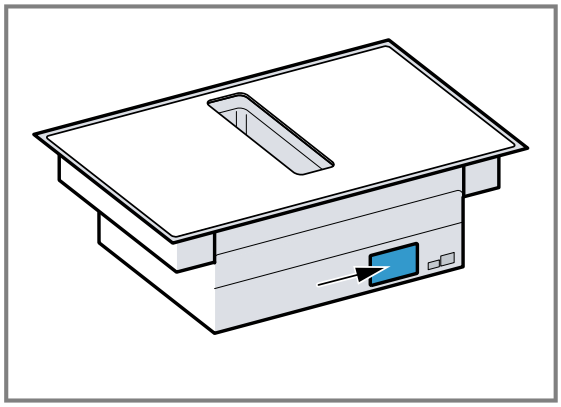

Make a note of your appliance's details and the Customer Service telephone number to find them again quickly.

30 Information regarding Free and Open Source Software

This product includes software components that are licensed by the copyright holders as free software or open source software.
The applicable licence information is stored on your home appliance. You can also access the applicable licence information via your Home Connect app: "Profile -> Legal information -> Licence Information".[1] You can also download the licence information on the brand product website. (Please search on the product website for your appliance model and additional documents). Alternatively, you can request the relevant information from ossrequest@bshg.com or BSH Hausgeräte GmbH, Carl-Wery-Str. 34, 81739 Munich, Germany.
The relevant source code will be made available on request.
Please send your request to ossrequest@bshg.com or BSH Hausgeräte GmbH, Carl-Wery-Str.34, 81739 Munich, Germany.
Subject: „OSSREQUEST“
The cost of performing your request will be charged to you. This offer is valid for three years from the date of purchase or at least as long as we offer support and spare parts for the relevant appliance.

31 Declaration of Conformity

BSH Hausgeräte GmbH hereby declares that the appliance with Home Connect functionality conforms to the essential requirements and other relevant provisions of Directive 2014/53/EU.
A detailed RED Declaration of Conformity can be found online at *www.neff-home.com* among the additional documents on the product page for your appliance.

Hereby, BSH Hausgeräte GmbH declares that the appliance with Home Connect functionality is in compliance with relevant statutory requirements.[2]
A detailed Declaration of Conformity can be found online at *www.neff-home.com/uk* among the additional documents on the product page for your appliance.[2]

2.4 GHz band (2400–2483.5 MHz): Max. 100 mW
5-GHz band (5150–5350 MHz + 5470–5725 MHz): max. 130 mW

	BE	BG	CZ	DK	DE	EE	IE	EL	ES
	FR	HR	IT	CY	LI	LV	LT	LU	HU

[1] Depending on the appliance specifications
[2] Only applies to Great Britain

MT	NL	AT	PL	PT	RO	SI	SK	FI
SE	NO	CH	TR	IS	UK (NI)			
5 GHz WLAN (Wi-Fi): For indoor use only.								

AL	BA	MD	ME	MK	RS	UK	UA
5 GHz WLAN (Wi-Fi): For indoor use only.							

31.1 Statement of Compliance for Great Britain

Product type
This statement of compliance covers the products described in this information for use whose model identifier group is seen on the title page. The full model identifier is made up of the characters before the slash in the product number (E no.) which can be found on the rating plate. Alternatively, you can also find the model identifier in the first line of the UK Energy Label.

Name and address of manufacturer
BSH Hausgeräte GmbH, Carl-Wery-Strasse 34, 81739 München, Germany

This statement of compliance is prepared by the manufacturer.

The manufacturer, BSH Hausgeräte GmbH deems that it has complied with
- provision 5.1-1 of ETSI EN 303 645 v3.1.3 and, where relevant, provision 5.1-2 of ETSI EN 303 645 v3.1.3;
- provision 5.2-1 of ETSI EN 303 645 v3.1.3;
- provision 5.3-13 of ETSI EN 303 645 v3.1.3.

Support period
BSH Hausgeräte GmbH will provide security updates that are necessary to maintain the main functions free of charge until at least 28/02/2036.

32 Test dishes

These recommended settings are intended for test institutes to facilitate the testing of our appliances. The tests were carried out using our cookware sets for induction hobs. If required, these accessory sets can be purchased at a later point from specialist retailers, or through our technical after-sales service or our online shop.

32.1 Melting the chocolate coating

Ingredients: 150 g dark chocolate (55% cocoa).
- 16 cm saucepan without lid
  - Boiling: Power level 1.5

32.2 Heating and keeping lentil stew warm

Recipe in accordance with DIN 44550
Initial temperature 20 °C
Heating up without stirring
- 16 cm saucepan with lid, amount: 450 g
  - Heating up: Duration 1 min. 30 sec., power level 9
  - Simmering: Power level 1.5
- 20 cm saucepan with lid, amount: 800 g
  - Heating up: Duration 2 min. 30 sec., power level 9
  - Simmering: Power level 1.5

32.3 Heating and keeping lentil stew warm

E.g.: Lentil diameter 5–7 mm. Initial temperature 20 °C
Stir after heating for 1 minute
- 16 cm saucepan with lid, amount: 500 g
  - Heating up: Duration approx. 1 min. 30 sec., power level 9
  - Simmering: Power level 1.5
- 20 cm saucepan with lid, amount: 1 kg
  - Heating up: Duration approx. 2 min. 30 sec., power level 9
  - Simmering: Power level 1.5

32.4 Béchamel sauce

Milk temperature: 7 °C
- 16 cm saucepan without lid, ingredients: 40 g butter, 40 g flour, 0.5 l milk with 3.5% fat content and a pinch of salt

Preparing Béchamel sauce

1. Melt the butter, stir in the flour and salt, and heat up the mixture.
   ▸ Heating up: Duration 6 min., power level 2
2. Add the milk to the roux and bring to the boil, stirring continuously.
   ▸ Heating up: Duration 6 min. 30 sec., power level 7
3. Once the Béchamel sauce comes to the boil, leave it on the cooking zone for a further two minutes.
   ▸ Simmering: Power level 2

32.5 Cooking rice pudding with the lid on

Milk temperature: 7 °C
1. Heat the milk until it starts to rise up. Heat up without a lid. Stir after heating for 10 min.
2. Set the recommended power level and add rice, sugar and salt to the milk.
The cooking time, including heating up, is approx. 45 minutes.
- 16 cm saucepan, ingredients: 190 g short-grain rice, 90 g sugar, 750 ml milk with 3.5% fat content and 1 g salt
  - Heating up: Duration approx. 5 min. 30 sec., power level 8.5
  - Simmering: Power level 3
- 20 cm saucepan, ingredients: 250 g short-grain rice, 120 g sugar, 1 l milk with 3.5% fat content and 1.5 g salt
  - Heating up: Duration approx. 5 min. 30 sec., power level 8.5

- Simmering: Power level 3, stir after 10 minutes

32.6 Cooking rice pudding without a lid

Milk temperature: 7 °C
1. Add the ingredients to the milk and heat the mixture up while stirring continuously.
2. Once the milk has reached approx. 90 °C, select the recommended power level and leave it to simmer on a low heat for approx. 50 minutes.

- 16 cm saucepan without lid, ingredients: 190 g short-grain rice, 90 g sugar, 750 ml milk with 3.5% fat content and 1 g salt
  - Heating up: Duration approx. 5 min. 30 sec., power level 8.5
  - Simmering: Power level 3
- 20 cm saucepan without lid, ingredients: 250 g short-grain rice, 120 g sugar, 1 l milk with 3.5% fat content and 1.5 g salt
  - Heating up: Duration approx. 5 min. 30 sec., power level 8.5
  - Simmering: Power level 2.5

32.7 Cooking rice

Recipe in accordance with DIN 44550
Water temperature: 20 °C

- 16 cm saucepan with lid, ingredients: 125 g long-grain rice, 300 g water and a pinch of salt
  - Heating up: Duration approx. 2 min. 30 sec., power level 9
  - Simmering: Power level 2
- 20 cm saucepan with lid, ingredients: 250g long-grain rice, 600 g water and a pinch of salt
  - Heating up: Duration approx. 2 min. 30 sec., power level 9
  - Simmering: Power level 2.5

32.8 Roasting a pork loin

Initial temperature of the loin: 7 °C

- 24 cm pan without lid, ingredients: 3 pork loins, total weight approx. 300 g, 1 cm thick, and 15 g sunflower oil
  - Heating up: Duration approx. 1 min. 30 sec., power level 9
  - Simmering: Power level 7

32.9 Preparing crêpes

Recipe in accordance with DIN EN 60350-2

- 24 cm pan without lid, ingredients: 55 ml batter per crêpe
  - Heating up: Duration 1 min. 30 sec., power level 9
  - Simmering: Power level 7

32.10 Deep-fat frying frozen chips

- Pot dia. 20 cm without lid: ingredients: 2 l sunflower oil. For each frying time: 200 g frozen chips, 1 cm thick.
  - Heating up: Power level 9, until the oil temperature reaches 180 °C.
  - Simmering: Power level 9

Neff Home Connect App

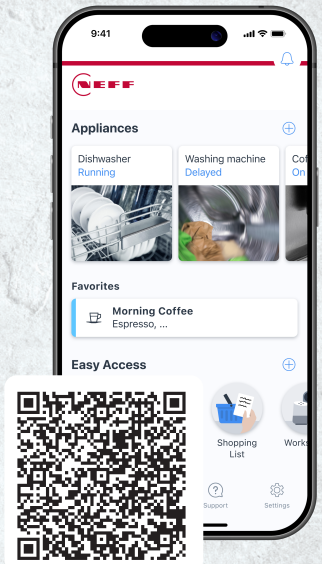

Connect your home appliance today and enjoy the following benefits:

- **Is the hob switched off? Check your hob from anywhere using the app.**
- **Choose from our great range of recipes. If a frying sensor is available, you can send the corresponding settings to your appliance.**
- **Do not forget to maintain the filters. When it's time, you will receive an app notification.**

Valid within Great Britain:
Imported to Great Britain by
BSH Home Appliances Ltd.
Grand Union House
Old Wolverton Road
Wolverton, Milton Keynes
MK12 5PT
United Kingdom

Register your product online
neff-home.com

BSH Hausgeräte GmbH
Carl-Wery-Straße 34
81739 München, GERMANY

9001996605 (060629) REG25
en