Combi steam oven

GS240100 GS241100 GS240130 GS241130





GAGGENAU

**You can find additional information and explanations online.
Scan the QR code on the title page.**



Table of contents

INFORMATION FOR USE

1 Safety 2
2 Preventing material damage 5
3 Environmental protection and saving energy 6
4 Familiarising yourself with your appliance 7
5 Functions in the Home Connect app 14
6 Accessories 15
7 Before using for the first time 16
8 Basic operation 17
9 Timer functions 20
10 Long-term timer 22
11 Childproof lock 23
12 Favourites 24
13 Programmes 24
14 Core temperature probe 27
15 Home Connect 30
16 Basic settings 32
17 Cleaning and servicing 37
18 Troubleshooting 42
19 Disposal 45
20 How it works 45
21 Information regarding Free and Open Source Software 48
22 Customer Service 49
23 Declaration of Conformity 49

24 INSTALLATION INSTRUCTIONS 50
24.1 General installation instructions 50

⚠ 1 Safety

Observe the following safety instructions.

1.1 Definition of the signal words

This is where you can find explanations for the safety signal words used in this manual.

⚠ WARNING
This indicates that death or serious injuries may occur as a result of non-observance of this warning.

ATTENTION
This indicates that damage to the appliance or other material damage may occur as a result of non-compliance with this warning.

Note: This alerts you to important information.

1.2 General information

- Read this instruction manual carefully.
- Keep the instruction manual and the product information safe for future reference or for the next owner.
- Do not connect the appliance if it has been damaged in transit.

1.3 Intended use

This appliance is designed only to be built into kitchen units. Read the special installation instructions.
Only a licensed professional may connect appliances without plugs. Damage caused by incorrect connection is not covered under the warranty.

Only use this appliance:
- To prepare meals and drinks.
- in private households and in enclosed spaces in a domestic environment.
- Up to an altitude of 4000 m above sea level.

1.4 Restriction on user group

This appliance may be used by children aged 8 or over and by people who have reduced physical, sensory or mental abilities or inadequate experience and/or knowledge, provided that they are supervised or have been instructed on how to use the appliance safely and have understood the resulting dangers.
Do not let children play with the appliance.

Children must not perform cleaning or user maintenance unless they are at least 15 years old and are being supervised.
Keep children under the age of 8 years away from the appliance and power cable.

1.5 Safe use

Always place accessories in the cooking compartment the right way round.
→ *"Accessories", Page 15*

⚠ WARNING – Risk of fire!
Combustible objects that are left in the cooking compartment may catch fire.
- ▸ Never store combustible objects in the cooking compartment.
- ▸ If smoke is emitted, the appliance must be switched off or the plug must be pulled out and the door must be held closed in order to stifle any flames.

Loose food remnants, fat and meat juices may catch fire.
- ▸ Remove coarse dirt from the cooking compartment and from the accessories.

Opening the appliance door creates a draught. Greaseproof paper may come into contact with the heating element and catch fire.
- ▸ Never place greaseproof paper loosely over accessories when preheating the appliance and while cooking.
- ▸ Always cut greaseproof paper to size and use a plate or baking tin to hold it down.

⚠ WARNING – Risk of burns!
The appliance and its parts that can be touched become hot during use.
- ▸ Caution should be exercised here in order to avoid touching the cooking compartment.
- ▸ Young children under 8 years of age must be kept away from the appliance.

Accessories and cookware get very hot.
- ▸ Always use oven gloves to remove accessories or cookware from the cooking compartment.

The inside of the appliance door becomes very hot during operation.
- ▸ During or after operation of the appliance, only touch the appliance door at the surface intended for this on the side.
- ▸ Always open the appliance door as far as it will go.

When the cooking compartment is hot, any alcoholic vapours inside may catch fire. The appliance door may spring open. Hot steam and jets of flame may escape.
- ▸ Only use small quantities of drinks with a high alcohol content in food.
- ▸ Do not heat spirits (≥ 15% vol.) when undiluted (e.g. for marinating or pouring over food).
- ▸ Open the appliance door carefully.

The telescopic shelves become hot when the appliance is in use.
- ▸ Allow hot telescopic shelves to cool down before touching them.
- ▸ Only touch hot telescopic shelves with oven gloves.

⚠ WARNING – Risk of scalding!
Hot steam may escape when you open the appliance door. Steam may not be visible, depending on the temperature.
- ▸ Open the appliance door carefully.
- ▸ Keep children at a safe distance.

If there is water in the cooking compartment when it is hot, this may create hot steam.
- ▸ Never pour water into the cooking compartment when the cooking compartment is hot.

⚠ WARNING – Risk of injury!
Scratched glass in the appliance door may develop into a crack.
- ▸ Do not use any harsh or abrasive cleaners or sharp metal scrapers to clean the glass on the oven door, as they may scratch the surface.

The appliance and its parts that can be touched may have sharp edges.
- ▸ Take care when handling and cleaning them.
- ▸ If possible, wear protective gloves.

The hinges on the appliance door move when the door is opened and closed, which could trap your fingers.
- ▸ Keep your hands away from the hinges.

The light emitted by LED lights is very dazzling, and can damage the eyes (risk group 1).
- ▸ Do not look directly into the switched on LED lights for longer than 100 seconds.

⚠ WARNING – Risk of electric shock!
Improper repairs are dangerous.
- ▸ Repairs to the appliance should only be carried out by trained specialist staff.
- ▸ Only use genuine spare parts when repairing the appliance.
- ▸ If the power cord or the appliance power cable of this appliance is damaged, it must be replaced with a special power cord or special appliance power cable, which is

available from the manufacturer or its Customer Service.
- If the power cord of this appliance is damaged, it must be replaced by trained specialist staff.

If the insulation of the power cord is damaged, this is dangerous.
- Never let the power cord come into contact with hot appliance parts or heat sources.
- Never let the power cord come into contact with sharp points or edges.
- Never kink, crush or modify the power cord.

An ingress of moisture can cause an electric shock.
- Do not use steam- or high-pressure cleaners to clean the appliance.

If the appliance or the power cord is damaged, this is dangerous.
- Never operate a damaged appliance.
- If the glass of the lighting is damaged, switch off the appliance to avoid a possible electric shock.
- Never pull on the power cord to unplug the appliance. Always unplug the appliance at the mains.
- If the appliance or the power cord is damaged, immediately unplug the power cord or switch off the fuse in the fuse box.
- Call customer service. →*Page 49*

⚠ WARNING – Risk of suffocation!

Children may put packaging material over their heads or wrap themselves up in it and suffocate.
- Keep packaging material away from children.
- Do not allow children to play with packaging material.

Children may breathe in or swallow small parts, causing them to suffocate.
- Keep small parts away from children.
- Do not let children play with small parts.

1.6 Steam

Follow these instructions when using a steam function.

⚠ WARNING – Risk of scalding!

The water in the water tank may become very hot if you operate the appliance for long periods.
- Always empty the water tank after using the steam function.

Hot steam is generated in the cooking compartment.
- Do not reach into the cooking compartment when using steam.

Hot liquid may spill over the sides of the accessory when it is removed from the cooking compartment.
- Remove hot accessories with care and always wear oven gloves.

⚠ WARNING – Risk of fire!

Due to the hot surfaces, vapours from flammable liquids may catch fire in the cooking compartment (explosion). The appliance door may spring open. Hot steam and jets of flame may escape.
- Do not pour flammable liquids (e.g. alcoholic drinks) into the water tank.
- Only fill the water tank with water or with the descaling solution we have recommended.

⚠ WARNING – Risk of burns!

Hot steam may escape during operation.
- Do not touch the ventilation openings.
- Keep children away from the appliance.

1.7 Core temperature probe

Follow these safety instructions when using the core temperature probe.

⚠ WARNING – Risk of electric shock!

An incorrect core temperature probe may damage the insulation.
- Only use the core temperature probe that is suitable for this appliance.

⚠ WARNING – Risk of injury!

The core temperature probe is sharp.
- Handle the core temperature probe with care.

1.8 Cleaning

Follow these safety instructions when cleaning the appliance.

⚠ WARNING – Risk of scalding!

The descaling tablets may cause chemical burns in the mouth, throat, eyes and on the skin.
- Follow the safety instructions on the packaging of the descaling tablets.
- Avoid the skin coming into contact with the descaling tablets.
- Keep children away from the descaling tablets.

⚠ **WARNING – Risk of chemical burns!**
The descaling solution may cause chemical burns in the mouth, throat and eyes or on the skin.
- ▸ Avoid the skin coming into contact with the descaling solution.
- ▸ Keep children away from the descaling solution.
- ▸ Do not drink the descaling solution.
- ▸ The descaling solution must not come into contact with food.
- ▸ Clean the water tank in the dishwasher or thoroughly by hand before you next use the appliance.

2 Preventing material damage

2.1 General

ATTENTION
A build-up of heat may damage the appliance.
- ▸ Do not place anything directly on the cooking compartment floor.
- ▸ Do not line the cooking compartment floor with aluminium foil.
- ▸ Always place cookware in a perforated cooking container or on a wire rack.

Using unsuitable liquids may damage the appliance.
- ▸ Do not use any liquids other than water.
- ▸ Only use cold, fresh tap water, softened water or non-carbonated mineral water.

Chloride and acids may damage the stainless steel surface.
- ▸ Remove any residues of salt, hot sauces, e.g. ketchup or mustard, salted food, e.g. salted roasts, or other foods containing chloride or acid immediately.

If aluminium foil comes into contact with the door pane, it could cause permanent discolouration.
- ▸ Do not allow aluminium foil in the cooking compartment to come into contact with the door pane.

Fruit juice can cause permanent stains in the cooking compartment.
- ▸ Always remove fruit juice immediately.
- ▸ Wipe with a damp cloth, followed by a dry cloth.

The prolonged presence of moisture in the cooking compartment leads to corrosion.
- ▸ Do not keep moist food in the cooking compartment for a long time with the door closed.
- ▸ Do not store food in the cooking compartment.

Rusting material may lead to corrosion in the cooking compartment.
- ▸ Only use original accessories in the cooking compartment.
- ▸ Do not use any enamelled baking trays or grill trays.
- ▸ Never use serving plates or cutlery that may rust.

Small parts that are not original may damage the appliance.
- ▸ Only use original small parts, e.g. knurled nuts.
- ▸ If necessary, order small parts from our spare parts service.

Heat can damage stainless steel cooking containers.
- ▸ Only heat stainless steel cooking containers up to 230 °C.
- ▸ Do not use stainless steel cooking containers in the oven.

Leaving the appliance to cool down with the door open will damage the front of neighbouring kitchen units over time.
- ▸ Always allow the cooking compartment to cool down with the door closed after cooking at high temperatures.
- ▸ Take care not to trap anything in the appliance door.
- ▸ Only leave the cooking compartment to dry with the door open if a lot of moisture was produced during operation.

If the seal is very dirty, the appliance door will no longer close properly during operation. This may damage the front of adjacent kitchen units.
- ▸ Keep the seal clean at all times.
- ▸ Never operate the appliance if the seal is damaged or missing.

Sitting or placing objects on the appliance door may damage it.
- ▸ Do not place, hang or support objects on the appliance door.
- ▸ Do not place cookware or accessories on the appliance door.

Carrying the appliance by the appliance frame may cause it to bend. The appliance frame cannot support the weight of the appliance.

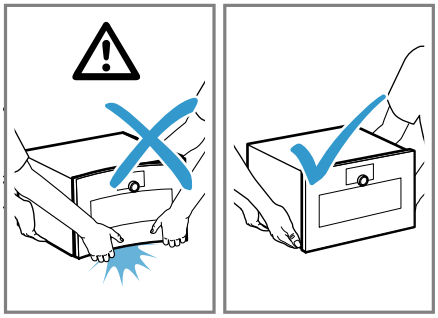

- ▸ Do not lift the appliance using the appliance frame.
- ▸ Always lift the appliance at the casing.

2.2 Steam

ATTENTION
Dripping liquids may damage the cooking compartment.
- ▸ To catch any dripping liquids, when steaming using a perforated cooking container, always insert the unperforated cooking container underneath.

Silicone bakeware is not suitable for combined operation with steam.
- ▸ Cookware must be heat- and steam-resistant.

Using cookware with rust spots may cause corrosion in the cooking compartment. Even the smallest spots of rust can cause corrosion.
- ▸ Do not use cookware with rust spots.

Hot water in the water tank may damage the steam system.
- ▸ Only fill the water tank with cold water.

If descaling solution comes into contact with the control panel or other delicate surfaces, it will damage them.
- ▸ Remove descaling solution immediately with water.

2.3 Core temperature probe

⚠ **WARNING – Risk of electric shock!**

An incorrect core temperature probe may damage the insulation.
- ▸ Only use the core temperature probe that is suitable for this appliance.

ATTENTION

Temperatures above 250 °C damage the core temperature probe.
- ▸ Only use the core temperature probe in your appliance at a maximum temperature of 230 °C.
- ▸ When using the "Grill + circulated air", "Grill level 1 + humidity" and "Grill level 2 + humidity" types of heating with the core temperature probe, do not put the food into the top shelf level.

You may damage the cable of the core temperature probe with the appliance door.
- ▸ Do not trap the cable of the core temperature probe in the appliance door.

The heat of the grilling surface may damage the core temperature probe.
- ▸ Ensure that the distance between the glass grilling surface and the core temperature probe and the cable of the core temperature probe is a few centimetres. In doing so, ensure that the meat can expand during the cooking process.

Aggressive cleaning agents may damage the core temperature probe.
- ▸ Do not clean the core temperature probe in the dishwasher.

2.4 Cleaning

ATTENTION

Limescale may damage the appliance.
- ▸ Descale the appliance regularly.

Using the wrong descaler may damage the appliance.
- ▸ Only use the specified descaling tablets.

Improper care of the appliance can lead to corrosion in the cooking compartment.
- ▸ Follow the care and cleaning instructions for the appliance.
  → *"Cleaning and servicing", Page 37*
- ▸ Clean the cooking compartment each time you use it as soon as the appliance has cooled down.
- ▸ After cleaning the cooking compartment, use the Rapid drying →*Page 40* to dry it.

The descaling tablet may damage the cooking compartment.
- ▸ Use the descaling tablet for the descaling programme only.
- ▸ Place the descaling tablet into the water tank.
- ▸ Never place the descaling tablet in the cooking compartment or heat it up in the cooking compartment.

Heat damages the water tank.
- ▸ Do not dry the water tank in the hot cooking compartment.

3 Environmental protection and saving energy

3.1 Disposing of packaging

The packaging materials are environmentally compatible and can be recycled.
- ▸ Sort the individual components by type and dispose of them separately.

3.2 Saving energy

If you follow these instructions, your appliance will use less power.

When steaming, you can cook on several levels at the same time.
- ✔ With steam, various dishes can be prepared at the same time without the different flavours mixing. When preparing dishes with different cooking times, those with the longest cooking time should be placed in the oven first.

When cooking multiple dishes, do so in succession or in parallel.
- ✔ The cooking compartment is heated after cooking the first dish. This reduces the cooking time for the following dishes.

Use dark-coloured or black-coated baking tins.
- ✔ These types of baking tin absorb the heat particularly well.

Open the appliance door as little as possible during operation.
- ✔ This maintains the temperature in the cooking compartment and eliminates the need for the appliance to reheat.

Remove any accessories that are not being used from the cooking compartment.
- ✔ Accessories that are not being used do not need to be heated.

Allow frozen food to defrost before cooking.
- ✔ This saves the energy that would otherwise be required to defrost it.

4 Familiarising yourself with your appliance

4.1 Appliance

You can find an overview of the parts of your appliance here.

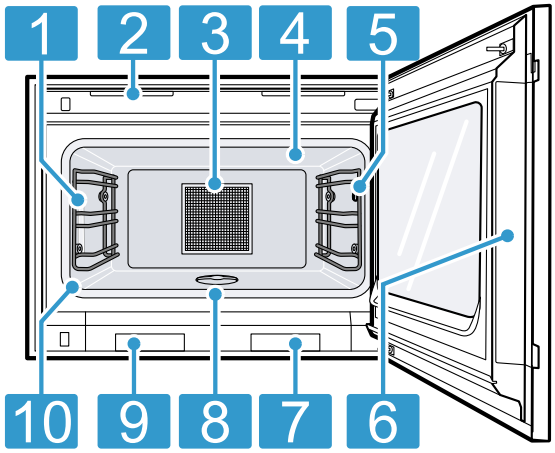

1	Interior lighting
2	Ventilation slots
3	Grease filter
4	Grilling surface
5	Connection socket for core temperature probe →*Page 27*
6	Intended surface for opening the door
7	Fresh-water tank
8	Drain filter
9	Waste-water tank
10	Door seal

4.2 Cooking compartment

The cooking compartment has three shelf levels. Count the shelf levels from the bottom up.

ATTENTION
A build-up of heat may damage the appliance.
- Ensure that the cooking compartment floor always remains clear.
- Do not place anything directly on the cooking compartment floor.
- Do not line the cooking compartment floor with aluminium foil.
- Always place cookware in the perforated cooking container or on the wire rack.

The accessories may tip.
- Do not push the accessories between the shelf positions.

When steaming, defrosting, dough proving and reheating, you can use up to three shelf levels at a time. You can only bake on one level. Use level 2 for baking or, for taller baking tins, use level 1. For very small baked goods, you can also use two levels, e.g. level 1 and level 3.

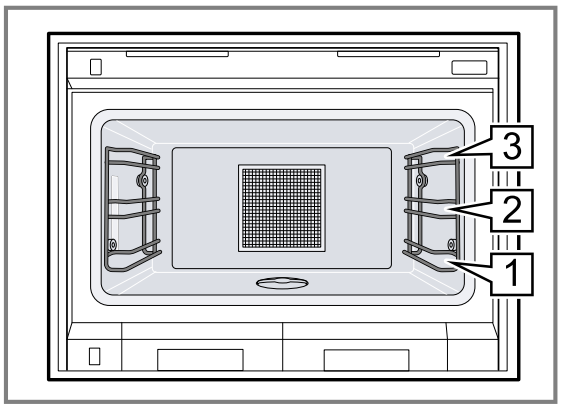

4.3 Interior lighting

When you open the appliance door, the interior lighting switches on. If the appliance door remains open for longer than 3 minutes, the appliances switches the interior lighting off.

⚠ **WARNING – Risk of injury!**
The light emitted by LED lights is very dazzling, and can damage the eyes (risk group 1).
- Do not look directly into the switched on LED lights for longer than 100 seconds.

You can also switch on the interior lighting when the appliance is in low power mode.
After approx. 20 minutes, the appliance switches the interior lighting off.
When you switch on the appliance, the appliance switches the interior lighting on.
→ *"Switching the interior lighting on or off", Page 19*
In most operating modes, the appliance keeps the interior lighting switched on.
You can specify whether the appliance will switch the interior lighting on during operation in the basic settings →*Page 32*. If you select the "Manual" setting in the basic settings, the appliance does not switch on the interior lighting automatically but you can switch on the interior lighting when required. After approx. 20 seconds, the appliance switches the interior lighting off.

4.4 Grease filter

The grease filter prevents the components of the appliance becoming soiled with grease.
Leave the grease filter in the cooking compartment for all applications.
Clean the grease filter with hot soapy water or in the dishwasher every time heavy dirt deposits have been left behind after cooking.

4.5 Fresh-water and waste-water tank

Your appliance is equipped with a fresh-water tank and a waste-water tank.
If you open the appliance door, you can see the waste-water tank on the left and the fresh-water tank on the

right. Always fill the fresh-water tank before operating the appliance with a type of heating with steam.
→ *"Fill the water tank", Page 17*
To cook without steam, leave the empty water tank in the tank slot in the appliance.
The fresh-water tank has a capacity of approx. 1.7 litres.
After using the appliance with a steam function, allow it to cool down.
Empty, clean and dry the fresh-water tank and waste-water tank.
The appliance, tank and tank lid bear symbols for fresh water and waste water.
Ensure that you place the correct tank lid on the corresponding tank. The colours on the tank lid are easy to distinguish. The symbols on the tank lids show which tanks the tank lids belong to. The symbol for waste water is on the left-hand side of the tank lid. The symbol for fresh water is on the right-hand side of the tank lid.
If you slide either of the tanks into the wrong opening, you will not be able to push it in all the way.
Different symbols show the water tank's fill level or whether there is no water tank in the appliance.

4.6 Control elements

You can use the control panel to configure all functions of your appliance and to obtain information about the operating status.
On certain models, specific details may differ from those pictured.

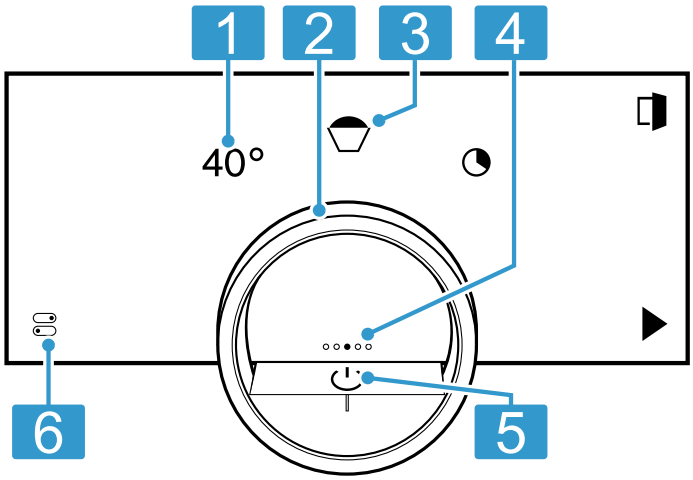

1	Symbols	Show settings and start or end functions.
2	Control ring	Use the control ring to change the selection.
3	12 o'clock position	The 12 o'clock position shows the value that is currently selected for a function, which you can change using the control ring. If required, press on another function, e.g. on the temperature or cooking time, to position this at the 12 o'clock position.
4	Position indicator	The filled point on the display in the middle of the control ring shows the current horizontal navigation position between the appliance displays.
5	On/Off button	Switch the appliance on and off.
6	Status bar & Control centre	The status line shows the current status of functions or appliance components, e.g.: ▪ Home Connect connection status ▪ Childproof lock ▪ Water tank fill level Press to open the control centre →*Page 11*.

Control ring

Operation using the control ring is only possible when the appliance is switched on. You can use the control ring to navigate through the ring menus or the list menus and select settings.
When you touch the control ring, the display shows a ring in orange behind the control ring.



While operating the appliance, you can only use the control ring if you first select a function on the display.

Turn	Navigate in ring menus and list menus: ▪ Turn the control ring to the right to increase the values. ▪ Turn the control ring to the left to decrease the values. ▪ Turn the control ring to the right or left quickly to change the values in larger increments.

You can set how the control ring behaves in the basic settings →*Page 32*. In the "Standard" setting, press on the required function on the display and use the control ring to change the value of the function.
In the "Quick selection" setting, use the control ring, which is at the 12 o'clock position, to directly change the values for the function.

Process visualisation

For process visualisation, the appliance shows a section of a circle in orange behind the control ring.

The appliance shows the section of a circle in orange under the following conditions:
▪ A cooking time is set.

- A core temperature is set for the core temperature probe.

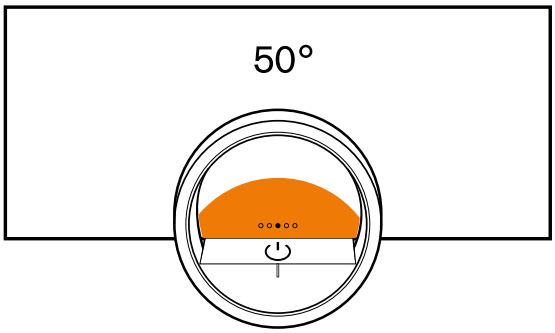

The section of the circle in orange becomes larger, the longer the timer runs or the closer the core temperature of the food approaches the set core temperature.
If no cooking time and no core temperature are set, the section of the circle pulsates in orange.

Display

The display shows the selected settings and setting options, as well as messages about the appliance's operating status.

Press	Selects or confirms the procedure or function
Press and hold	Displays additional information
Swipe horizontally	Navigates between appliance displays For example, in the "Manual" appliance display, swipe to the left or right **Note:** You can only use the function if you are in an appliance display →*Page 10* and no programme is running.

Note: If no display language is available in your national language, select a display language that is available, e.g. English.

Symbols

Use the symbols to start or stop functions, or to navigate in the appliance menu.

Operation

Symbol	Function
	Switching the appliance on or off at the control ring
	Opening the appliance door →*Page 17*
	Opening the control centre →*Page 19*
	Edit settings
	Call up additional information →*Page 20*
	Saving a favourite → *"Favourites", Page 24*
	Editing a favourite
	Deleting a favourite
	Calling up tips for programmes →*Page 24*
	Start
	Pause or stop
	Switch to the next step
	Switch to the previous step
	Back or accept settings
	Continue
	Confirm
	Delete
	Cancel
	Turning on the grill
	Switching between the display for the preferred types of heating and the display of all available types of heating → *"Basic settings", Page 32*
	Ending automatic cooking compartment drying →*Page 19*
	Starting or ending misting →*Page 18*

Timer functions

Symbol	Function
	Calling up the timer menu →*Page 20*
	Call up the long-term timer →*Page 22*
	Deleting the heating cycle from the long-term timer →*Page 23*
	Delaying the cooking time end →*Page 21*
	Reset the delay of the cooking time end → *"Resetting the delay of the cooking time end", Page 21*

Operation in the control center

Symbol	Function
	Opening the appliance door automatically after the cooking process →*Page 19*
	Activating the childproof lock →*Page 23*
	Switching the interior lighting on or off →*Page 19*
	Start functions with the Home Connect app via manual "Remote start" → *"Starting functions with the Home Connect app via manual 'Remote start'", Page 30*

Symbol	Function
	Home Connect Call up settings → *"Home ConnectSettings", Page 30*

Cleaning and servicing

Symbol	Function
	Cleaning aid →*Page 39*
	Descaling programme →*Page 40*
	Rapid drying →*Page 40*

Status

Symbol	Function
	Remote start →*Page 30*
	Core temperature sensor is inserted → *"Core temperature probe", Page 27*
	Core temperature probe is missing
	Status display for the heating process
	Display of a cooling process
	Pre-rinsing or post-rinsing
	Rapid drying →*Page 40* has started
	The appliance is in demo mode →*Page 45*
	Waste-water tank is empty and fresh-water tank is 100 % full
	Fresh-water tank is empty or waste-water tank is 100% full
	Water tank missing
	Water tank is locked

Status in the control centre

Symbol	Function
	Connection to the router: Strong → *"Home Connect", Page 30*
	Connection to the router: Ok → *"Home Connect", Page 30*
	Connection to the router: Weak → *"Home Connect", Page 30*
	No connection to the router. → *"Home Connect", Page 30*
	Appliance connected to the router. No connection to the Home Connect server. → *"Home Connect", Page 30*
	Software update status
	Fresh-water tank is locked
	Fresh-water tank missing
	Fresh-water tank: 0.0 l - 0.3 l
	Fresh-water tank: 0.4 l - 0.7 l
	Fresh-water tank: 0.8 l - 1.0 l
	Fresh-water tank: 1.1 l - 1.3 l
	Fresh-water tank: 1.4 l - 1.7 l
	Waste-water tank locked
	Waste-water tank missing
	Waste-water tank: Tank is inserted
	Waste-water tank: < 50% full
	Waste-water tank: 75% full
	Waste-water tank: 100% full

Appliance displays

You can find an overview of the appliance displays here.

Appliance displays	Use	Position indicator
Settings	▪ Adjusting the basic settings →*Page 32* ▪ Adjusting the Home Connect settings →*Page 30*	●○○○○
Modes & Service	▪ Starting the cleaning aid →*Page 39* ▪ Starting rapid drying →*Page 40* ▪ Starting the descaling programme →*Page 40* ▪ Starting the quick guide →*Page 20*	○●○○○
Manual operation	Setting the temperature, type of heating and timer function	○○●○○
Favourites	Calling up favourites →*Page 24*	○○○●○
Programmes	Calling up automatic programmes and setting recommendations →*Page 24*	○○○○●

Tip: In the basic settings →*Page 32*, you can set which appliance menu your appliance starts in.

Colours

The different colours are used to guide the user in the relevant setting situations.

red	▪ Error messages for which you may need the help of customer service.
orange	▪ Information that you must observe so that you can continue to use your appliance ▪ Symbols for starting and stopping
White	▪ Information ▪ Additional information

Appearance

Depending on the situation, the appearance of symbols, values or the entire display changes.

Zooming in ring menus and list menus	When you use the control ring to select a list entry in a list menu, the display enlarges this list entry and displays it as underlined. When you use the control ring to select a value in a ring menu, the display shows this value enlarged in the 12 o'clock position.
Zoom at end of cooking or core temperature probe	A few minutes before the cooking process ends, the appliance shows the remaining cooking time enlarged in the centre of the display. As soon as the current core temperature is just a few degrees below the set value, the display shows the current core temperature enlarged.
	All other displays are hidden.
Pared-down display	If the appliance does not detect a user in the immediate vicinity, the appliance reduces the amount of information shown on the display and only the most important information remains. This function is preset. You can change the setting in the basic settings → *Page 32*.

Control centre

The control centre provides you with access to functions that are only visible in the status bar via symbols. You can activate or deactivate functions in the control centre.

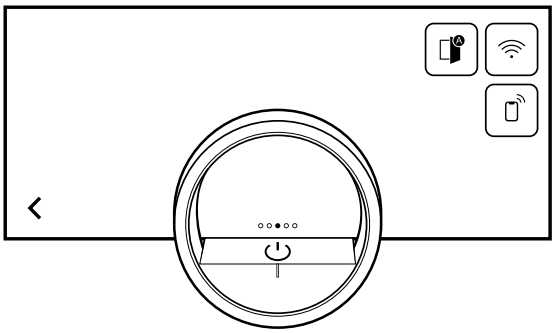

On the left-hand side, the display shows the symbols and texts with information on the current status of the appliance. On the right-hand side, the display shows the touch fields of the control centre.

4.7 Types of heating

This is where you will find an overview of the types of heating. You will find recommendations for using the types of heating.

Symbols	Function/type of heating	Temperature/setting	Application
100%	Hot air + 100% humidity	30-230 °C	Steaming at 70 - 100 °C: The food is fully enveloped by steam and is gently cooked without being overcooked. For vegetables, fish, seafood. Combined operation at 150 - 230 °C: The combination of hot air and steam guarantees a light and crispy result. For puff pastry, bread rolls.
80%	Hot air + 80% humidity	30-230 °C	Combined operation at 150 - 230 °C: The combination of hot air and steam guarantees a juicy yet crispy result. For poultry and meals with little inherent moisture, such as bread, bread rolls.

Symbols	Function/type of heating	Temperature/setting	Application
60%	Hot air + 60% humidity	30-230 °C	Combined operation at 150 - 230 °C: The combination of hot air and steam guarantees a juicy yet crispy result. For poultry and meals with a high level of moisture, such as bakes, lasagne.
30%	Hot air + 30% humidity [1]	30-230 °C	Combined operation at 150 - 230 °C: The inherent moisture of the meals is retained and they are prevented from drying out. For bakes, cakes.
0%	Hot air + 0% humidity	30-230 °C	The hot air is distributed evenly and moisture can escape from the cooking compartment. For moist foods, such as fruit cake, quiches, bakes.
	Grill + circulated air	30-230 °C	Extremely intensive heat from above, which is distributed quickly and evenly by the fan. Guarantees that a crust is formed with simultaneous all-round heating. For meat, poultry, fish, vegetable skewers. No preheating is required.
1	Grill level 1 + humidity	30-230 °C	Medium grill output, combined with steam, guarantees that a crust is formed with simultaneous all-round heating. For bakes and gratins.
2	Grill level 2 + humidity	30-230 °C	High grill output, combined with steam, guarantees that a crust is formed with simultaneous all-round heating. For stuffed vegetables and poultry.
	Sous-vide cooking	50-95 °C	Highly precise steaming of vacuum-packed meals in the temperature range of 50 - 95 °C. Nutrients and flavour are perfectly preserved. For meat, fish, vegetables and desserts. The cooking temperature should only be 1 - 2 °C above the target core temperature. As a result, the cooking time is relatively long and, at the same time, it is almost impossible to overcook the food. Meat and vegetables can be briefly seared after sous-vide cooking; it is preferable to sear fish before cooking it. With , you must pay attention to special food hygiene.
	Low temperature cooking	30-90 °C	With this cooking method, meat is particularly soft and juicy, flavours are retained and even strengthened. Only season sparingly. Sear the meat briefly on all sides at a high heat in the frying pan before cooking it. This gives the meat a crust, which prevents

[1] Type of heating used to determine the energy efficiency class in accordance with EN60350-1.

Symbols	Function/type of heating	Temperature/setting	Application
			the meat juices from escaping and produces the kind of flavour characteristic of a roast. The cooking temperature should only be 10 - 15 °C/50 - 60 °F above the target core temperature. The more the interior temperature is reduced, the longer the cooking process takes. You can do this to control the cooking time end.
	Dough proving	30-50 °C	Optimal climate at which the dough rises quickly without drying out. For yeast and sourdough.
	Keeping warm	50–90 °C	Optimal climate for keeping food warm without it drying out.
	Defrosting	40-60 °C	Optimal climate for gently defrosting frozen food without it drying out. For roasts, fish, vegetables.
	Regenerating	60–110 °C	Optimal climate for gently heating food without it drying out. Baked meals become crispy, as if they were prepared fresh. For plated meals, bread, pizza.
	Misting		Steam is let into the cooking compartment in order to increase the moisture.
	Add grill		The grill is switched on for a few minutes in order to additionally brown the food. The function can be used at temperatures from 150 °C.

4.8 Low power mode display

The appliance has different displays in low power mode. The displays depend on whether or not the appliance detects a user.
On the display without user detection, the appliance is switched off and the display is black. The appliance switches to low power mode without user detection if, when the appliance is switched on, you do not implement any settings for approx. 20 minutes or approx. 20 minutes after the appliance has completed a heating process.
If the proximity sensor detects a user or if you touch the control ring or press on the display, the appliance switches to low power mode with user detection.
In low power mode with user detection, the display shows the door opening symbol and the status bar. In the basic settings →*Page 32*, you can select whether the display also shows the GAGGENAU logo.
If the appliance is connected to the Home Connect app, the display shows .
→ *"Home Connect", Page 30*
The user detection distance depends on the selected basic settings.

In low power mode with user detection, the display brightness is reduced. The brightness of the display depends on the viewing angle.

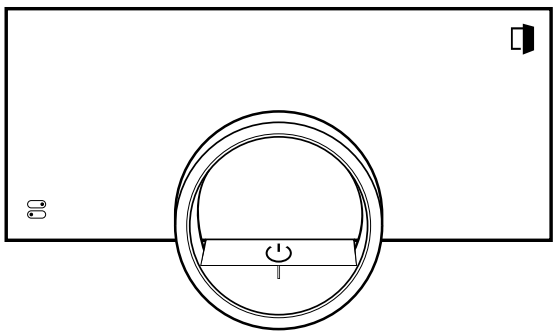

4.9 Additional information

If required, you can display additional information.
When you press on , the display shows additional information about the current function.
When you press and hold certain symbols or values, the display shows additional information about the current function. Additional information is available for all symbols that are arranged around the control ring, e.g. information about the set type of heating or current interior temperature.

In the basic settings →*Page 32*, you can activate or deactivate the "Info-i" function.
The appliance also occasionally displays important information about safety and the operating status automatically. These messages disappear automatically after a few seconds, or when you press ✓ to confirm the message.
For messages about Home Connect, the appliance also displays the Home Connect status.
→ *"Home Connect", Page 30*

4.10 Pop-up information

Pop-up messages contain explanations about current functions.
In the basic settings →*Page 32*, you can activate or deactivate the "Pop-up hints" function.

4.11 Quick guides

Your appliance comes with a quick guide to help you with various topics.

4.12 Cooling fan

The cooling fan switches on when the appliance is in operation. The hot air escapes above the door.
After removing your food from the appliance, keep the door closed until the appliance has cooled down. The appliance door should not be left half open as this may damage adjacent kitchen units. The cooling fan continues running for a certain period of time after the appliance has stopped heating and then it switches itself off automatically.
Do not cover the ventilation slots. Otherwise, the appliance will overheat.

4.13 Drying the cooking compartment

After operation with a steam function at temperatures of between 80 and 100 °C, the cooling fan and the fan wheel on the back wall of the cooking compartment continue to run for a while after the appliance is switched off and then they switch off automatically.
Automatic cooking compartment drying does not start with cooking processes below 80 °C.
After automatic cooking compartment drying, the cooking compartment may still contain moisture. The quick-drying function dries the cooking compartment fully. If the cooking compartment is very humid, we recommend you cancel the cooking compartment drying process and run a quick-drying process instead, which takes approx. 15 minutes.
→ *"Ending automatic cooking compartment drying", Page 19*
→ *"Start Rapid drying", Page 40*

After certain cooking processes, the cooking compartment drying process may take up to 95 minutes. Keep the appliance door closed while the cooking compartment is being dried.
If automatic cooking compartment drying does not start or there is still too much moisture in the cooking compartment after cooking compartment drying, start the quick-drying →*Page 40* process.

4.14 Automatic switch-off

For your protection, the appliance is equipped with an automatic switch-off function. The appliance switches off the heating process after 12 hours if you do not operate the appliance or programme a cooking time during this time. The display shows a message.
If you set a cooking time, you can use the appliance for longer.
If you set a cooking time, you can operate the appliance in the "Sous-vide cooking" type of heating for a maximum of 72 hours.
When programming with the long-term timer →*Page 22* function, the appliance switches off after up to 74 hours.

4.15 Wipe protection

Your appliance detects if you would like to clean the display or navigate between the appliance displays. The appliance locks the operation via the display and the control ring for a short time.
Press the display to return to the operation.

4.16 Proximity sensor

Your appliance detects whether you are in front of the appliance or moving towards it. Your appliance disregards if you are passing in front of it.
If you do not remain in the detection zone for the appliance when it is switched on, the appliance reduces the display to what is essential.

Note: You can set the distance at which the appliance can detect you in the basic settings. To ensure that the proximity sensor optimally detects the user, set the installation height of the appliance's upper edge in the basic settings →*Page 32*.

4.17 Door lock

The "Door lock" function prevents the appliance door from being opened accidentally. This is particularly useful when installing the appliance under the worktop.
In the basic settings →*Page 32*, you can activate or deactivate the "Door lock" function. When you activate the function and press ⍞, the display shows a slide control instead of the ⍞ symbol.
→ *"Opening the appliance door", Page 17*

5 Functions in the Home Connect app

The Home Connect app offers a range of functions and benefits.

- Monitor the cooking process, e.g. the remaining cooking time or the current core temperature.
- Start or stop a type of heating or program, or change the settings.
- Run important updates to the appliance software.
- Find the optimum settings or the optimum program for your recipe with the Oven Assistant function.

- When using the core temperature probe, obtain an estimate of the remaining cooking time.
- Change the basic settings for the appliance.
- Operate the main functions via Voice Control (using Alexa or Google Home).
- Find the appliance information and instructions.
- Find new recipes.

6 Accessories

Use original accessories. These have been made especially for your appliance.

Note: Accessories may become deformed if they get hot. Deformation has no effect on function. As the accessory cools down, it will regain its original shape.

The accessories supplied may differ depending on the appliance model.

Accessories		Use
Wire rack	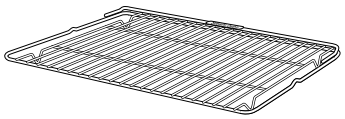	▪ Tableware ▪ Ovenproof dishes **Note:** Only use the combi-steam oven wire rack in the combi-steam oven and not in the oven or microwave. The wire rack may become discoloured at temperatures above 250 °C. The wire rack for the combi-steam oven is labelled with lettering.
Stainless steel cooking container, unperforated	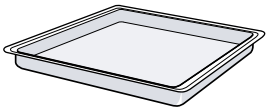	▪ Cooking rice, cereals and pulses ▪ Catching dripping liquid during steaming and defrosting
Stainless steel cooking container, perforated	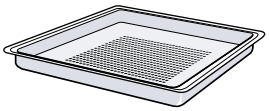	▪ Steaming vegetables and fish ▪ Extracting juice from berries ▪ Defrost
Grease filter	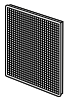	The grease filter →*Page 7* prevents the fan on the back wall of the cooking compartment from becoming dirty, e.g. from splattering

6.1 Other accessories

You can purchase other accessories from our customer service, specialist retailers or online.
You will find a comprehensive range of products for your appliance in our brochures and online: *www.gaggenau.com*
Accessories are appliance-specific. When purchasing accessories, always quote the exact product number (E no.) of your appliance.
You can find out which accessories are available for your appliance in our online shop or from our customer service.

Other accessories	Order number
Fully extendable telescopic pull-out rack	BA010301
Core temperature probe	BA010050
Stainless steel cooking container, perforated	BA220370
Stainless steel cooking container, unperforated	BA020361
Cooking container, non-stick, perforated	BA020390
Cooking container, non-stick, unperforated	BA020381
Glass tray	BA046118

Other accessories	Order number
Set with 4 descaling tablets	17002490
Stainless steel cooking container, GN 1/3, unperforated, 40 mm deep, 1.5 l	GN114130
Stainless steel cooking container, GN 1/3, perforated, 40 mm deep, 1.5 l	GN124130
Stainless steel cooking container, GN 2/3, unperforated, 40 mm deep, 3 l	GN114230
Stainless steel cooking container, GN 2/3, perforated, 40 mm deep, 3 l	GN124230
Cast aluminium roaster GN2/3, height 165 mm, non-stick	GN340231
Adapter for roaster	GN010330
Manual door opening aid	10044743

6.2 Sliding accessories into the cooking compartment

The wire rack and the perforated cooking container are fitted with a locking function. For the tilt protection to

work correctly, always insert the wire rack and the perforated cooking container into the cooking compartment the right way round. The locking function is not available for the unperforated cooking tray.

ATTENTION
The accessories may tip.
- Do not push the accessories between the shelf positions.

The oven's wire rack is not suitable for the combi-steam oven.
Corrosion may form on the oven's wire rack.
- Do not use the oven's wire rack in the combi-steam oven.

1. When inserting the wire rack, ensure that the lug [a] is facing upwards.

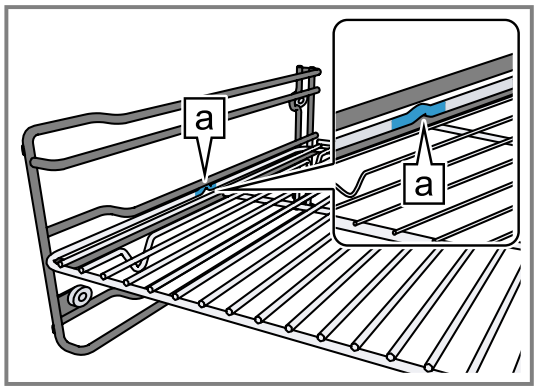

2. Ensure that the safety bracket on the wire rack is located at the rear and is facing upwards.
3. When inserting the cooking container, ensure that the lug [a] is facing upwards.

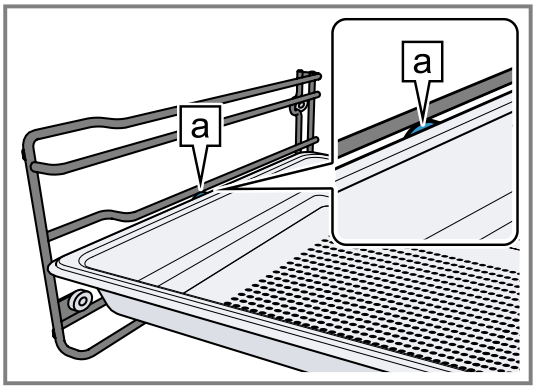

The locking function prevents the accessories from tilting when they are pulled out.

Note: To completely pull out the accessories, lift them slightly.
Remove any accessories that you do not require from the cooking compartment.

7 Before using for the first time

Configure the settings for initial start-up. Clean the appliance and accessories.

7.1 Initial start-up

Implement the settings for initial use before using your appliance.
First read the information under safety →*Page 2*.
The appliance must be installed and connected.
After connecting to the power supply, the appliance shows the "Initialisation" display.
The appliance shows the "Initialisation" display when it is first switched on after being connected to the power supply, if the initial start-up has not been completed successfully or the appliance has been restored to the factory settings.

Implement the following settings:
- Setting the language
- Activating Home Connect
- Setting the temperature unit
- Setting the capacity unit
- Setting the weight unit
- Setting the time format
- Setting the time

You can retroactively change all of the settings in the basic settings →*Page 32*.
Follow the instructions in the display. The display guides you through the initial settings.

Setting the language and implementing the remaining settings

1. Press .
✔ The display shows the preset language.
2. Use the control ring to select the required display language.
3. Press ✓ to confirm.
4. Press →.
5. Implement the remaining settings.
✔ The appliance starts a rinsing process.
✔ The display shows the appliance display that is selected in the basic settings →*Page 32* as the start screen.

Cleaning the door pane

Note: To ensure tightness, the door seal is lubricated at the factory. Residue may remain on the door pane.

- Before using for the first time, clean the door pane with glass cleaner and a window cloth or a microfibre cloth.
  Do not use a glass scraper.

Cleaning accessories

- Before first use, clean the accessories thoroughly using hot soapy water and a soft cloth.

Fitting the grease filter

- Hook the enclosed grease filter →*Page 7* onto the two bolts on the back wall of the cooking compartment.
  - Do not scratch the back wall of the cooking compartment.

Heating up the appliance

1. Ensure that there is no leftover packaging in the cooking compartment.
2. Remove any accessories from the appliance.
3. To eliminate the new-appliance smell, heat up the empty appliance with the door closed.
   The ideal setting for heating is 200 °C in the Hot air + 60% humidity type of heating for one hour.
4. Clean the appliance interior.

8 Basic operation

8.1 Switching on the appliance

1. To exit low power mode →*Page 13*, press ⏻ on the appliance's control ring or in the Home Connect app.

✔ The display shows a temperature, a symbol for the type of heating and a symbol for the timer.
✔ The appliance switches the interior lighting on.
✔ ⏻ lights up orange.

2. Set the temperature, type of heating and cooking time that you require.

Tip: In the basic settings →*Page 32*, you can specify which appliance display appears on the display after the appliance is switched on and whether you want the interior lighting to switch on.

Note: If you do not implement any settings for an extended period, the display shows the appliance display that is selected in the basic settings →*Page 32* as the start screen, and then the low power mode display.

8.2 Opening the appliance door

⚠ **WARNING – Risk of burns!**
The inside of the appliance door becomes very hot during operation.
- During or after operation of the appliance, only touch the appliance door at the surface intended for this on the side.
- Always open the appliance door as far as it will go.

⚠ **WARNING – Risk of scalding!**
Hot steam may escape when you open the appliance door. Steam may not be visible, depending on the temperature.
- Open the appliance door carefully.
- Keep children at a safe distance.

1. Press ⏍.
   - If the "Door lock" function is activated in the basic settings →*Page 32*, move the slide control to the other end.

✔ The appliance door opens automatically.

2. Only touch the appliance door at the designated area [a] and open it fully.

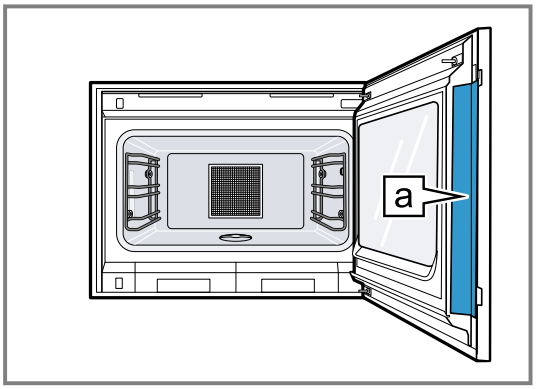

Tip: In the control centre, you can set that the appliance door opens automatically after the current cooking process.
→ *"Opening the appliance door automatically after the cooking process", Page 19*

8.3 Fill the water tank

⚠ **WARNING – Risk of fire!**
Due to the hot surfaces, vapours from flammable liquids may catch fire in the cooking compartment and cause an explosion.
The appliance door may spring open. Hot steam and jets of flame may escape.
- Only fill the water tank with water or with the descaling solution that is recommended by us.

⚠ **WARNING – Risk of burns!**
The front edge of the cooking compartment becomes very hot during operation.
- When removing the water tank, only touch its handle.

ATTENTION
Using unsuitable liquids may damage the appliance.
- Do not use any liquids other than water.
- Only use cold, fresh tap water, softened water or non-carbonated mineral water.

Note: Fill the fresh-water tank →*Page 7* before operating the appliance with steam.
To cook without steam, leave the empty water tank in the tank slot in the appliance.
The fresh-water tank is on the right-hand side of the appliance. The fresh-water tank has a capacity of approx. 1.6 litres.

1. Open the appliance door.

2. Pull the fresh-water tank out of the appliance until the fill level indicator is visible, or completely remove the fresh-water tank from the appliance.

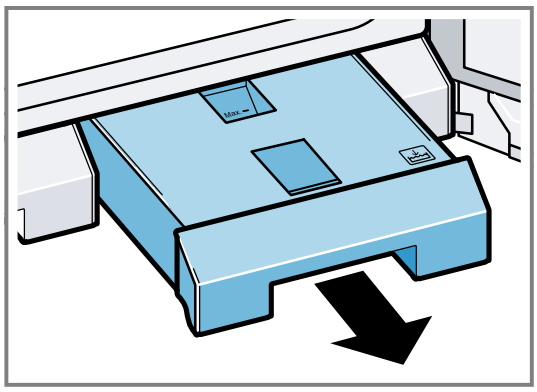

3. Open the valve on the fresh-water tank.
4. Fill the fresh-water tank with 1.7 litres of cold water up to the "Max." mark.

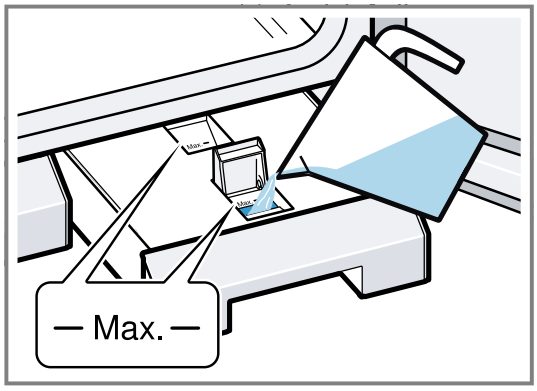

5. Close the valve on the fresh-water tank.
6. Slide the fresh-water tank back in as far as it will go.
7. When fitting the tank lid and sliding the tank in, observe the symbols for fresh water and waste water →*Page 7*.

8.4 Changing the type of heating

Note: You can change the type of heating during operation.

1. Press the current symbol for the type of heating.
2. Use the control ring to select the required type of heating.
3. Press on the selected type of heating or <, or wait a few seconds.
- ✔ The display shows the selected type of heating and the default temperature.
- ✔ If you have previously used the type of heating, the display shows the last temperature that you used.
4. If required, change the temperature. →*Page 18*
5. If the display shows a message window, follow the instructions in the message window.
6. Press ▸ to start the operation.

8.5 Changing the temperature

Note: You can change the temperature during operation.

Requirement: The type of heating is selected.

→ *"Changing the type of heating", Page 18*

1. Press the temperature displayed.
2. Use the control ring to select the desired temperature.
- ✔ The display shows the temperatures that are available for the selected type of heating.
3. To change the previously stored appliance display, press the required temperature or <.
   If you do not use the appliance for an extended period, the display returns to the previously stored appliance display.
- ✔ The display shows the selected temperature.

Note: Once the operation has started, the display shows a progress bar below the selected temperature if the changed temperature is more than 20 °C higher than the previous temperature.

8.6 Displaying the current interior temperature

- ▸ Press and hold the set temperature.
- ✔ The display shows the current interior temperature.

Note: During continuous operation after heating up, slight temperature fluctuations are normal.

8.7 Add grill

You can brown or gratinate your food using the grill. The "Add grill" function is available for the "Hot air + 100 % humidity", "Hot air + 80 % humidity", "Hot air + 60 % humidity", "Hot air + 30 % humidity"" and "Hot air + 0 % humidity" type of heating.
The "Add grill" function is not available until a temperature of 150 °C is reached.

Turning on the grill

ATTENTION
Temperatures above 250 °C damage the core temperature probe.
- ▸ If you use the core temperature probe, never place the food on the top shelf level.

1. Use the control ring to select the required type of heating and start the operation.
   The "Add grill" function is not available for all types of heating.
2. Press ⏦.
- ✔ ⏦ lights up.
- ✔ The appliance switches the grill off for approx. 3 minutes.

Deactivating the grill

Requirement: ⏦ lights up orange.
- ▸ Press ⏦.
- ✔ ⏦ lights up white.
- ✔ The grill is deactivated.

8.8 Misting

With the "Misting" function, the appliance injects steam into the cooking compartment. This enables you to bake food such as bread and bread rolls with sufficient moisture. It also gives yeast-risen baked goods a smooth, shiny crust.

The "Misting" function is available for the following types of heating only:
- "Hot air + 30 % humidity"

- "Hot air + 0% humidity"
- "Grill + circulated air"

Tip: To achieve optimum results, activate the function at the start of the cooking process.

Starting misting

1. Before heating, ensure that there is water in the fresh-water tank.
   If the fresh-water tank is empty, is not shown in the display.
2. Press .

✔ lights up.
✔ After a short time, the appliance injects steam into the cooking compartment.
✔ The appliance ends the misting automatically after approx. 5 minutes.

Cancelling misting

▸ Press .

8.9 Opening the appliance door automatically after the cooking process

The "automatic door opening" function at the end of the cooking process is only valid for the current cooking process.

⚠ **WARNING – Risk of burns!**
The appliance and its parts that can be touched become hot during use.
▸ Young children under 8 years of age must be kept away from the appliance.
▸ Ensure that young children are not in the vicinity of the appliance when the appliance door opens automatically.

Note: Use the "automatic door opening" function at the end of the cooking process only if required to prevent the food from being overcooked or burning.
In order to reduce the amount of moisture deposited on the unit fronts, open the appliance door fully after the cooking time has elapsed if possible.

1. Press .
2. Press .

✔ The display shows .
✔ The appliance opens the appliance door automatically after the current cooking process with a set cooking time end or set core temperature.

Note: The appliance door also opens when the child-proof lock →*Page 23* is activated or the door lock →*Page 14* is activated.

8.10 Deactivating the automatic appliance door opening

1. Press .
2. Press .

✔ The display shows .
✔ The automatic appliance door opening after the cooking process is deactivated.

8.11 Interrupting and continuing an operation

1. To interrupt the operation, press ■.
2. To continue the operation, press ▶.

8.12 Ending automatic cooking compartment drying

Note: When you open the appliance door, the appliance interrupts the automatic cooking compartment drying process.

Requirement: In the control centre, the display shows .

1. Press .
2. Press ✓.

✔ The appliance ends the automatic cooking compartment drying process.

Tip: Under "Modes & Service", you can start the "Rapid drying" function at any time.
→ *"Start Rapid drying", Page 40*

8.13 Opening and closing the control centre

1. Press to open the control centre.

✔ The appliance shows a description above the functions currently active.

2. To activate or deactivate a function as required, press the symbol for the function.
3. Press < to close the control centre.

✔ A pop-up message →*Page 14* tells you if a function has been activated.

8.14 Switching the interior lighting on or off

1. Press .
2. Press .

8.15 After each use

After a type of heating with steam, empty, clean and dry the fresh-water tank and waste-water tank. Dry the cooking compartment to ensure that no moisture remains in the appliance and to prevent odour from building up.

⚠ **WARNING – Risk of scalding!**
Hot steam may escape when you open the appliance door. Steam may not be visible, depending on the temperature.
▸ Open the appliance door carefully.
▸ Keep children at a safe distance.

Emptying the water tank

ATTENTION
Heat damages the water tank.
▸ Do not dry the water tank in the hot cooking compartment.

1. Open the appliance door carefully.
   Hot steam escapes.
2. Remove, empty, clean and dry both water tanks.

Drying the cooking compartment

1. Remove food residues and/or dirt from the cooking compartment as soon as the appliance has cooled down.
   Burnt-on food residue and/or dirt will be much harder to remove later.
2. Once the cooking compartment has cooled down, wipe it out and dry it thoroughly with a soft cloth.
3. If necessary, wipe dry any condensation on units or handles.
4. If required, you can use the function to quickly dry the cooking compartment.
   → *"Rapid drying", Page 40*

8.16 Switching off the appliance

- ▸ Press ⏻ on the control ring.
  Depending on the type of heating, you may hear an automatic rinsing process.
- ✔ The appliance switches to low power mode.

8.17 Switching on the appliance after automatic switch-off

Requirement: After prolonged operation, the Automatic switch-off →*Page 14* switches off the appliance.

- ▸ Press ⏻ on the control ring.

8.18 Displaying information

- ▸ Press ⓘ.
- ✔ The appliance displays information about the selected function.
  → *"Additional information", Page 13*

8.19 Displaying appliance information

1. Swipe repeatedly from left to right until the display shows "Modes & Service".
- ✔ The display shows the available functions in a list menu.
2. Use the control ring to select the "Appliance information" function.
3. Press "Appliance information".
- ✔ The display shows the appliance information, e.g. the E-number and the serial number.
4. Press < to exit the display.

8.20 Using quick guides

1. Select the "Modes & Service" appliance display.
   → *"Appliance displays", Page 10*
2. Use the control ring to select "Quick guide", then release the control ring.
3. Select the required quick guide and view it.

9 Timer functions

Your appliance has different timer functions, with which you can control its operation.

9.1 Overview of the timer functions

Use ◔ to select the different timer functions.

Timer function	Use
◔	Cooking time
→I	Cooking time end

A cooking time or cooking time end can only be set in combination with a type of heating.
The "Cooking time" and "Core temperature probe" functions are not available at the same time.

9.2 Calling up the timer menu

- ▸ Press ◔.
- ✔ The display shows "h" and "min" for hours and minutes.
- ✔ The display shows the display for the minutes enlarged in the 12 o'clock position.

9.3 Exiting the timer menu

- ▸ Press < or press on the selected cooking time to switch to the previously stored appliance display.
- ✔ The timer menu is closed.

9.4 Cooking time

When you set the cooking time for your food, the appliance automatically switches off after this time. The maximum possible cooking time depends on the set type of heating.
For most types of heating, you can set a cooking time of 1 minute up to 24 hours.
For the "Sous-vide cooking" and "Dehydrating" types of heating, the maximum cooking time is 72 hours.
You can change the type of heating and temperature while the cooking time counts down.

Setting the cooking time

Requirement: No core temperature is set. You cannot use the "Cooking time" and "Core temperature probe" functions at the same time.

1. Place the food in the cooking compartment.
2. Press ◔.
- ✔ The display shows h : min for hours and minutes.
3. Press the required value and use the control ring to change the value.
   - ▸ Turn the control ring slowly to change the value in smaller increments.
   - ▸ Turn the control ring quickly to change the value in greater increments.

   The maximum possible cooking time depends on the type of heating.
- ✔ The appliance automatically calculates the time for the cooking time end.
4. Press < or press on the selected cooking time to switch to the previously stored appliance display.
   If you do not use the appliance for an extended period, the appliance saves the settings and the dis-

play returns to the previously stored appliance display.
- ✔ If the appliance is in operation, the appliance shows the temperature, the operating mode, and the remaining cooking time.
- ✔ 3 minutes before the end of the cooking time, the display zooms in on the remaining cooking time.
- ✔ After the cooking time has elapsed, the display shows 00:00 and a signal tone sounds.

5. Turn the control ring or open the appliance door.
   The appliance door opens automatically if you have activated this function.
   → *"Opening the appliance door automatically after the cooking process", Page 19*
- ✔ The signal tone stops.

Note: If there is no further operation following the signal tone, the display shows the "Standing time timer" function with the + symbol. The display shows how much time has elapsed since the cooking time ended. After approx. 20 minutes without any further operation, the appliance switches to low power mode.

Changing the cooking time

Requirement: You have set a type of heating and a temperature.

1. Press ◔.
- ✔ The display shows h : min for hours and minutes.
2. Press the required value and use C to delete the value or use the control ring to change the value.
   - ▸ Turn the control ring slowly to change the value in smaller increments.
   - ▸ Turn the control ring quickly to change the value in greater increments.

   The maximum possible cooking time depends on the type of heating.
- ✔ The appliance automatically calculates the time for the cooking time end.

3. Press < or press on the selected cooking time to switch to the previously stored appliance display.
   If you do not use the appliance for an extended period, the display returns to the previously stored appliance display.
- ✔ The display shows the temperature, the type of heating, the remaining cooking time, and the cooking time end.

Deleting the cooking time

Tip: In the "Manual" appliance display, double-click on the cooking time in order to delete the cooking time without switching to the timer settings.

1. Press ◔.
- ✔ The display shows h : min for hours and minutes.
2. Press the required value and use C to delete the value.
- ✔ The display shows –:–.

3. Press < or press on the selected cooking time to switch to the previously stored appliance display.
   If you do not use the appliance for an extended period, the display returns to the previously stored appliance display.
- ✔ The display does not show a cooking time.

9.5 Cooking time end

As soon as you set a cooking time, the display shows the cooking time end. You can delay the cooking time end by a maximum of 12 hours.
For example, if you set a cooking time of 90 minutes at 10 a.m., you can delay the end of the cooking time so that the cooking process ends at 11.30 p.m. at the latest.
For most types of heating, the maximum cooking time is 24 hours.
For the "Sous-vide cooking" and "Dehydrating" types of heating, the maximum cooking time is 72 hours.
With the "Sous-vide cooking" type of heating, it is not possible to postpone the end of the cooking time for hygiene reasons.
Bear in mind that food which spoils easily should not be left in the appliance for too long.

Delaying the cooking time end

Requirement: No core temperature is set. You cannot use the "Cooking time" and "Core temperature probe" functions at the same time.

1. Place the food in the cooking compartment.
2. Press ◔.
- ✔ The display shows h : min for hours and minutes.

3. Set the cooking time. →*Page 20*
- ✔ The appliance automatically calculates the time for the cooking time end.

4. Press < or press on the selected cooking time to switch to the previously stored appliance display.
   If you do not use the appliance for an extended period, the display returns to the previously stored appliance display.
5. Press on the cooking time end.
6. Use the control ring to set the required cooking time end.
7. Press ▸.
- ✔ The appliance switches to standby.
- ✔ The display shows the temperature, the type of heating, and the cooking time end.
- ✔ If the cooking time end is one or more days in the future, the display shows "+1d".
- ✔ The appliance starts at the calculated time and automatically switches off once the cooking time has elapsed.
- ✔ After the cooking time has elapsed, the display shows 00:00 and a signal tone sounds.

8. Turn the control ring or open the appliance door.
   The appliance door opens automatically if you have activated this function.
   → *"Opening the appliance door automatically after the cooking process", Page 19*
- ✔ The signal tone stops.

Note: If there is no further operation following the signal tone, the display shows the "Standing time timer" function with the + symbol. The display shows how much time has elapsed since the cooking time ended. After approx. 20 minutes without any further operation, the appliance switches to low power mode.

Resetting the delay of the cooking time end

Note: In the "Manual" appliance display, double-click on the cooking time end in order to reset the delay of the cooking time end without switching to the timer settings.

Requirement: You have used the control ring to manually set the cooking time end.

1. Press →|.
2. To reset the delay of the cooking time, press ↺.

✔ The appliance calculates the cooking time end based on the cooking time.

✔ The display shows the cooking time end.

3. Press < or press on the cooking time end to switch to the previously stored appliance display.
   If you do not use the appliance for an extended period, the display returns to the previously stored appliance display.

9.6 Count-up cooking timer

If no cooking time is set, the display shows the time that has elapsed since the start of the process.
In the basic settings, you can switch the "Count-up cooking timer" function on or off.

Resetting "Count-up cooking timer"

1. Press and hold ◔.
2. Press ↺.

✔ The "Count-up cooking timer" function is reset.

10 Long-term timer

You can use this function to keep food warm and cook food for up to 74 hours without having to switch the appliance on or off. You can select the "Hot air" type of heating, temperature and the required cooking time. Bear in mind that food which spoils easily should not be left in the appliance for too long.
You can use the "Long-term timer" function to program 9 different heating cycles with a total cooking time of 74 hours. Set a start time and an end time. The display shows which settings have been selected.
You can define whether the interior lighting is switched on or switched off during the selected cooking time.
At the end of the selected cooking time, the appliance automatically deactivates the function. If required, you can deactivate the "Long-term timer" function at any time using the on/off button ⏻.
If the "Long-term timer" function is active, the display screen does not change when you approach the appliance.
If the "Long-term timer" function is active, you cannot operate the appliance via the display and the control ring and you can only open the door manually using the manual door opening aid. Install the manual door opening aid before you start the "Long-term timer" function.
If the "Long-term timer" function is active, the "Automatic door opening at the end of the cooking process" function is not available.
If the "Long-term timer" function is active and you open the appliance door, the appliance ends the heating operation after a randomly selected time of approx. 20 to 30 seconds. If you close the appliance door again, the appliance starts the heating operation after a randomly selected time of approx. 20 to 30 seconds. To avoid interrupting the heating operation, only open the appliance door between two heating operations.

10.1 Opening the "Long-term timer" function

Requirement: The "Long-term timer" function is set to "On" in the basic settings →*Page 32*.

1. Swipe repeatedly from left to right until the display shows "Modes & Service".
2. Use the control ring to select the "Long-term timer" function.
3. Set the switch to the right of the "Long-term timer" list entry to "On".

✔ The display shows the start time and the end time.

10.2 Selecting a time period for the "Long-term timer" function

Requirement: The "Long-term timer" function is set to "On" in the basic settings →*Page 32*.

1. Press the start time.
2. Use the control ring to change the start time.
3. Press <.

✔ The appliance automatically calculates the time for the end time.

✔ The display shows the start time and the end time.

4. Press the end time.
5. Use the control ring to change the end time.

✔ The display shows the start time and the end time.

6. Press ✓ to confirm.

✔ The display shows ⏲.

Note: If you set a delayed start time for the "Long-term timer" function, you can only start cooking processes with a programmed end time.
The following functions are not available:

- Cleaning programme
- Some cooking programmes
- Cooking processes with a set core temperature
- Cooking processes without a cooking time end

10.3 Selecting the settings for the interior lighting while the "Long-term timer" function is active

Requirement: A start time and an end time are selected.

→ *"Selecting a time period for the Long-term timer function", Page 22*

1. Press →.
2. To switch the interior lighting on at the lowest lighting level for the entire time while the "Long-term timer" function is active, set the switch for the interior lighting to "On".
3. To switch the interior lighting off for the entire time while the "Long-term timer" function is active, set the switch for the interior lighting to "Off".

✔ The display shows the start time and the end time.

4. To program the first heating cycle, press +.
   → *"Setting heating cycles", Page 23*

10.4 Setting heating cycles

1. Press ⏲.
✔ The display shows the settings that have been selected for the "Long-term timer" function.
2. Press "Summary".
3. Press ←.
4. Press +.
5. Press the temperature to set it.
   ▸ Use the control ring to select the required temperature and press <.
6. Press the start time to change it.
   ▸ Use the control ring to change the start time and press <.
7. Press the end time to change it.
   ▸ Use the control ring to change the end time and press <.
✔ The display shows the settings for the first heating cycle.
8. Press ✓ to confirm.
9. To program a further heating cycle, if needed, press +.
   ▸ Program the settings for the further heating cycle.
   You can program up to 9 heating cycles.
✔ The display shows the settings for the programmed heating cycles.
✔ The display shows the start time and the end time for the "Long-term timer" function.
10. Touch the control ring.
✔ The display shows the settings for the programmed heating cycles.
11. Navigate though the list of programmed heating cycles in the menu with the control ring.

10.5 Changing the time period for the "Long-term timer" function

1. Press ⏲.
✔ The display shows the settings that have been selected for the "Long-term timer" function.
2. Press "Summary".
3. Press ←.
4. Press →.
✔ The display shows the start time and the end time.
5. Press the start time and use the control ring to change the start time.

10.6 Changing settings for the interior lighting

1. Press ⏲.
✔ The display shows the settings that have been selected for the "Long-term timer" function.
2. Press "Summary".
3. Press ←.
4. To switch the interior lighting on at the lowest lighting level for the entire time while the "Long-term timer" function is active, set the switch for the interior lighting to "On".
5. To switch the interior lighting off for the entire time while the "Long-term timer" function is active, set the switch for the interior lighting to "Off".

10.7 Changing the heating cycle

1. Press ⏲.
✔ The display shows the settings that have been selected for the "Long-term timer" function.
2. Press "Summary".
3. Press ←.
4. Navigate though the list of programmed heating cycles in the menu with the control ring and press the required heating cycle.
5. To change the settings for the heating cycle, press the corresponding settings.
6. To save the changed setting, press <.

10.8 Deleting a heating cycle

1. Press ⏲.
✔ The display shows the settings that have been selected for the "Long-term timer" function.
2. Press "Summary".
3. Press ←.
4. Navigate though the list of programmed heating cycles in the menu with the control ring and select the required heating cycle.
5. Press 🗑.

10.9 Starting the "Long-term timer" function

Tip: Install the manual door opening aid before you start the "Long-term timer" function.

▸ Press ▶ to start.
✔ The "Long-term timer" function starts.
✔ At the end of the "Long-term timer" function, the appliance switches off.

10.10 Switching off the "Long-term timer" function

1. Swipe repeatedly from left to right until the display shows "Modes & Service".
2. Use the control ring to select the "Long-term timer" function.
3. Set the switch to the right of the "Long-term timer" list entry to "Off".

Note: To switch off the "Long-term timer" function, you can also press ⏻ on the control ring.

11 Childproof lock

Activate the "Childproof lock" function so that children cannot accidentally switch the appliance on or change the settings.
If the childproof lock is activated, operation via the display and the control ring is not possible.

If the childproof lock is activated and the power fails, the childproof lock can be deactivated when the power comes back on.
You can activate the childproof lock even during operation.

11.1 Activating the childproof lock

Requirement: In the basic settings →*Page 32*, the option "On" is set for the "Display child lock" function.
1. Press .
2. Press .
✔ The display shows .
✔ The "Childproof lock" function is activated.

11.2 Deactivating the childproof lock

1. Press and hold for approx. 2 seconds.
✔ The "Childproof lock" function is deactivated.
2. Set the appliance as normal.

12 Favourites

In the "Favourites" appliance display, you can save preferred automatic programmes, setting recommendations or combinations of type of heating, temperature, core temperature or cooking time. The appliance adopts the selected settings, such as temperature, cooking time, weight or level of browning for the favourites.
You can individually select the names for the favourites.
You can use the Home Connect app to change the saved settings for the favourite or the order of the favourites.
After starting the favourites, you can change the settings.
→ *"Changing the favourite", Page 24*

12.1 Creating the first favourites

Notes
- You can save a food as a favourite at the beginning or end of an automatic programme or a setting recommendation.
- You can save a favourite in the "Manual operation" appliance display. As soon as you have selected the settings for the temperature, the type of heating and the cooking time, the display shows .

Requirement: The settings for the favourites are selected or a heating process ends.
1. Press .
✔ The display shows the "Favourites" appliance display.
2. Press .
3. Use the keyboard to enter a name.
4. Press ✓.

12.2 Selecting a favourite

1. Swipe repeatedly from right to left until the display shows "Favourites".
→ *"Appliance displays", Page 10*
2. Use the control ring to select the desired favourites.
3. Press the favourites.

12.3 Renaming a favourite

Requirement: The favourite has been selected.
→ *"Selecting a favourite", Page 24*
1. Press .
2. Enter the name for the favourite.
3. Press ✓ to confirm.

12.4 Starting the favourite

Requirement: The favourite has been selected.
→ *"Selecting a favourite", Page 24*
▸ Press ▶ to start.

12.5 Changing the favourite

The availability of settings depends on the favourite selected.

Requirements
- The favourite has been selected.
→ *"Selecting a favourite", Page 24*
- The favourite is stopped.

1. Change the selected settings, e.g. the temperature, the type of heating or the cooking time.
The "Add grill" function is unavailable.
The "Automatic door opening at process end" function is available.
If you have saved an automatic programme as a favourite, you can only change certain settings, e.g. the weight, the required degree of browning, the thickness of the food or the cooking level of the food.
If you have saved a setting recommendation as a favourite, you can change the settings on the appliance as soon as the favourite is started. You can only save the changed settings via the Home Connect app. As soon as the favourite is stopped or has finished, the Home Connect app asks if you would like to save the settings in the favourite.
2. Press ✓.
3. Press ▶ to start.
✔ The operation starts with the changed settings.

Note: The appliance does not save the changed settings in the selected favourite. If you select the favourite again, the settings match the settings when the favourite was created.
You can use the Home Connect app to change the settings for the favourites.

12.6 Deleting a favourite

Requirement: The favourite has been selected.
→ *"Selecting a favourite", Page 24*
1. Press .
2. Press ✓ to confirm.

13 Programmes

The "Programmes" appliance display includes the automatic programmes and setting recommendations.

13.1 Automatic programmes

You can use the "Automatic programmes" function to cook a wide variety of food. The appliance selects the optimal setting for you.
In automatic programmes, the appliance defines the optimal settings after you enter the weight and required cooking result, for example. The automatic programmes are labelled with a checkmark in the overview list.
Depending on the type of heating, the cooking time only begins once the appliance has preheated. You can find information about the accessories or shelf levels in the tip for the respective programme.

Note: In the basic settings →*Page 32*, you can filter automatic programmes, e.g. with the following filters "Vegetarian" or "No meat & poultry".

Information about the settings for the automatic programmes

Observe the instructions for the settings of the automatic programmes.

- The cooking result depends on the quality of the food and the size and type of cookware. For an optimal cooking result, only use food that is in good condition and meat that is chilled to refrigerator temperature. For frozen food, only use food straight out of the freezer.
- The food is divided into categories. One or more dishes are listed for each category. The display shows the last selected meal.
- For some dishes, the appliance asks you to enter, for example, the weight, the desired level of browning, the thickness of the food or the cooking level of the food.
- For some food, preheat the empty cooking compartment for an optimal cooking result. Only place the food in the cooking compartment once the preheating is complete and a message is shown on the display.
- The appliance displays the selected settings next time as a suggestion.
- For some programmes, you need the core temperature probe. Use the core temperature probe →*Page 27* for these programmes.
- To achieve good results, the cooking compartment must not be too hot for the type of food you have selected. If the cooking compartment is too hot, the display shows a corresponding notification. Allow the appliance to cool and restart it.

Selecting an automatic programme

1. Swipe repeatedly from right to left until the display shows "Programmes".
✔ The display shows the first programme in the "Vegetables" category or the last set automatic programme.
✔ The display shows the preselected values for the programme or the last set values.
✔ The display shows a tip and symbols for the Favourites →*Page 24* category and for the programme start.
2. Use the control ring to select the required meal and press on the required meal.
✔ The display shows the name of the selected dish and the corresponding values.

Changing category

1. Press the symbol for the category.
✔ The display shows the available categories in the ring menu.
2. Select the required category with the control ring.
3. Press < or press the category in order to confirm the selection.
✔ The display shows the first dish in the selected category and the corresponding values.

Changing the programme

1. Press on the name of a dish or navigate through the list of dishes in the menu with the control ring.
2. Press the required food.
✔ The display shows the name of the selected dish and the corresponding settings.
3. Press the setting.
4. Use the control ring to change the setting and press on the required setting.
Not all settings can be changed.
You cannot change the type of heating.
5. Press <.
✔ The display shows the name of the selected dish and the corresponding settings.
6. Press ▭.
✔ The display shows information about the accessories and preparation.
7. Follow the information on the display.

Starting the automatic programme

▸ Press ▶.
✔ Once the cooking time has elapsed, a signal tone sounds.
✔ The appliance stops heating.

Note: If you open the appliance door during an automatic programme, this affects the cooking result. Do not open the appliance door, or only open it briefly. The appliance interrupts the automatic programme and continues to run when you close the appliance door.

Extending the cooking time

If you are still not satisfied with the cooking result, you can increase the cooking time again.

1. Press 00.00.
2. Select the required cooking time.
3. Press ✓ to confirm.

Cancelling the automatic programme

Note: Once you have started the automatic programme, you can no longer change the settings.

▸ Press ■.
✔ The appliance ends the automatic programme.

Saving a programme as a favourite

You can save a programme as a favourite at the start or end of an automatic programme.

1. Press 🔖.
✔ The display shows the "Favourites" appliance display.
2. Press ✎.
3. Use the keyboard to enter a name.
4. Press ✓.
You can only change the settings for a saved favourite via the Home Connect app.

13.2 Recommended settings

With setting recommendations, the appliance specifies the optimal type of heating.
The setting recommendations are not labelled with a checkmark in the overview list.
If a weight is specified in the tip, the recommended temperature and the cooking time relate to this weight specification. You can adapt the temperature and cooking time within the available ranges.
Depending on the type of heating, the cooking time only begins once the appliance has preheated. You can find information about the accessories or shelf levels in the tip for the respective programme.

Information on the setting recommendations

Observe the information on the setting recommendations.

- The cooking result depends on the quality of the food and the size and type of cookware. For an optimal cooking result, only use food that is in good condition and meat that is chilled to refrigerator temperature. For frozen food, only use food straight out of the freezer.
- The food is divided into categories. One or more dishes are listed for each category. The display shows the last selected meal.
- With the setting recommendations, the appliance specifies the type of heating.
- You can change the temperature and the cooking time in the specified areas.
- For some food, preheat the empty cooking compartment for an optimal cooking result. Only place the food in the cooking compartment once the preheating is complete and a message is shown on the display.
- The appliance displays the selected settings next time as a suggestion.
- To achieve good results, the cooking compartment must not be too hot for the type of food you have selected. If the cooking compartment is too hot, the display shows a corresponding notification. Allow the appliance to cool and restart it.

Selecting a setting recommendation

1. Swipe repeatedly from right to left until the display shows "Programmes".
✔ The display shows the first programme in the "Vegetables" category or the last set automatic programme.
✔ The display shows the preselected values for the programme or the last set values.
✔ The display shows a tip and symbols for the Favourites category and for the programme start. →*Page 24*
2. Use the control ring to select the required meal and press on the required meal.
✔ The display shows the name of the selected dish and the corresponding values.

Changing category

1. Press the symbol for the category.
✔ The display shows the available categories in the ring menu.
2. Select the required category with the control ring.
3. Press < or press the category in order to confirm the selection.
✔ The display shows the first dish in the selected category and the corresponding values.

Changing the programme

1. Press on the name of a dish or navigate through the list of dishes in the menu with the control ring.
2. Press the required food.
✔ The display shows the name of the selected dish and the corresponding settings.
3. Press the setting.
4. Use the control ring to change the setting and press on the required setting.
   Not all settings can be changed.
   You cannot change the type of heating.
5. Press <.
✔ The display shows the name of the selected dish and the corresponding settings.
6. Press □.
✔ The display shows information about the accessories and preparation.
7. Follow the information on the display.

Starting a setting recommendation

▸ Press ▶.
✔ Once the cooking time has elapsed, a signal tone sounds.
✔ The appliance stops heating.

Note: If you open the appliance door when a setting recommendation is running, this affects the cooking result. Do not open the appliance door, or only open it briefly. The appliance interrupts the setting recommendation and continues to run when you close the appliance door.

Extending the cooking time

If you are still not satisfied with the cooking result, you can increase the cooking time again.

1. Press 00.00.
2. Select the required cooking time.
3. Press ✓ to confirm.

Setting recommendations

Note: Once you have started the setting recommendation, you can change the settings.

1. Press on the setting recommendation.
2. Change the desired settings.

Saving a programme as a favourite

You can save a programme as a favourite at the start or end of a setting recommendation.

Requirements

- The temperature and type of heating are set.
- The cooking time or core temperature is set.

1. Press ☆.
✔ The display shows the "Favourites" appliance display.
2. Press ✎.
3. Use the keyboard to enter a name.
4. Press ✓.
   You can only change the settings for a saved "Favourites" via the Home Connect app.

14 Core temperature probe

The core temperature probe makes it possible to cook with exact precision. The core temperature probe measures the temperature at 3 measuring points inside the food. When the required core temperature is reached, the appliance automatically switches off, ensuring that all food is cooked perfectly.

⚠ WARNING – Risk of burns!
The cooking compartment and the core temperature probe become very hot.
- Use oven gloves when inserting and removing the core temperature probe.

ATTENTION
Temperatures above 250 °C damage the core temperature probe.
- Only use the core temperature probe in your appliance at a maximum temperature of 230 °C.
- When using the "Grill + circulated air", "Grill level 1 + humidity" and "Grill level 2 + humidity" types of heating with the core temperature probe, do not put the food into the top shelf level.

⚠ WARNING – Risk of electric shock!
An incorrect core temperature probe may damage the insulation.
- Only use the core temperature probe that is suitable for this appliance.

ATTENTION
Aggressive cleaning agents may damage the core temperature probe.
- Do not clean the core temperature probe in the dishwasher.

⚠ WARNING – Risk of injury!
The core temperature probe is sharp.
- Handle the core temperature probe with care.

Only use the core temperature probe that is suitable for this appliance. The core temperature probe →*Page 15* is available as a spare part from customer service or the online shop. You can also use the core temperature probe of the Gaggenau oven or the microwave oven of the same appliance series.
If you use the core temperature probe, never place the food on the top shelf level.
After use, always remove the core temperature probe from the cooking compartment. Never store the core temperature probe in the cooking compartment.
After each use, clean the core temperature probe with a damp cloth.
The measurable range is 15 °C to 100 °C. Outside of the measurable range, the display shows "<15 °C" or ">100 °C" for the current core temperature.
If you leave food in the cooking compartment for some time after cooking, the core temperature will continue to rise somewhat due to the residual heat in the cooking compartment.

14.1 Inserting the core temperature probe into the food

1. Insert the core temperature probe fully into the food.
2. Do not insert the core temperature probe into the fat.
3. Ensure that the core temperature probe is not touching any cookware or any bones.
4. Place the food in the cooking compartment.

Inserting the core temperature probe into meat

1. Insert the core temperature probe at the thickest point on the side as far as it will go into the meat.

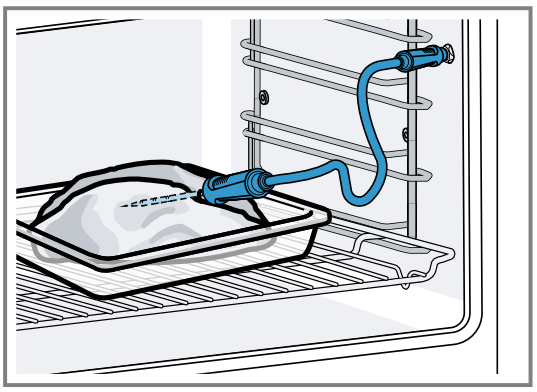

2. If there is more than one piece of meat, insert the core temperature probe into the middle of the thickest piece.

Inserting the core temperature probe into poultry

1. Insert the core temperature probe as far as it will go into the thickest point in the breast.

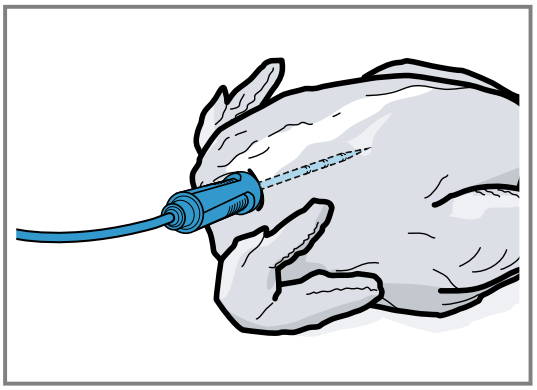

2. Depending on its composition, insert the core temperature probe into the poultry crossways or lengthways.

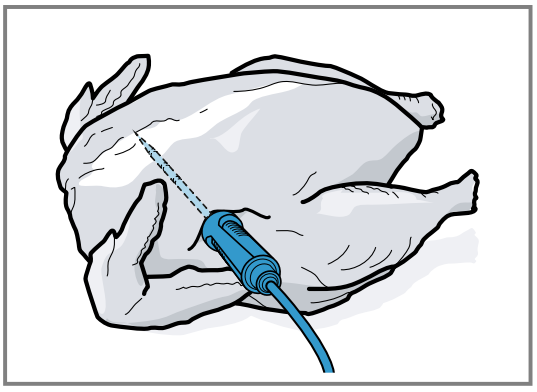

3. With poultry, ensure that the tip of the core temperature probe does not protrude into the cavity in the middle of the bird.

Inserting the core temperature probe into fish

1. Insert the core temperature probe behind the head as far as it will go towards the spine.

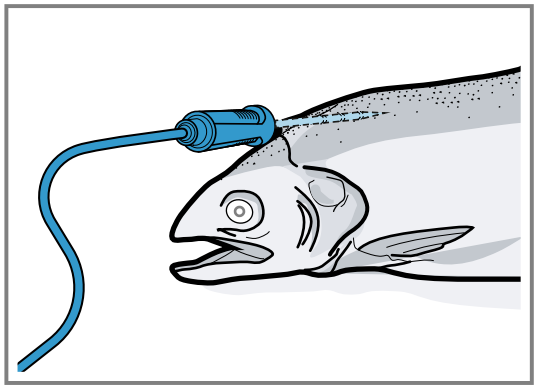

2. Place the whole fish onto the wire rack and prop it up in the swimming position using half a potato.

14.2 Turning the food

1. Do not pull out the core temperature probe when turning the food.
2. Turn the food.
3. Once you have turned the food, check that the core temperature probe is correctly positioned in the food.

14.3 Setting the core temperature probe

ATTENTION
The heat of the grilling surface may damage the core temperature probe.
- Ensure that the distance between the glass grilling surface and the core temperature probe and the cable of the core temperature probe is a few centimetres. In doing so, ensure that the meat can expand during the cooking process.

You may damage the cable of the core temperature probe with the appliance door.
- Do not trap the cable of the core temperature probe in the appliance door.

Requirement: A cooking time end is not set. The cooking time end and core temperature probe functions are not available at the same time.

1. Slide the food into the cooking compartment with the core temperature probe inserted.
2. Insert the core temperature probe into the socket in the cooking compartment.
3. Close the appliance door.
✔ The display shows the current cooking compartment temperature and the symbol for the core temperature probe .
4. Select the required type of heating and cooking compartment temperature with the control ring.
5. Press .
6. Use the control ring to select the required core temperature →*Page 29*.
   - Ensure that the set core temperature is higher than the current core temperature.

   You can change the set core temperature at any time.
7. The set core temperature can be cleared and reset as needed with C or the control ring.
8. Press < or press the set core temperature.
9. Press ▶.

✔ The appliance heats up using the set type of heating.
✔ Once you have set the core temperature, the display shows the type of heating and the current core temperature.
✔ Once you have set the core temperature, the display shows the type of heating and intermittently switches to the estimated time →*Page 29* until the core temperature is reached and the current and set core temperature.
✔ If the current core temperature is 5 °C below the set core temperature, the display shows the current and set core temperature as enlarged.
✔ Once the core temperature for the food has been reached, the display shows the required core temperature alongside the set core temperature and a signal sounds.
✔ The appliance ends the cooking process automatically.

Note: If you do not continue to operate the appliance after the signal tone, the display shows how much time has elapsed since the food reached the core temperature.
Once you start operating the appliance again, the appliance clears the time display. After approx. 20 minutes without any further operation, the appliance switches to low power mode.

14.4 Deleting the set core temperature

- In the "Manual" appliance display, double-click on the temperature.
  → *"Appliance displays", Page 10*

✔ The display shows the current core temperature.

14.5 Changing the set core temperature

1. Press .
2. Change the set core temperature with the control ring.
   Once the display shows the set core temperature enlarged in the 12 o'clock position, you can change the set core temperature directly using the control ring.

14.6 Using the core temperature probe with the "Sous-vide cooking" type of heating

Note: Only use foam tape and cooking bags that are heat-resistant, suitable for sous-vide cooking and of high quality.

1. Position and vacuum the food in a special heat-resistant sous-vide cooking bag.
2. Stick the heat-resistant foam tape onto the cooking bag.

3. Insert the core temperature probe through the foam tape, the cooking bag and the thickest part of the food.
   ▸ Position the tip of the core temperature probe in the centre of the food.

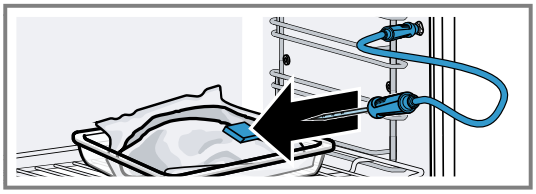

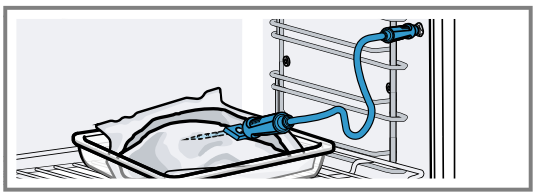

4. Set the interior temperature at least 1 to 2 °C higher than the desired core temperature.

14.7 Core temperature guideline values

The following overview provides you with guideline values for the core temperature. The guideline values depend on the quality and composition of the food.
Only use fresh food that has not been frozen. For hygiene reasons, ensure that critical foods such as fish and game reach a core temperature of at least 62-70 °C and poultry and minced meat 80-90 °C.

Food	Core temperature guideline value in °C
Beef	
Sirloin, fillet of beef, entrecôte, roast beef, rare	47-55
Sirloin, fillet of beef, entrecôte, roast beef, medium rare	56-63
Sirloin, fillet of beef, entrecôte, roast beef, medium	64-70
Sirloin, fillet of beef, entrecôte, roast beef, well done	71-75
Pork	
Joint of pork	75-80
Loin of pork, medium rare	65-70
Loin of pork, medium	71-75
Loin of pork, well done	76-80
Meatloaf	85
Fillet of pork, medium rare	65-70
Pork fillet, medium	71-75
Veal	
Joint of veal, well done	75-80
Breast of veal, stuffed, well done	75-80
Saddle of veal, medium	64-70
Saddle of veal, well done	71-75
Fillet of veal, rare	50-55
Fillet of veal, medium rare	56-63
Fillet of veal, medium	64-70
Fillet of veal, well done	71-75
Game	
Saddle of venison	60-70
Leg of roe venison	70-75
Venison loin steaks	65-70
Saddle of hare, saddle of rabbit	65-70
Poultry	
Chicken	90
Guinea fowl	80-85
Goose, turkey, duck	85-90
Duck breast, medium rare	55-60
Duck breast, medium	61-70
Duck breast, well done	71-80
Ostrich steak	60-65
Lamb	
Leg of lamb, medium	65-69
Leg of lamb, well done	70-80
Saddle of lamb, medium rare	55-60
Saddle of lamb, medium	61-64
Saddle of lamb, well done	65-75
Mutton	
Leg of mutton, medium rare	70-75
Leg of mutton, medium	76-80
Leg of mutton, well done	81-85
Saddle of mutton, medium	70-75
Saddle of mutton, well done	76-80
Fish	
Fillet, whole, medium	58-64
Fillet, whole, well done	65-68
Terrine	62-65
Other	
Bread	96
Pâté	72-75
Terrine	70-75
Foie gras	45-60
Reheating food	75

14.8 Estimated cooking time

After preheating, if the appliance has a temperature setting above 120 °C and the core temperature probe is inserted, the display shows an estimated cooking time a few minutes into the cooking time. The appliance continuously updates the estimated cooking time.

The estimated cooking time is only available if you connect your appliance to the Home Connect app.
The longer the cooking process lasts, the more precise the estimated cooking time becomes. Do not open the appliance door; this distorts the estimated cooking time.

The display shows the estimated cooking time in manual operation and in the automatic program.
To display the current core temperature, press on the set core temperature.

15 Home Connect

This appliance is network-capable. Connecting your appliance to a mobile device lets you control its functions via the Home Connect app, adjust its basic settings and monitor its operating status.
The Home Connect services are not available in every country. The availability of the Home Connect function depends on the availability of the Home Connect services in your country. You can find information about this at: *www.home-connect.com*.
The Home Connect app guides you through the entire login process. Follow the instructions, noting the information in the Home Connect app.

Notes
- Please note the safety precautions in this instruction manual and make sure that they are also observed when operating the appliance via the Home Connect app.
  → *"Safety", Page 2*
- Operating the appliance on the appliance itself always takes priority. During this time it is not possible to operate the appliance using the Home Connect app.
- In networked standby mode, the appliance requires a maximum of 2 W.

15.1 Setting up Home Connect

Requirements
- The appliance is connected to the power supply and is switched on.
- You have a mobile device with a current version of the iOS or Android operating system, e.g. a smartphone.
- The appliance is receiving signals from the WLAN home network (Wi-Fi) at its installation location.
- The mobile device and the appliance are within range of your home network's Wi-Fi signal.

1. Scan the following QR code.

   You can install the Home Connect app and connect your appliance via the QR code.
2. Follow the instructions in the Home Connect app.

15.2 Home ConnectSettings

You can adjust the home network settings in your appliance's basic settings.

Which settings the display shows will depend on whether Home Connect has been set up and whether the appliance is connected to your home network.
You can switch the network connection on or off as required. The network information is retained after the appliance is switched off. After switching on the appliance, wait for a few seconds until it reconnects to the home network.
The display uses different symbols to show the connection strength to the router.

Note: In networked standby mode, the appliance requires a maximum of 2 W.

You can use the Home Connect app to access the appliance's functions. If you select the "Off (monitoring only)" setting in the basic settings →*Page 32* for "Remote start", the Home Connect app only shows the appliance's operating status and you can configure the settings.
If you select the "Permanent" setting in the basic settings →*Page 32* for "Remote start", you can start and operate your appliance at any time without any prior approval on the appliance.
If you select the "Manual" setting in the basic settings →*Page 32* for "Remote start", the appliance requires approval in the control centre in order to start a function.
In the basic settings →*Page 32*, you can use "Network information" to display the network information.
In the basic settings →*Page 32*, you can use "Network credentials reset" to delete all network access data from the appliance at any time.

15.3 Starting functions with the Home Connect app via manual "Remote start"

You can use the Home Connect app to set the appliance remotely via the "Remote start" function. If you select the "Manual" setting in the basic settings for "Remote start", the appliance requires approval in the control centre in order to start a function.

⚠ WARNING – Risk of fire!
Combustible objects that are left in the cooking compartment may catch fire.
- ▸ Never store combustible objects in the cooking compartment.
- ▸ If smoke is emitted, the appliance must be switched off or the plug must be pulled out and the door must be held closed in order to stifle any flames.

Requirements
- The appliance is connected to the home network and to the Home Connect app.
- To start a function, the "Manual" setting is selected in the basic settings for "Remote start".

1. To activate manual remote start, press ⊜ and then ☝.

2. Configure a setting in the Home Connect app and send it to the appliance.
3. Start a function.
   Note: If you open the appliance door more than 15 minutes after activating remote start or after the operation ends, the appliance deactivates the manual remote start.
   24 hours after activating remote start, the appliance deactivates the manual remote start.

15.4 Starting functions with the Home Connect app via permanently activated "Remote start"

You can use the Home Connect app to set and start the appliance remotely via the "Remote start" function. If you select the "Permanent" setting in the basic settings for "Remote start", the appliance does not require approval in the control centre in order to start a function.

⚠ **WARNING – Risk of fire!**
Combustible objects that are left in the cooking compartment may catch fire.
- ▸ Never store combustible objects in the cooking compartment.
- ▸ If smoke is emitted, the appliance must be switched off or the plug must be pulled out and the door must be held closed in order to stifle any flames.

Requirements
- The appliance is connected to the home network and to the Home Connect app.
- To start a function, the "Permanent" setting is selected in the basic settings for "Remote start".

1. Configure a setting in the Home Connect app and send it to the appliance.
2. Start a function.

15.5 Using the Home Connect app to change settings

You can use the Home Connect app to set the appliance remotely.

⚠ **WARNING – Risk of fire!**
Combustible objects that are left in the cooking compartment may catch fire.
- ▸ Never store combustible objects in the cooking compartment.
- ▸ If smoke is emitted, the appliance must be switched off or the plug must be pulled out and the door must be held closed in order to stifle any flames.

Requirement: The appliance is connected to the home network and to the Home Connect app.
- ▸ Configure a setting in the Home Connect app and send it to the appliance.

15.6 Switching the Wi-Fi on or off

Requirement: The On and "Off" settings are only available if a connection to the Home Connect server has been established.

1. Press ⊜ in the status bar.
2. Press ᯤ in the control centre.
3. Press the required setting.
4. If required, press < to switch to the "Settings" appliance display.

15.7 Displaying the "Long-term timer" function with the Home Connect app

Requirement: The appliance is connected to Home Connect.
- ▸ Display or hide the "Long-term timer" function under "Settings" in the Home Connect app under "Additional settings".
- ✔ Under "Type of heating", the Home Connect app shows two options for the "Long-term timer" function.

Note: The appliance display shows the "Long-term timer" function under "Modes & Service".

15.8 Deactivate the "Long-term timer" function with programmed start time using the Home Connect app

Requirements
- The appliance is connected to Home Connect.
- A start time in the future is programmed on the appliance for the "Long-term timer" function.
- The programmed start time for the "Long-term timer" function has not yet been reached.
- ▸ Deactivate the "Long-term timer" function under "Settings" in the Home Connect app under "Additional settings".
- ✔ The "Long-term timer" function does not start.

15.9 Starting the "Long-term timer" function using the Home Connect app

The "Long-term timer" function is available in the Home Connect app. In the Home Connect app, you can start the "Long-term timer" function with "Hot air" or without a heating cycle. A time-delayed start and the configuration of multiple heating cycles is not possible via the Home Connect app.

Requirement: In the Home Connect app, the "Long-term timer" function is activated under "Additional settings".

→ *"Displaying the 'Long-term timer' function with the Home Connect app", Page 31*

1. Under "Type of heating", select the "Long-term timer" function with "Hot air" or without a heating cycle.
2. Press "Next".
3. For a heating cycle with "Hot air", select the temperature and press "Next".
4. Select the time period.
5. Press "Done".
6. Press "Start".

15.10 Software update

Your appliance's software can be updated using the software update function, e.g. for the purposes of optimisation, troubleshooting or security updates.
To do this, you must be a registered Home Connect user, have installed the app on your mobile device and be connected to the Home Connect server.
As soon as a software update is available, you will be informed via the Home Connect app and will be able to start the software update via the app. Once the update

has been successfully downloaded, you can start installing it via the Home Connect app if you are in your home network (Wi-Fi). The Home Connect app informs you once installation is successful.
You can find the current software version in the Home Connect app under the appliance information for the appliance.

Notes
- The software update consists of two steps.
  - The first step is the download.
  - The second step is the installation on your appliance.
- You can continue to use your appliance as normal while updates are downloading. Depending on your personal settings in the app, software updates can also be set to download automatically.
- Installation takes a few minutes. You cannot use your appliance during installation.
- We recommend that you install security updates as soon as possible.

15.11 Data protection

Please see the information on data protection.

The first time your appliance is registered on a home network connected to the Internet, your appliance will transmit the following types of data to the Home Connect server (initial registration):
- Unique appliance identification (consisting of appliance codes as well as the MAC address of the installed Wi-Fi communication module).
- Security certificate of the Wi-Fi communication module (to ensure a secure data connection).
- The current software and hardware version of your appliance.
- Status of any previous resetting to factory settings.

This initial registration prepares the Home Connect functions for use and is only required when you want to use the Home Connect functions for the first time.

Note: Please note that the Home Connect functions can only be utilised with the Home Connect app. Information on data protection can be retrieved in the Home Connect app.

16 Basic settings

You can configure the basic settings for your appliance to meet your needs.

16.1 Overview of the basic settings

Here you can find an overview of the basic settings and factory settings. The basic settings depend on the features of your appliance.

Symbol	Basic setting	Setting	Selection	Use
	Home network	WiFi	▪ On ▪ Off [1]	Switches the Wi-Fi on or off **Note:** The On and Off settings are only available if a connection to the Home Connect server has been established. All settings are retained after the appliance is switched off. Switch on the Wi-Fi in order to allow the appliance to be controlled via the app and to use additional appliance functions.
		Home Connect assistant	▪ During the initial connection to the Home Connect app: "Start" ▪ If you have already connected successfully to the Home Connect app: "Connect now"	Setting up Home Connect →*Page 30*

[1] Factory setting (may vary according to model)

Symbol	Basic setting	Setting	Selection	Use
		Remote start	▪ Off (monitoring only) ▪ Manual [1] ▪ Permanent **Note:** The settings are only available if you have selected the "On" setting for Wi-Fi.	Setting "Remote start" → *"Starting functions with the Home Connect app via manual 'Remote start'", Page 30*
		Network information	▪ MAC address ▪ Wi-Fi SSID ▪ IPv4 address ▪ IPv6 address **Note:** The settings are only available if you have selected the "On" setting for Wi-Fi.	Displaying "Network information"
		Network credentials reset	▪ Confirm The connections are reset. The appliance deletes saved network access data. **Note:** The settings are only available if you have selected the "On" setting for Wi-Fi.	Resetting the network access data
	Display	Brightness	▪ 1 ▪ 2 ▪ 3 ▪ 4 [1] ▪ 5 ▪ 6	Sets the brightness in stages
		Distant view	▪ "On" [1]: The display shows less content if you are at a greater distance. ▪ "Off": The display always shows the same content.	Switching the remote view on or off
		Screen in off-mode	▪ GAGGENAU logo"displayed on approach" [1] ▪ None	Sets the low power mode display →*Page 13*
		Ring behaviour	▪ "Standard": Press the required function and use the control ring to change the function ▪ "Quick selection" [1]: Use the control ring to change the function located above the control ring	Sets the control ring behaviour

[1] Factory setting (may vary according to model)

Symbol	Basic setting	Setting	Selection	Use
		Display child lock	▪ "On" [1]: The symbol for the "Display child lock" function is only visible in the status bar if the "Display child lock" function is active. Control ring and touch fields are locked. ▪ "Off": The "Display child lock" function cannot be activated.	Displaying or hiding the symbol for the child lock →*Page 23* in the control centre
		Door lock	▪ Activated ▪ Off [1]	Activates or deactivates the door lock **Note:** The door lock →*Page 14* prevents the appliance door from being opened accidentally. This is particularly useful when installing the appliance under the worktop.
		Display alignment	▪ Vertical [1] ▪ Horizontal	Aligns the display horizontally or vertically depending on the appliance's installation position or the user's body size
♫	Sounds	Switch-on/switch-off sounds	▪ Quiet ▪ Standard [1] ▪ Loud	Set the volume of the on/off tones
		Notification sounds	▪ Off ▪ Quiet ▪ Standard [1] ▪ Loud	Sets the volume of the notification tones **Note:** The notification tones for the warnings and error messages always remain switched on.
		Process sounds	Volume ▪ Off ▪ Quiet ▪ Standard [1] ▪ Loud "Repetitions": ▪ 1x ▪ "10 s": The appliance emits the signal tone repeatedly for 10 seconds. ▪ "30 s" [1]: The appliance emits the signal tone repeatedly for 30 seconds. ▪ "3 min": The appliance emits the signal tone repeatedly for 3 minutes.	▪ Set the volume of the process tones ▪ Set the required maximum duration of the process tones ▪ Activates or deactivates the process tone following preheating

[1] Factory setting (may vary according to model)

Symbol	Basic setting	Setting	Selection	Use
			"Preheating signal": ▪ "On" [1] ▪ Off	
		Visual feedback	▪ On ▪ Off [1]	Switches the pulsating light for programme end, notifications or error messages on or off
		Volume reduction	▪ "On": Lower the volume for all tones to a certain volume level in a defined period ▪ "Reduced": Lower the volume for all tones to the "Quiet" volume level in a defined period and switch off the tones for cleaning ▪ "Off" [1]: Switch off all tones in a defined period Start time ▪ "22h" [1] End time ▪ "7h" [1]	Sets the lowering of the volume **Note:** The signal tones for warnings, error messages and switching on and switching off always remain switched on.
	Interior lighting	Brightness	▪ Dark ▪ Standard [1] ▪ Bright	Sets the brightness of the interior lighting
		Activation	▪ Automatic [1] ▪ Manual	Switches the interior lighting →*Page 7* on automatically or manually
		Light interaction	▪ On [1] ▪ Off	Sets the light interaction **Note:** If you are outside of the range that the appliance recognises, the appliance reduces the interior lighting to what is essential.
	Notifications	Info-i	▪ On [1] ▪ Off	Displays or hides additional information **Tip:** If you press ❶, the display shows additional information →*Page 13*. If you switch off the function, the display does not show any symbols or any additional information.
		Pop-up hints	▪ On [1] ▪ Off	Displays or hides the pop-up notifications →*Page 14*

[1] Factory setting (may vary according to model)

Symbol	Basic setting	Setting	Selection	Use
	Language	-	▪ Deutsch ▪ French ▪ [...] ▪ English [1]	Setting the language
	Time & Units	Time	▪ Time [1] ▪ "Automatic": Select the "Automatic" option if your appliance is connected to Home Connect.	Setting the time
		Time format	▪ 12 ▪ 24 [1]	Set the time format
		Temperature unit	▪ °C [1] ▪ °F	Set the temperature unit
		Weight unit	▪ "Metric": "g/kg" ▪ "Anglo-american": "oz/lb"	Set the weight unit
		Volume unit	▪ "Metric": "ml/l" [1] ▪ "Anglo-american": "fl oz"	Setting the capacity unit
	Advanced	Display long-term timer	▪ On ▪ Off [1]	Displays or hides the "Long-term timer" function
		Demo mode	▪ On ▪ Off [1]	Activates or deactivates demo mode **Note:** The setting is only available in the first 3 minutes after connecting to the power supply.
		Factory settings	▪ Restore	Allows you to restore the appliance's factory settings **Note:** The appliance starts the initialisation. The display asks you to specify settings that the appliance installer has implemented.
	Appliance	Start screen	▪ Manual [1] ▪ Favourites ▪ Programmes	Select a display that shows the display after switching on
		Preselection heating methods	Overview of the available types of heating →*Page 11*.	Selects the preferred types of heating
			▪ On ▪ Off	▪ Selects the preferred type of heating that is available after the appliance is switched on ▪ If required, displays or hides additional types of heating at a later point **Note:** The sequence of the types of heating is defined.

[1] Factory setting (may vary according to model)

Symbol	Basic setting	Setting	Selection	Use
		Food preference	▪ Off [1] ▪ Vegetarian ▪ No meat & poultry ▪ No fish & seafood ▪ No pork ▪ Kosher	Selects the preferred food for automatic programmes and setting recommendations
		Count-up cooking timer	▪ On [1] ▪ Off	Sets the count-up cooking timer **Note:** The running cooking time is automatically counted up if no cooking time has been stored.
		User detection	"Behaviour": ▪ Automatic ▪ "Below 1.2 m"- "Below 0.1 m" "Installation height": ▪ Under 91.4 cm/36" ▪ Between 91.4 cm/36" and 150 cm/59" [1] ▪ Over 150 cm/59"	▪ Sets the distance from which the proximity sensor detects the user ▪ Sets the appliance's installation height **Note:** To ensure that the proximity sensor optimally detects the user, store the installation height of the appliance's upper edge.
		Introduction to the appliance	Start	Starting the appliance introduction **Note:** The appliance introduction contains a short description of the basic functions.

16.2 Changing the basic settings

1. Swipe repeatedly from left to right until the display shows Basic settings →*Page 32*.

✔ The display shows the symbols for the available settings in a ring menu.

2. Use the control ring to select the required basic setting.
3. Press the required basic setting.

✔ The display shows the settings for the selected basic setting.

4. Depending on the selected basic setting, use the control ring to select the setting or press the required setting.
   ▸ With a list menu, ensure that the required setting is above the horizontal line.
5. Use ⇄ to activate the setting or use the control ring to select the setting option and press the setting.
6. If required, use < to switch to the previous view.

17 Cleaning and servicing

17.1 Cleaning products

To avoid damaging the various surfaces on the appliance, do not use any unsuitable cleaning agents.

⚠ **WARNING – Risk of electric shock!**
An ingress of moisture can cause an electric shock.
▸ Do not use steam- or high-pressure cleaners to clean the appliance.

⚠ **WARNING – Risk of burns!**
The appliance and its parts that can be touched become hot during use.
▸ Caution should be exercised here in order to avoid touching heating elements.
▸ Young children under 8 years of age must be kept away from the appliance.

[1] Factory setting (may vary according to model)

⚠ **WARNING – Risk of injury!**
Scratched glass in the appliance door may develop into a crack.
- Do not use any harsh or abrasive cleaners or sharp metal scrapers to clean the glass on the appliance door, as they may scratch the surface.

ATTENTION
Unsuitable cleaning agents damage the surfaces of the appliance.
- Do not use harsh or abrasive cleaning products.
- Do not use cleaning products with a high alcohol content.
- Do not use hard scouring pads or cleaning sponges.
- Do not use any special cleaners for cleaning the appliance while it is hot.

Salt contained in new sponge cloths may damage surfaces.
- Wash new sponge cloths thoroughly before use.

Using oven cleaner in a hot cooking compartment damages the stainless steel surfaces.
- Never use oven cleaner in the cooking compartment when it is still warm.
- Remove all food remnants from the cooking compartment and the appliance door before you next heat up the appliance.

⚠ **WARNING – Risk of fire!**
Loose food remnants, fat and meat juices may catch fire.
- Remove coarse dirt from the cooking compartment and from the accessories.

Suitable cleaning agents

Only use cleaning agents that are suitable for the different surfaces on your appliance.

Appliance door

Range	Suitable cleaning agents	Information
Door panel	▪ Glass cleaner	Do not use a glass scraper. Clean it using a soft cloth or a microfibre cloth.
Door seal	▪ Hot soapy water	Clean with a dishcloth. Do not remove or scrub. Do not use metal scrapers or glass scrapers for cleaning.
Control ring	▪ Soapy water	Clean with a slightly damp soft cloth. Do not spray with any cleaning agent.

Cooking compartment

Range	Suitable cleaning agents	Information
Cooking compartment inner walls	▪ Hot soapy water	Clean with a dishcloth and dry with a soft cloth. Stainless steel cleaner that is suitable for the appliance can be obtained from customer service or online. To prevent corrosion, remove any patches of limescale, grease, starch or albumin (e.g. egg white) from stainless steel surfaces immediately. Corrosion may form under such stains. Do not use oven spray or other aggressive oven cleaners or abrasive materials. Scouring pads, rough sponges and pan cleaners are unsuitable. These items scratch the surface. Always dry the cooking compartment after cleaning. → *"Rapid drying", Page 40* **Note:** Undissolved detergent causes patches to appear when heating up and these patches cannot be removed. Thoroughly remove residues from detergents or care products using clean water before drying the cooking compartment.
Lightly soiled cooking compartment	▪ Cleaning aid	The cleaning aid →*Page 39* loosens stubborn dirt in the cooking compartment and makes cleaning easier.
Very dirty cooking compartment	▪ Cleaning gel spray for ovens	Cleaning gel spray for ovens can be obtained from customer service or from the online shop. ▪ Do not spray into the steam outlets on the back of the cooking compartment. ▪ The gel must not come into contact with the seals on the door or with the light. ▪ Leave this to work for no more than 12 hours. ▪ Do not use it on hot surfaces. ▪ Rinse off thoroughly with water. ▪ Observe the manufacturer's instructions.
Grilling surface	▪ Glass ceramic cleaner	Regularly clean with glass ceramic cleaner.

Range	Suitable cleaning agents	Information
		Do not use a glass scraper.
Grease filter	▪ Dishwasher ▪ Hot soapy water	Unhook the grease filter on the back wall of the cooking compartment to clean it. Do not scratch the back wall of the cooking compartment.
Glass cover for the cooking compartment light	▪ Hot soapy water	Clean with a dishcloth.
Water tank	▪ Hot soapy water ▪ Dishwasher	To remove residual detergent after cleaning, rinse thoroughly with clean water. Clean in the dishwasher as necessary. Remove the lid and place the water tank upside down in the dishwasher. **Note:** Before fitting the lid, ensure that the suction hose is free of residues. → *"Check the water tank", Page 45* After cleaning, leave the water tank to dry with the lid open.
Wire racks	▪ Dishwasher ▪ Hot soapy water	**Note:** If required, remove the shelf supports for cleaning. → *"Removing the shelf supports", Page 42* In the event of heavy soiling, leave to soak and use a brush.
Cooking container, wire rack	▪ Dishwasher ▪ Hot soapy water	Soak burnt-on remnants and remove with a brush. Light-coloured patches on stainless steel are caused by protein residues. Remove these stains with lemon juice. Rinse thoroughly with clean water.
Core temperature probe	▪ Hot soapy water	Wipe with a damp cloth Do not clean in the dishwasher.

17.2 Microfibre cloth

The honeycomb microfibre cloth is especially suitable for cleaning easily damaged surfaces, such as glass, glass ceramic, stainless steel or aluminium. The microfibre cloth removes liquid and greasy deposits in one go.
The microfibre cloth can be obtained from customer service or from the online shop.

17.3 Cleaning the drain filter

1. If necessary, clean the strainer filter.
   When cooking fish or meat, we recommend cleaning the appliance after each use.
2. Turn the drain filter in the cooking compartment floor anticlockwise ① and remove it ②.

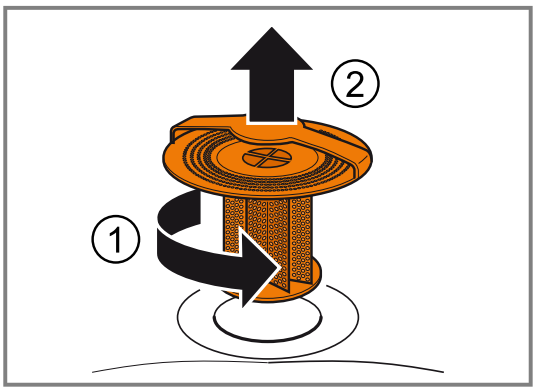

3. Remove any food remnants from the strainer filter.

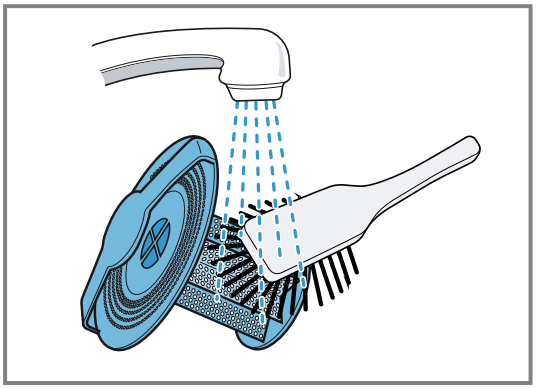

4. If it is very dirty, rinse out the strainer filter under running water or clean it in the dishwasher.
5. Insert the strainer filter and turn it clockwise as far as it will go.

Note: Never operate the appliance without the strainer filter in place.

17.4 Cleaning aid

The cleaning aid loosens stubborn dirt in the cooking compartment and makes cleaning easier.
Always allow the cleaning aid to run to the end. You cannot cancel the cleaning aid.

Preparing the cleaning aid

Requirement: The interior temperature is below 40 °C.
1. Remove all accessories from the cooking compartment.
2. Remove the shelf supports from the cooking compartment. →*Page 42*

3. Clean the accessories and side shelf supports separately.
4. Unhook the supplied grease filter →*Fig. ⁄ 3* from the back wall of the cooking compartment to clean it.
   ▸ Do not scratch the back wall of the cooking compartment.
5. Clean the grease filter separately.
6. Wipe out any coarse dirt.
7. Spray and wipe out the cooking compartment with a cleaning agent.
8. Remove both water tanks.
9. Fill the fresh-water tank with cold water up to the "Max." mark.
10. Slide both water tanks as far as they will go into the appliance.
11. Close the appliance door.

Starting the cleaning aid

Note: The appliance takes you through the necessary steps.

1. Swipe repeatedly from left to right until the display shows "Modes & Service".
✔ The display shows the available functions in a list menu.
2. Use the control ring to select the "Cleaning aid" function.
3. Press "Cleaning aid" in the list menu.
4. Switch to the next window with →.
5. Press ▸ to start.
✔ The cleaning time counts down.
✔ The light in the cooking compartment remains switched off.
✔ An audible signal will sound once the cleaning time has elapsed.
✔ The display shows a message.
6. Wipe out the cooking compartment.
7. Clean the strainer filter.
8. Empty and clean the water tank and leave it to dry with the lid open.
9. Wipe the cooking compartment dry with a soft cloth.
10. Before using the oven again, remove any detergent residue from the cooking compartment.
11. Fit the grease filter. →*Fig. ⁄ 3*
12. Fit the shelf supports. →*Page 42*
→ *"Fitting the shelf supports", Page 42*

Note: If the cleaning aid was cancelled due to a power cut, it must be restarted before using the oven again in order to remove any detergent residues from the appliance.

Fitting the grease filter

▸ Hook the enclosed grease filter →*Page 7* onto the two bolts on the back wall of the cooking compartment.
   ▸ Do not scratch the back wall of the cooking compartment.

17.5 Rapid drying

You can use the "Rapid drying" function to dry the cooking compartment quickly after cleaning or steaming.

ATTENTION
Heat damages the water tank.
▸ Do not dry the water tank in the hot cooking compartment.

The "Rapid drying" function lasts 15 minutes.

Start "Rapid drying"

Requirement: The appliance door is closed.

1. Swipe repeatedly from left to right until the display shows "Modes & Service".
✔ The display shows the available functions in a list menu.
2. Use the control ring to select the "Rapid drying" function.
3. Press "Start".
4. If required, change the end time for the drying time.
   ▸ Use the control ring to change the end time for the drying time.
5. Switch to the next window with →.
6. Follow the instructions in the notification texts.
7. Press ▸ to start.
✔ The display shows 15 minutes for the drying time and 180 °C.
✔ If you have selected the start of the drying time, the display shows ⇥ and the time for the start of the drying time.
✔ The display shows the drying time that has elapsed.
✔ The interior lighting remains switched off.
✔ A signal tone sounds after 15 minutes.
✔ The display shows a message.
✔ The "Rapid drying" has finished.
8. Press ✓ to confirm.
✔ The display shows the start screen.
9. Allow the appliance to cool down.
10. Polish the cooking compartment and door pane with a soft cloth.

Ending "Rapid drying"

▸ Press ■.
✔ The appliance ends the "Rapid drying" function.

17.6 Descaling programme

You can use the descaling programme to descale the appliance fully automatically. If you descale the appliance regularly, your appliance will be in a good condition.

ATTENTION
Limescale may damage the appliance.
▸ Descale the appliance regularly.
Using the wrong descaler may damage the appliance.
▸ Only use the specified descaling tablets.
The descaling tablet may damage the cooking compartment.
▸ Use the descaling tablet for the descaling programme only.
▸ Place the descaling tablet into the water tank.
▸ Never place the descaling tablet in the cooking compartment or heat it up in the cooking compartment.

The descaling tablets can be obtained from customer service, our website or the online shop.
Depending on the water hardness and the use of the appliance, a message on the display reminds you to run the descaling programme.

To prevent damage to the appliance, the appliance locks the operating modes that use steam after this message has been repeated. You can still use the appliance to run operating modes that do not require steam. You can only use the appliance without any restrictions after you have run the descaling programme.
The descaling programme takes 1 hour 50 minutes from beginning to end. After 1 hour 30 minutes, empty, clean and refill the water tank.

Activating and preparing the descaling programme

1. Swipe repeatedly from left to right until the display shows "Modes & Service".
✔ The display shows the available functions in a list menu.
2. Use the control ring to select the "Automatic descaling" function.
You cannot cancel the descaling programme. Always allow the descaling programme to run to the end.
3. Move the switch to "On".
4. Follow the instructions in the notification texts.
5. Use the control ring to select "End time".
6. Press the preset end time.
7. Use the control ring to change the end time for the descaling.
8. Press <.
✔ The end time for the descaling has been set.
9. Remove all accessories from the cooking compartment.
10. Empty the waste-water tank.
11. Remove the fresh-water tank from the appliance and take off the lid.
12. Remove the descaling tablet from the plastic packaging.
13. Place the descaling tablet in the compartment at the back of the fresh-water tank.

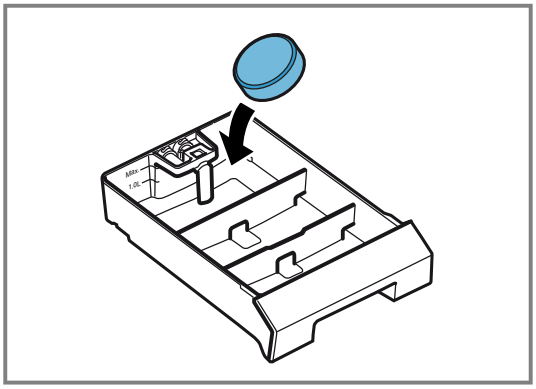

14. Position the lid on the fresh-water tank and click it into place.
15. Fill the fresh-water tank up to the "Max" mark with 1.7 l cold water.

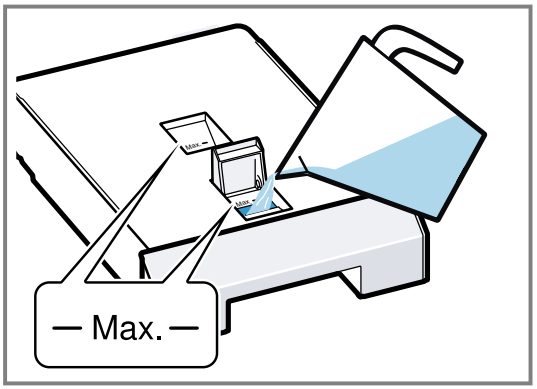

16. Slide the fresh-water tank back in as far as it will go.

Starting the descaling programme

1. Close the appliance door.
2. Use ✓ to confirm the last notification.
3. Press ▶ to start.
✔ The display shows the descaling time of 1.5 hours.
✔ The descaling time counts down on the display.
✔ If you have selected a switch-off time, the switch-off time counts down on the display.
✔ The light in the cooking compartment remains switched off.
✔ After approx. 1 hour 30 minutes, the display shows a message.
4. Clean the water tanks.
5. Fill the fresh-water tank with 1.7 l cold water and insert it into the appliance.

Continuing the descaling programme

⚠ **WARNING – Risk of chemical burns!**
The descaling solution may cause chemical burns in the mouth, throat and eyes or on the skin.
- Avoid the skin coming into contact with the descaling solution.
- Keep children away from the descaling solution.
- Do not drink the descaling solution.
- The descaling solution must not come into contact with food.
- Clean the water tank in the dishwasher or thoroughly by hand before you next use the appliance.

Requirement: The display shows a message that the appliance has cancelled the programme.
1. Empty the waste-water tank.
2. Thoroughly clean the waste-water tank and insert it into the appliance.
3. Clean the fresh-water tank thoroughly.
4. Fill the fresh-water tank with 1.7 l cold water and insert it into the appliance.
5. Press →.
✔ The appliance starts the rinsing process.
6. Follow the instructions in the notification texts and press →.
✔ Once the descaling programme has ended, a signal tone sounds.
7. Use ✓ to confirm the last notification.
8. Clean the water tanks.

Cleaning the water tanks

Once the descaling programme has finished, remove any descaler residues from the fresh-water tank and waste-water tank.

1. Remove the fresh-water tank and waste-water tank from the appliance.
2. Remove the tank lids.
3. Clean the fresh-water tank, waste-water tank and tank lids in the dishwasher or thoroughly by hand.

17.7 Removing the shelf supports

1. Place a dishcloth in the cooking compartment to protect the stainless steel from scratches.
2. Undo the knurled nuts.

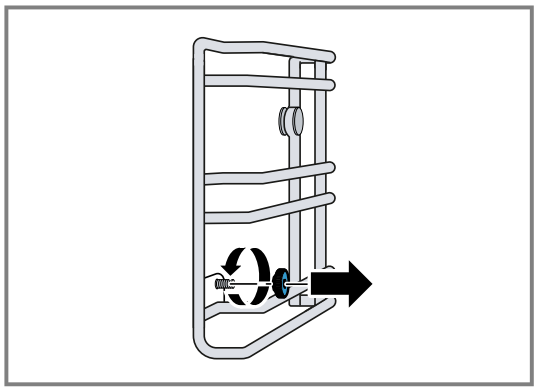

3. Lift the shelf supports slightly sideways away from the screw ① and pull them out towards the front ②.

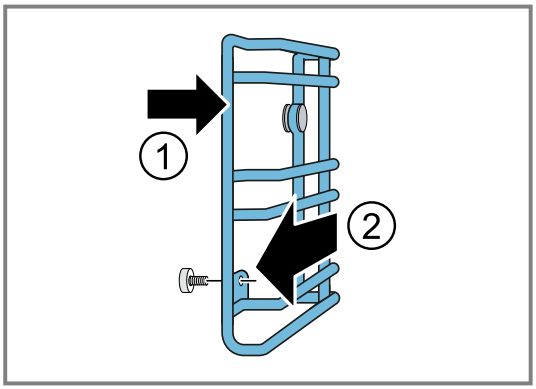

4. Clean the shelf supports in hot soapy water or in the dishwasher.

17.8 Fitting the shelf supports

ATTENTION

Incorrect spare parts may lead to corrosion in the cooking compartment.

- Only use the original knurled nuts.

1. Fit the shelf supports on the correct side of the cooking compartment.
   The shelf supports for the left and right side of the cooking compartment are different.
2. Slide the back of the shelf supports onto the bolts and attach them at the front.
3. Tighten the knurled nuts.

Note: If you lose a knurled nut, you can order this as a spare part from our customer service.

18 Troubleshooting

You can rectify minor faults on your appliance yourself. Read the troubleshooting information before contacting after-sales service. This will avoid unnecessary costs.

Tip: Permanently connect your appliance to the Home Connect app to automatically receive software updates. This allows errors to be eliminated, performance to be improved and new functions to be made available.

⚠ **WARNING – Risk of injury!**

Improper repairs are dangerous.

- Repairs to the appliance should only be carried out by trained specialist staff.
- If the appliance is defective, call Customer Service.
  → *"Customer Service", Page 49*

⚠ **WARNING – Risk of electric shock!**

Improper repairs are dangerous.

- Repairs to the appliance should only be carried out by trained specialist staff.
- Only use genuine spare parts when repairing the appliance.
- If the power cord or the appliance power cable of this appliance is damaged, it must be replaced with a special power cord or special appliance power cable, which is available from the manufacturer or its Customer Service.
- If the power cord of this appliance is damaged, it must be replaced by trained specialist staff.

18.1 Malfunctions

Fault	Cause and troubleshooting
The appliance is not working.	The mains plug of the power cord is not plugged in. ▸ Connect the appliance to the power supply.

Fault	Cause and troubleshooting
The appliance is not working.	The circuit breaker in the fuse box has tripped. ▸ Check the circuit breaker in the fuse box.
	There has been a power cut. ▸ Check whether the lighting in your room or other appliances are working.
	Operating error. ▸ Switch off the circuit-breaker for the appliance in the fuse box and switch it back on after approx. 60 seconds.
The appliance does not work. Display shows "Appliance locked. Descaling required."	Build-up of limescale in the appliance. ▸ Start the descaling programme →*Page 40*.
Despite descaling, "Please descale" appears on the display.	Build-up of limescale in the appliance, incorrect descaler used. **1.** Use the specified descaling tablets. **2.** Start the descaling programme →*Page 40*.
The appliance does not start.	The appliance door is not fully closed. ▸ Close the appliance door.
The appliance cannot be started via the Home Connect app.	The appliance is not connected to the Home Connect app. ▸ Start the connection between the appliance and the Home Connect app. → *"Setting up Home Connect", Page 30*
	The appliance is connected to the Home Connect app but the remote control function is not activated. ▸ Activate the remote control function in the Home Connect settings →*Page 30*.
The appliance does not work. The display shows E5117.	The appliance does not receive water. **1.** Check the water tank. →*Page 45* **2.** If the display shows the error message again, contact customer service →*Page 49*.
The appliance does not work. The display does not respond. The display shows the symbol for the childproof lock 🔒.	Childproof lock is activated. ▸ Deactivate the childproof lock. →*Page 24*
The appliance automatically switches off.	Safety switch-off function: No operation for more than 12 hours. **1.** Press ✓ to confirm the message. **2.** Switch off the appliance.
The appliance does not heat up; the display shows the symbol for demo mode.	The appliance is in demo mode. ▸ Deactivate the demo mode in the basic settings →*Page 32*.
The appliance cannot be started; the display shows a message.	The water tank is empty. ▸ Fill the water tank. → *"Fill the water tank", Page 17*
The display always shows the orange ring behind the control ring, even if you are not touching the control ring.	During cleaning, too much moisture got behind the control ring. **1.** Wait until the moisture has evaporated. **2.** If necessary, wait a few hours until the moisture has evaporated.
The display never shows the orange ring behind the control ring, even if you touch the control ring.	During cleaning, too much moisture got behind the control ring. **1.** Wait until the moisture has evaporated. **2.** If necessary, wait a few hours until the moisture has evaporated.
No steam is visible.	Water vapour above 100 °C is not visible. ▸ This is normal. No action required.
Powerful steam release at the top of the door.	You have changed the operating mode. ▸ This is normal. No action required.
Powerful steam release at the side of the door.	The door seal is dirty or loose. **1.** Clean the door seal. **2.** Insert the door seal into the groove.
Humming noise when switching on.	The drain pump starts running. ▸ Normal operating noise No action required.

Fault	Cause and troubleshooting
Humming noise when switching on.	The appliance has been switched off for a few days. Automatic rinsing during initial use. ▸ Normal: Automatic rinsing during initial use. No action required.
A whistling noise occurs during heating.	Noises may occur during steam generation. ▸ This is normal. No action required.
A "plop" sound can be heard during cooking.	Voltage expansion when the temperature difference is large. ▸ This is normal. No action required.
Steaming is not possible.	Build-up of limescale in the appliance. The appliance must be descaled to avoid damage to the appliance. ▸ Start the descaling programme →*Page 40*.
The appliance is no longer producing steam correctly.	Build-up of limescale in the appliance. ▸ Start the descaling programme →*Page 40*.
The lighting does not work.	The lighting is defective. **1.** Unplug the appliance from the mains. **2.** Reinsert the mains plug after 10 seconds. **3.** Check whether the "Automatic" setting is selected under "Settings" for the "Interior lighting" basic setting under the "Activation" setting. → *"Changing the basic settings", Page 37* ▸ If the fault cannot be eliminated, inform after-sales service.
The waste-water tank cannot be removed.	The waste-water tank remains locked for a short time after cooking has finished. ▸ Wait until the appliance opens the lock.
Water drips out when you open the appliance door.	The collecting channel on the underside of the door panel is full. ▸ Dry the collecting channel with a sponge.
An unpleasant smell occurs during heating.	The appliance is new. ▸ Before using it for the first time, heat the appliance at 60% humidity and 200 °C for one hour.

18.2 Information on display panel

Fault	Cause and troubleshooting
The display shows "Empty left-hand water tank" even though you inserted the left-hand water tank while it was empty.	The side panel of the water tank is dirty. **1.** Clean and empty the water tank. **2.** Insert the water tank into the appliance.
	There is water, dirt or limescale in the insertion shaft. ▸ Clean and dry the insertion shaft.
Display shows .	The water tank is not OK. **1.** Press . **2.** Refer to the instructions on the display.
Display shows "Cleaning aid programme terminated. Wipe out the cooking compartment. Remove undissolved detergent."	The appliance was switched off during the cleaning aid programme or the power supply was disconnected. **1.** Fill the water tank. **2.** Wipe out the cooking compartment. **3.** Restart the cleaning aid programme. → *"Starting the cleaning aid", Page 40*
The display shows the error message "Exx".	An error occurred. **1.** If the display shows an error message, press . ✔ If the display no longer shows the error message, it was a one-off problem. **2.** If the display continues to show or repeatedly shows the error message, contact customer service →*Page 49* and provide them with the error code.

18.3 Power failure

In the event of a power failure, your appliance will switch off.
A power failure will interrupt the ongoing cooking process. The display shows a message.

Switch the appliance back on again after a power failure

1. Press .
2. Switch the appliance back on again as usual.

18.4 Check the water tank

1. Remove the right-hand water tank.
2. Remove the tank lid.
3. Remove the suction hose [a] towards the rear of the water tank and clean it under running water.

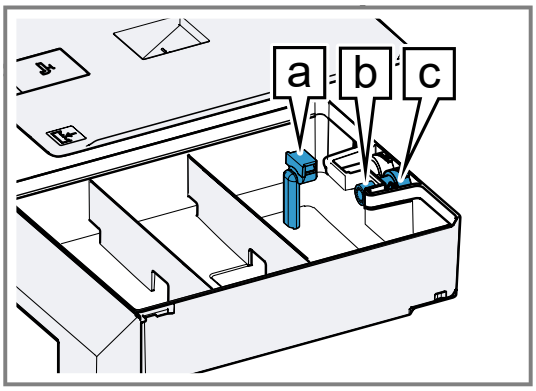

4. Check whether the suction hose is free of residues.
5. Check whether the filter [b] is free of residues at the discharge valve [c] towards the rear of the water tank.
6. Push the suction hose [a] on fully.
   ▸ Ensure that the suction hose is not kinked.

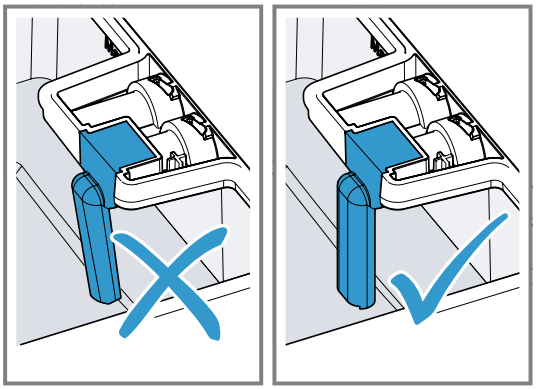

7. Fit the tank lid.

18.5 Demo mode

If the display shows ✂, demo mode is activated. The appliance does not heat up.

Deactivating demo mode

1. To briefly disconnect the appliance from the mains, switch off the household fuse or the circuit breaker in the fuse box.
2. Deactivate demo mode within 3 minutes in the basic settings →*Page 32*.

19 Disposal

19.1 Disposing of old appliance

Valuable raw materials can be reused by recycling.

1. Unplug the appliance from the mains.
2. Cut through the power cord.
3. Dispose of the appliance in an environmentally friendly manner.
   Information about current disposal methods are available from your specialist dealer or local authority.



This appliance is labelled in accordance with European Directive 2012/19/EU concerning used electrical and electronic appliances (waste electrical and electronic equipment - WEEE).
The guideline determines the framework for the return and recycling of used appliances as applicable throughout the EU.

20 How it works

Here, you can find the ideal settings for various types of food as well as the best accessories and cookware. We have perfectly tailored these recommendations to your appliance.
You can find recommended settings →*Page 26* for some meals in the display under Programmes →*Page 24* or in the Home Connect app.
The following overview only contains standard dishes for test purposes.

20.1 General cooking tips

Take note of the following information when cooking all types of food.

- The cooking times specified are intended as a guide. The actual cooking time depends on the quality and temperature of the food before cooking, as well as its weight and thickness.
- The values given refer to average quantities for 4 people. If you want to prepare a larger amount, expect a longer cooking time.
- Use the cookware specified. If you use other cookware, the cooking time may be longer or shorter.
- Always use plates, baking tins or ovenproof dishes with the wire rack.
- If you have not made a particular dish before, start with the shortest specified time. If required, you can continue to cook the food.
- Open the cooking compartment door on the preheated oven for a short time only and quickly place your food inside the appliance.
- When steaming, defrosting, dough proving and reheating, you can use up to 3 shelf levels at a time

(shelf levels 1, 2 and 3). This will not cause the flavour to transfer. You can therefore cook fish, vegetables and desserts at the same time. The specified cooking times may need to be extended for large quantities of food.
- If you are only baking on one level, use level 2. If you are baking on two levels at the same time, use levels 1 and 3.
- Ensure that the food does not lie against the cooking compartment, the grease filter or the back panel.
- The appliance door must shut properly. Keep the seal surfaces clean at all times.
- To ensure optimal steam circulation, do not position the racks and containers too closely.
- When cooking very cold foods and when cooking at high temperatures, the cooking container may deform. This deformation has no effect on the function. When the cooking container cools down again, it returns to its original shape.
- If the appliance is above 100 °C, allow the appliance to cool down before steaming. Otherwise, the high temperature causes the food to dry out.
- When steaming at temperatures up to 100 °C, no preheating is necessary. Place the food in the cold cooking compartment and then switch on the appliance.
- The estimated cooking time starts as soon as the cooking compartment reaches the selected temperature.
- Always preheat the appliance. This will produce the best cooking results. The cooking times specified refer to a preheated appliance.

20.2 Sous-vide cooking

When sous-vide cooking, you cook the food under a vacuum at low temperatures between 50 and 95 °C and at 100% steam.

⚠ **WARNING – Risk of harm to health!**
Due to the low sous-vide cooking cooking temperatures, there is a risk to health if you do not follow the instructions for use and hygiene instructions below.
- ▸ Use only fresh, good-quality food.
- ▸ Wash and disinfect your hands. Use disposable gloves or grill tongs.
- ▸ Take extra care when preparing critical food, such as poultry, eggs and fish.
- ▸ Always thoroughly rinse and/or peel fruit and vegetables where necessary.
- ▸ Always keep work surfaces and chopping boards clean. Use different chopping boards for different types of food.
- ▸ Maintain the cold chain. Only interrupt the cold chain briefly to prepare the food. Store vacuum-sealed food back in the refrigerator until it is ready to be cooked.
- ▸ The food is suitable for immediate consumption only. Once the food is cooked, consume it immediately. Do not store it after cooking. Do not store the food in the refrigerator either. The food is not suitable for reheating.

- Sous-vide cooking is a gentle, low-fat method of cooking meat, fish, vegetables and desserts. A vacuum-sealing machine uses heat to hermetically seal the food in a special heat-resistant cooking bag.
- The protective envelope retains the nutrients and flavours. The low temperatures and the direct heat transfer help you to achieve precisely controlled cooking in order to achieve the required cooking results. It is almost impossible to overcook the food.
- Use the portion sizes listed in the cooking table. For larger quantities and items, adjust the cooking time accordingly. The portions specified for fish, meat and poultry correspond to a single serving. The portions specified for vegetables and desserts correspond to servings for 4 people.
- You can cook on up to two levels. Slide the cooking containers in at levels 1 and 3 to achieve the best cooking results. If you are cooking on just one level, use level 2.
- When using the sous-vide cooking method, only use heat-resistant vacuuming bags designed for this purpose. Do not cook the food in the vacuuming bag in which you bought the food, e.g. portioned fish. These bags are not suitable for sous-vide cooking.
- To ensure an even transfer of heat and a perfect cooking result, use a chamber vacuum-sealing machine that can create a 99% vacuum when vacuum-sealing food.
- With the "Sous-vide cooking" type of heating, it is not possible to postpone the end of the cooking time for hygiene reasons.

Vacuum-sealing

When vacuuming, heat-seal the food in a special plastic bag so that it is airtight.

Note the following points when vacuum-sealing:
- There is no/hardly any air in the vacuum-sealing bag.
- The heat-sealed seam is perfectly sealed.
- The vacuum-sealing bag has no holes in it. Do not use a core temperature probe.
- Pieces of meat or fish that have been vacuum-sealed together are not pressed directly against one another.
- You have vacuum-sealed vegetables and desserts as flat as possible.

Before cooking the food, check whether the vacuum in the bag is intact.
If in doubt, place the food into a new bag and vacuum-seal it again. Vacuum-seal food no more than one day before the cooking process. This is the only way to prevent the escape of gases from the food (e.g. from vegetables) which inhibit the transfer of heat, or to prevent the texture of the food from changing, and thus altering how it cooks, as a result of the vacuum pressure.

Quality of the food

The quality of the cooking result is 100% influenced by the quality of the ingredients you use.
Use only fresh, top-quality food. This is the only way to guarantee a consistent cooking result that delivers impeccable flavour.

Cooking

Sous-vide cooking prevents flavours from escaping, intensifying the food's natural flavour. Note that the usual quantities of seasoning and condiments, such as herbs, spices and garlic, will have a much greater effect on the flavour. Start off by halving the quantities you usually use.

If the ingredients are of high quality, it is often sufficient to enclose them in the bag with just a small knob of butter and a little salt and pepper. Generally, the fact that the food's natural flavours intensify during cooking is sufficient on its own to produce a flavourful cooking result.
Do not place the vacuum-sealed food items on top of one another or too close together in the cooking containers. In order to ensure even heat distribution, make sure that you do not touch the food. If you have more than one vacuum-sealing bag, cook on two levels.
Remove the vacuum-sealing bags with care after cooking, as hot water accumulates on the bags. Place the unperforated cooking container into the cooking compartment at the level below the perforated cooking container containing the hot food.
Dry the outside of the bag, place it into a clean, unperforated cooking container and cut it open with scissors. Place all of the food, along with its juices, into the cooking container.

The food can be finished off as follows once the sous-vide cooking stage is complete:

- Vegetables: Flash fry in a frying pan or on the teppan yaki to give them the flavours you would expect from frying. In doing so, you can effortlessly season the vegetables or mix them with other ingredients without the vegetables cooling down.
- Fish: Season and coat with hot butter. Since many types of fish fall apart easily after cooking using the sous-vide method, if you want to flash fry fish, this should be done before the sous-vide cooking stage. Fry the food for longer if has not been sufficiently well cooked during the sous-vide cooking stage.
- Meat: Flash fry at a very high temperature for a few seconds only on each side. This gives the meat a nice crust and the flavours you would expect from frying, without overcooking it. You can achieve a particularly good result using a teppan yaki or under the grill.

Note: Dab the meat with a tea towel before placing it into hot oil, in order to avoid fat spitting out of the pan.

Serve the food on pre-heated plates and, if possible, with a hot sauce or butter as sous-vide cooking takes place at relatively low temperatures.

20.3 Preparing bulky food

Recommendation for preparing bulky food.

- To prepare bulky food items, you can remove the shelf supports.
- To do this, undo the knurled nuts at the front of the slide-in racks, and pull the slide-in racks out towards the front.
- Place the rack directly onto the bottom of the cooking compartment and place the food or roaster onto the rack. Do not place the food or roaster directly onto the bottom of the cooking compartment. If required, remove the shelf supports. →*Page 42*

20.4 Tips for keeping acrylamide levels to a minimum when cooking

General information

- Keep cooking times as short as possible.
  Cook food until it is golden brown, but not too dark.
  Use large, thick pieces of food. Cooking produces less acrylamide.

Baked goods

- Set the temperature for hot air to max. 180 °C.

Biscuits

- Brush biscuits with egg or egg yolk. This reduces the production of acrylamide.
  Spread out a single layer evenly on the baking tray.

Oven chips

- Spread the chips out evenly and in a single layer on the baking tray.
  Cook at least 400 g at once on a baking tray so that the chips do not dry out.

20.5 Test dishes

These overviews have been produced for test institutes to facilitate appliance testing in accordance with EN 60350-1:2013 or IEC 60350-1:2011 and EN 60705:2012, IEC 60705:2010.

Cooking with steam

Food	Accessory/ cookware	Shelf position	Temperature in °C	Type of heating	Humidity in %	Cooking time in min.	Comments
Broccoli, in florets, in accordance with EN 60350-1	Perforated steaming tray	2	90	100%	100	20-25	
Peas, frozen, in accordance with EN 60350-1, 3 kg	Perforated steaming tray	2	100	100%	100	35-45	

Grilling

Food	Accessory/ cookware	Shelf position	Temperature in °C	Type of heating	Humidity in %	Cooking time in min.	Comments
Hamburgers, 125 g, in accordance with EN 60350-1	Wire rack or Unperforated steam container	2	230		-	12-15 on each side	Preheat the appliance for 5 minutes.
Toast in accordance with EN 60350-1	Wire rack	1	230		-	7-8	Preheat the appliance for 5 minutes.

Baking

Food	Accessory/ cookware	Shelf position	Temperature in °C	Type of heating	Humidity in %	Cooking time in min.	Comments
Apple cake, in accordance with EN 60350-1	20 cm springform cake tin	2	160	0%	0	110	
Small cakes, in accordance with EN 60350-1	Unperforated steam container	2	160	0%	0	25-30	
Small cakes, in accordance with EN 60350-1	Perforated steaming tray	1+2	150	0%	0	35-40	Use level 1 and level 2.
Viennese whirls, in accordance with EN 60350-1	Unperforated steam container	2	140	0%	0	50	
Viennese whirls, in accordance with EN 60350-1	Perforated steaming tray	1+3	140	0%	0	50	Use level 1 and level 3.

21 Information regarding Free and Open Source Software

This product includes software components that are licensed by the copyright holders as free software or open source software.
The applicable licence information is stored on your home appliance. You can also access the applicable licence information via your Home Connect app: "Profile -> Legal information -> Licence Information".[1] You can also download the licence information on the brand product website. (Please search on the product website for your appliance model and additional documents). Alternatively, you can request the relevant information from ossrequest@bshg.com or BSH Hausgeräte GmbH, Carl-Wery-Str. 34, 81739 Munich, Germany.
The relevant source code will be made available on request.
Please send your request to ossrequest@bshg.com or BSH Hausgeräte GmbH, Carl-Wery-Str.34, 81739 Munich, Germany.
Subject: „OSSREQUEST“
The cost of performing your request will be charged to you. This offer is valid for three years from the date of purchase or at least as long as we offer support and spare parts for the relevant appliance.

[1] Depending on the appliance specifications

22 Customer Service

Function-relevant genuine spare parts according to the corresponding Ecodesign Directive can be obtained from Customer Service for a period of at least 10 years from the date on which your appliance was placed on the market within the European Economic Area. Furthermore, our Customer Service will continue to provide you with other function-relevant and storable genuine spare parts for up to 15 years from the date on which your appliance was placed on the market.
For more information, please contact our Customer Service team.

Note: Under the terms of the manufacturer's warranty the use of Customer Service is free of charge.

Detailed information about the warranty period and the warranty conditions in your country is available via the QR code on the enclosed document on service contacts and warranty conditions, from our customer service or on our website.
You can find the contact details for our customer service via the QR code on the enclosed document on service contacts and warranty conditions or on our website.
This product contains light sources from energy efficiency class F. These light sources are available as a spare part and should only be replaced by trained specialist staff.

You can find the information required as per Regulations (EU) 65/2014, (EU) 66/2014 and (EU) 2023/826 online at *www.gaggenau.com* on the product and service pages for your appliance, in the area of user manuals and additional documents.

22.1 Product number (E-Nr.), production number (FD) and consecutive numbering (Z-Nr.)

If you contact Customer Service, you will require the product number (E-Nr.), the production number (FD) and the consecutive numbering (Z-Nr.), which you can find on the appliance's rating plate.
You will see the rating plate with these numbers if you open the appliance door.



Make a note of your appliance's details and the Customer Service telephone number to find them again quickly.

23 Declaration of Conformity

BSH Hausgeräte GmbH hereby declares that the appliance with Home Connect functionality conforms to the essential requirements and other relevant provisions of Directive 2014/53/EU.
A detailed RED Declaration of Conformity can be found online at *www.gaggenau.com* among the additional documents on the product page for your appliance.

CE

Hereby, BSH Hausgeräte GmbH declares that the appliance with Home Connect functionality is in compliance with relevant statutory requirements. [1]
A detailed Declaration of Conformity can be found online at *www.gaggenau.com/gb* among the additional documents on the product page for your appliance. [1]

UK CA

2.4 GHz band (2400–2483.5 MHz): Max. 100 mW
5-GHz band (5150–5350 MHz + 5470–5725 MHz): max. 150 mW

	BE	BG	CZ	DK	DE	EE	IE	EL	ES
	FR	HR	IT	CY	LI	LV	LT	LU	HU
	MT	NL	AT	PL	PT	RO	SI	SK	FI
	SE	NO	CH	TR	IS	UK (NI)			
5 GHz WLAN (Wi-Fi): For indoor use only.									

AL	BA	MD	ME	MK	RS	UK	UA
5 GHz WLAN (Wi-Fi): For indoor use only.							

[1] Only applies to Great Britain

23.1 Statement of Compliance for Great Britain

Product type
This statement of compliance covers the products described in this information for use whose model identifier group is seen on the title page. The full model identifier is made up of the characters before the slash in the product number (E no.) which can be found on the rating plate. Alternatively, you can also find the model identifier in the first line of the UK Energy Label.

Name and address of manufacturer
BSH Hausgeräte GmbH, Carl-Wery-Strasse 34, 81739 München, Germany

This statement of compliance is prepared by the manufacturer.

The manufacturer, BSH Hausgeräte GmbH deems that it has complied with

- provision 5.1-1 of ETSI EN 303 645 v2.1.1 and, where relevant, provision 5.1-2 of ETSI EN 303 645 v2.1.1;
- provision 5.2-1 of ETSI EN 303 645 v2.1.1;
- provision 5.3-13 of ETSI EN 303 645 v2.1.1.

Support period
BSH Hausgeräte GmbH will provide security updates that are necessary to maintain the main functions free of charge until at least 28/02/2034.

24 Installation instructions

Observe this information when installing the appliance.



24.1 General installation instructions

Follow these instructions before you start installing the appliance.

⚠ WARNING – Risk of fire!
It is dangerous to use an extended power cord and non-approved adapters.

- ▸ Do not use extension cables or multiple socket strips.
- ▸ Only use adapters and power cords approved by the manufacturer.
- ▸ If the power cord is too short and a longer one is not available, please contact an electrician to have the domestic installation adapted.

⚠ WARNING – Risk of injury!
The appliance is heavy.

- ▸ To move the appliance, two people are required.
- ▸ Use only suitable tools and equipment.

Sharp-edged parts may be accessible during installation.

- ▸ Wear protective gloves.

ATTENTION
Carrying the appliance by the appliance frame may cause it to bend. The appliance frame cannot support the weight of the appliance.

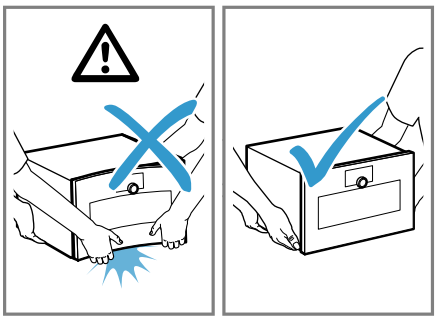

- ▸ Do not lift the appliance using the appliance frame.
- ▸ Always lift the appliance at the casing.

⚠ WARNING – Risk of electric shock!
Incorrect installation is dangerous.

- ▸ Connect and operate the appliance only in accordance with the specifications on the rating plate.
- ▸ Connect the appliance to a power supply with alternating current only via a properly installed socket with earthing.
- ▸ The protective conductor system of the domestic electrical installation must be properly installed.
- ▸ Never equip the appliance with an external switching device, e.g. a timer or remote control.
- ▸ When the appliance is installed, the mains plug of the power cord must be freely accessible. If free access is not possible, an isolating switch must be integrated into the permanent electrical installation according to the installation regulations.
- ▸ When installing the appliance, check that the power cable is not trapped or damaged.

ATTENTION
Surface damage caused by pulling or pushing the appliance.
- ▸ Do not pull or push the appliance; lift it instead.
- ▸ Place a tea towel under the appliance.

- Read this instruction manual carefully.
- The safe operation of this appliance can only be guaranteed if it has been installed to a professional standard in accordance with these installation instructions. The installer shall be liable for damages incurred as a result of incorrect installation.
- Switch off the power supply before carrying out any work.
- Check the appliance for damage after unpacking it. Do not connect the appliance if it has been damaged in transit.
- Do not lift the appliance using the door or the appliance frame.
- When installing, observe the current, valid building regulations as well as the regional power company's regulations.
- Install the appliance in accordance with the installation diagram. Observe the minimum clearances.
- Installation behind cabinet doors: Suitable measures should be taken to ensure these types of doors cannot close during operation. There is a risk of overheating if the door does not remain open during operation or during cooling (fan operation).
- Before starting up the appliance, remove any packaging material and adhesive film from the cooking compartment and the door.
- The dimensions in the figures are in mm.

24.2 QR code for the installation video

This is where you will find the QR code for the installation video.

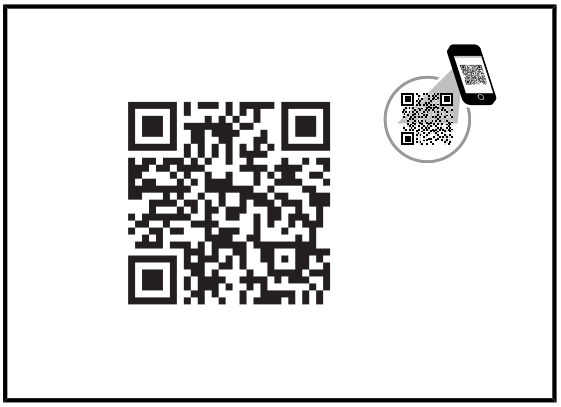

24.3 Planning notes

Observe the following planning notes before installing the appliance.

- The door direction cannot be reversed.
- The distance from the furniture cavity to the door panel surface is 42 mm.
- Consider the overhang when planning to open drawers next to the appliance.
- When planning a corner solution, consider a door opening angle of at least 97°.
- Do not install any other electrical appliance in the cupboard above this appliance.
- Do not install a sink above this appliance.
- When installing above a fully automatic coffee machine, use the intermediate floor or the metal bracket. You can obtain the intermediate floor and the metal bracket from after-sales service or the online shop.
- When installing two appliances above each other directly beside a fully automatic coffee machine, use the intermediate floor or the metal bracket between the four appliances.
- The appliance's mains socket must be located outside of the built-in niche.

24.4 Appliance dimensions

You will find the dimensions of the appliance here

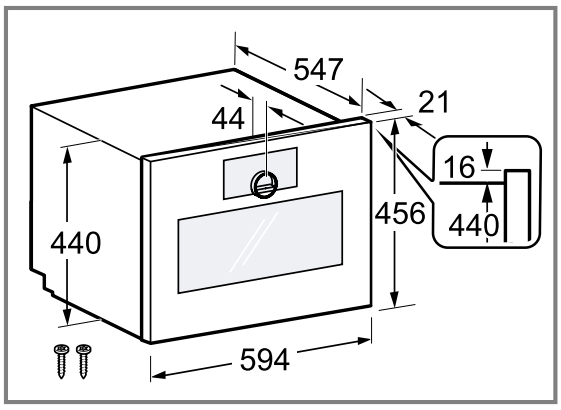

24.5 Installation accessories

Use original accessories.

Accessories	Order number
Intermediate floor	GA601010

24.6 Preparing the units

Requirement: Fitted units must be heat-resistant up to 90 °C, and adjacent unit fronts up to 70 °C.

1. Ensure that the mains socket is located outside of the built-in niche.
2. Carry out cut-out work on the units and then insert the appliance.
3. After making the cut-outs, remove any shavings. Shavings may impair the function of electrical components.
4. Secure any unsecured units to the wall using a standard bracket.
5. Install the appliance only so high that the customer can remove any accessories effortlessly.

24.7 Electrical connection

In order to safely connect the appliance to the electrical system, follow these instructions.

⚠ **WARNING – Risk of electric shock!**
It must always be possible to disconnect the appliance from the electricity supply. The appliance must only be connected to a protective contact socket that has been correctly installed.

- ▸ The mains plug for the mains power cable must be easily accessible after the appliance is installed.
- ▸ If this is not possible, an all-pole isolating switch must be integrated into the permanent electrical installation according to the conditions of overvoltage category III and according to the installation regulations.
- ▸ The permanent electrical installation must only be wired by a professional electrician. We recommend installing a residual-current circuit breaker (RCCB) in the appliance's power supply circuit.

Improper repairs are dangerous.

- ▸ Repairs to the appliance should only be carried out by trained specialist staff.
- ▸ Only use genuine spare parts when repairing the appliance.
- ▸ If the power cord or the appliance power cable of this appliance is damaged, it must be replaced with a special power cord or special appliance power cable, which is available from the manufacturer or its Customer Service.
- ▸ If the power cord of this appliance is damaged, it must be replaced by trained specialist staff.

- The appliance corresponds to protection class I and must only be operated with a protective earth connection.
- The fuse protection must correspond to the power rating specified on the appliance's rating plate and to local regulations.
- The appliance must be disconnected from the power supply whenever installation work is being carried out.
- The appliance must only be connected using the power cable provided. Fully connect the power cord to the back of the appliance.
- The power cable must only be replaced with a cable from the original manufacturer. The power cable can be obtained from customer service.
- Contact protection must be ensured by the installation.

Power cable with a plug with earthing contact

For an appliance with a plug with earthing contact, follow these instructions.

- Connect the appliance only to a correctly installed, earthed socket.
- If the plug with earthing contact can no longer be accessed after installation, an energy-isolating device in the phases must be provided in the permanent electrical installation in accordance with the installation regulations.
- Do not use extension cables, socket strips or multiple socket strips. Overloading leads to a risk of fire.

Power cable without a plug with earthing contact

For an appliance without a plug with earthing contact, follow these instructions.

Note: Only a licensed professional may connect appliances without plugs. Damage caused by incorrect connection is not covered under the warranty.
An isolating switch must be integrated into the permanent electrical installation according to the installation regulations.

Connecting a power cord without a plug with earthing contact

1. Identify the phase (external conductor) and neutral conductor in the mains socket.
   The appliance may be damaged if it is not connected correctly.
2. Observe the specifications on the rating plate.
3. Connect the wires of the mains power cable according to the colour coding:
   - GN/YE: Green and yellow = Conductor ⏚
   - BU: Blue = Neutral conductor
   - BN: Brown = Phase (external conductor)

24.8 Installing the appliance in a tall unit

Note: The red label sticking out of the appliance door provides support during installation. Before connecting to the mains, pull on the red label to open the appliance door.

1. Observe the clearances when installing in a tall unit.
   - ▸ Note the dimensions for the built-in niche in the intermediate floor.

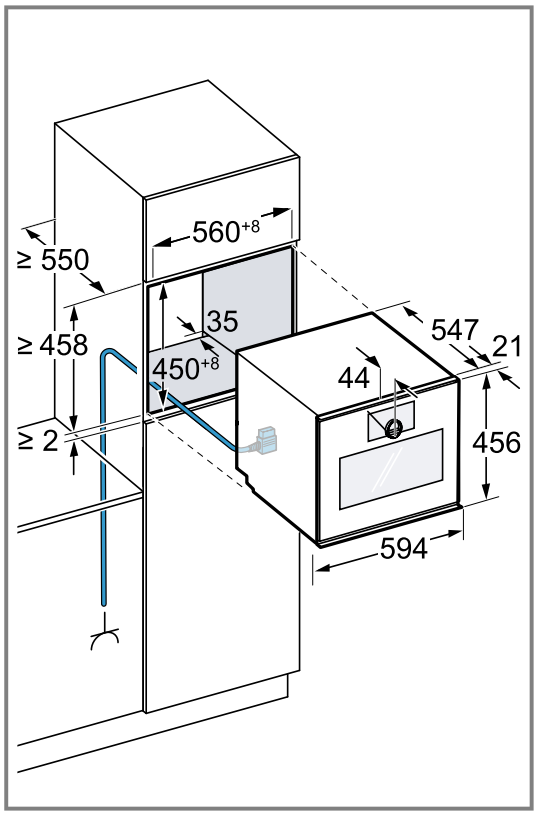

Depending on the product variant, the appliance is equipped with or without a plug.

2. When installing beside a wall, ensure that the potential opening angle of the appliance door is based on the minimum clearances to the wall.

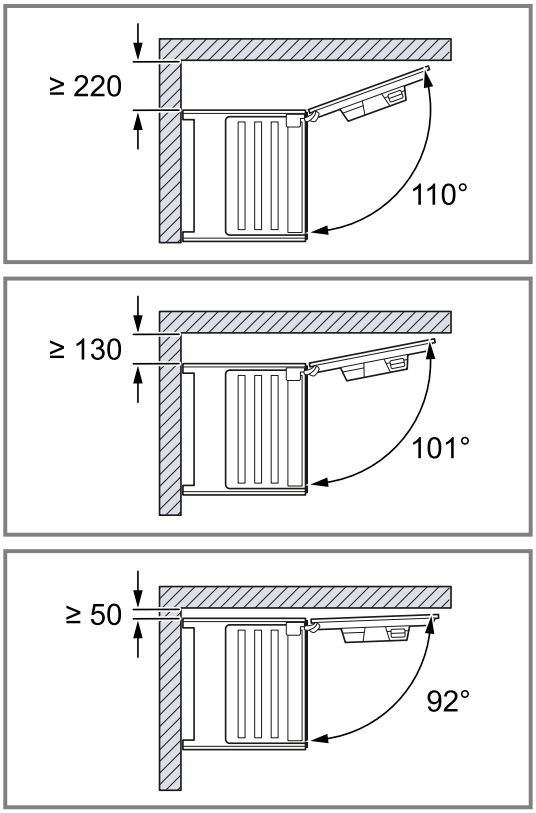

3. When installing 2 appliances on top of each other, observe the clearances.
   - Make sure that the distance between the appliance and the wall is at least 35 mm.

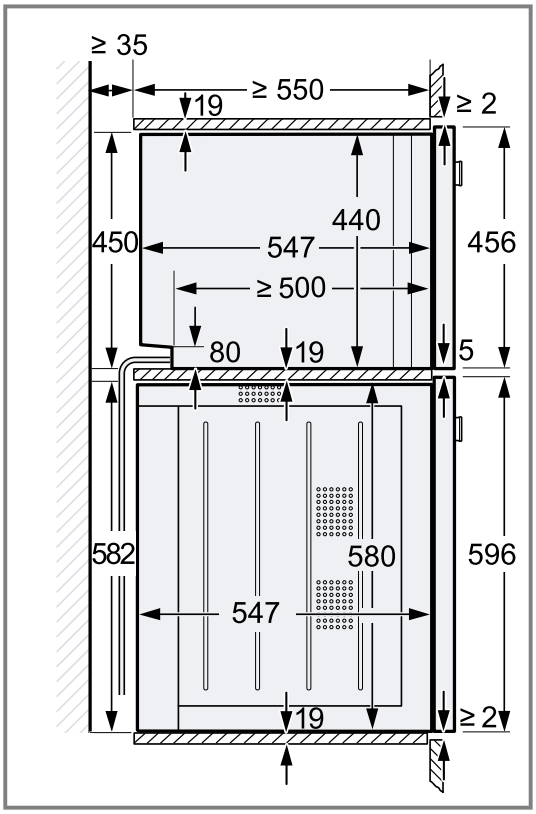

4. If there is no intermediate floor above the appliance, secure the appliance against tipping in the built-in niche.
   - Secure two brackets from the GA601010 installation accessories to both sides of the built-in niche.
   - Observe the installation instructions for the brackets.
5. **Note:** Ensure that you adjust all white plastic elements on the appliance: Left and right, top and bottom.
   If the thickness of the side sections of the unit is 16 mm, do not remove the white plastic elements. The white plastic elements provide support when centring the appliance.
6. If the thickness of the side sections of the unit is 20 mm, remove the white plastic elements.

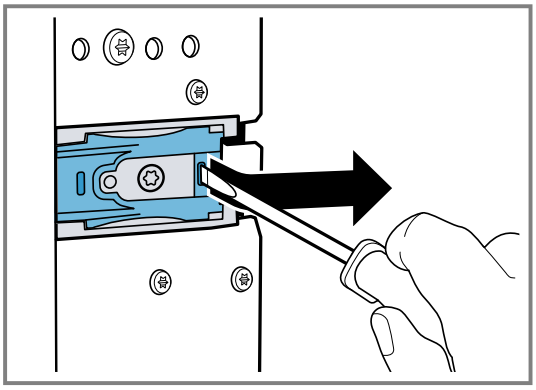

7. If the thickness of the side sections of the unit is 19 mm, remove the white plastic elements ①, turn them 180° ② and refit them ③.

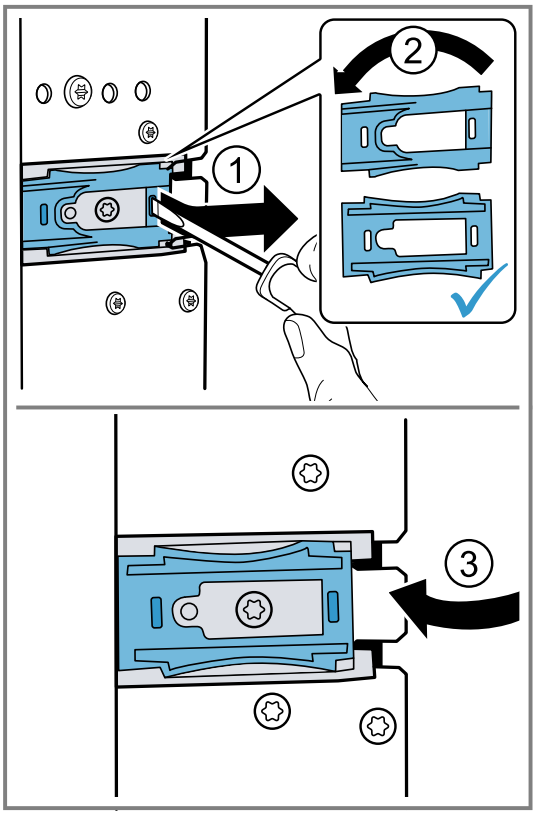

8. Push the appliance all the way into the built-in unit.
   ▸ Do not kink or trap the connection cable.

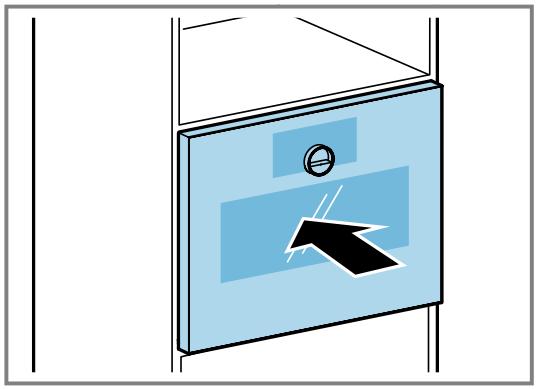

9. Centre the appliance.
   There must be an air gap of at least 5 mm between the appliance and the adjacent unit fronts.
10. Use a spirit level to adjust the appliance so that it is perfectly level.

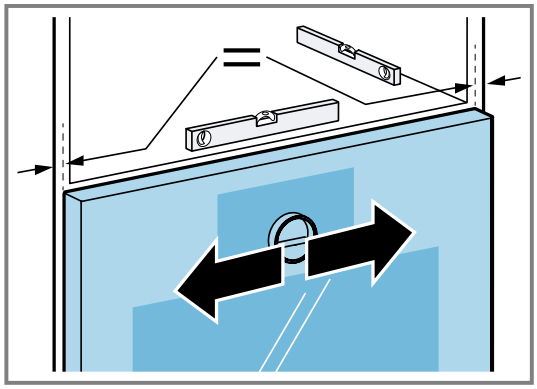

11. Open the appliance door.
12. Secure the appliance to the unit using the enclosed screws.

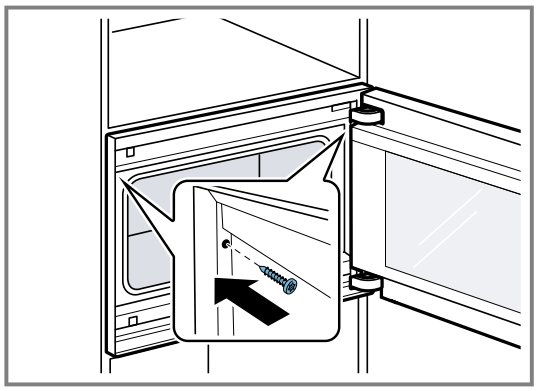

13. Remove the red plastic transport lock from the upper door catch.

24.9 Adjustable intermediate floors with brackets

An adjustable intermediate floor with brackets (GA601010) is available for your appliance.

ATTENTION
If you install appliances on the intermediate floor with brackets that are too heavy, the intermediate floor may bend.
- ▸ Do not install the intermediate floor with brackets below an oven.
- ▸ Install the intermediate floor with brackets below a combi-steam oven.

If you do not install the appliance correctly on intermediate floor GA601010, the intermediate floor may bend.
- ▸ Do not position the appliance at an angle in the recess on the intermediate floor.
- ▸ Slide the appliance into the tall unit parallel to the side walls of the recess.

Note: Do not install a microwave below a fully automatic coffee machine.

Only install the intermediate floor with brackets:
- ▪ Below a combi-steam oven in the same series.
- ▪ Below a microwave in the same series.
- ▪ Below a fully automatic coffee machine that you install above an oven in the same series.
- ▪ Below a fully automatic coffee machine that you install above a combi-steam oven in the same series.

Do not install the intermediate floor with brackets:
- ▪ Below an oven.
- ▪ Between two fully automatic coffee machines that you want to install vertically stacked.
- ▪ Above a combi-steam oven in the same series.

Installing the appliance above intermediate floors with brackets

- ▸ Do not position the appliance at an angle in the recess on the intermediate floor with brackets. Slide the appliance into the tall unit parallel to the side walls of the recess.

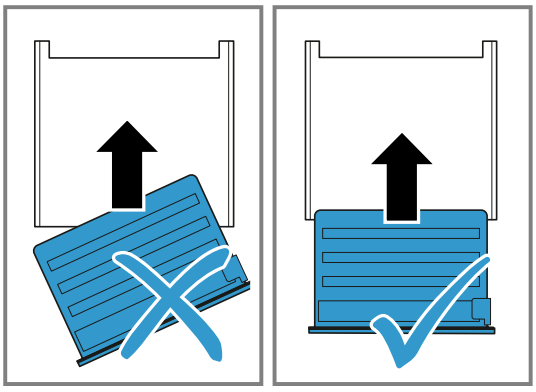

24.10 Aligning the appliance door

The appliance door is already aligned when the appliance is delivered. Alignment is not normally required. If you install multiple appliances next to each other or on top of each other, align the appliance door.
- ▪ Correct the appliance height →*Page 54*
- ▪ Changing the door opening angle

Correcting the appliance height

1. Pull the appliance out slightly from its built-in niche.

2. Loosen the locking screw.

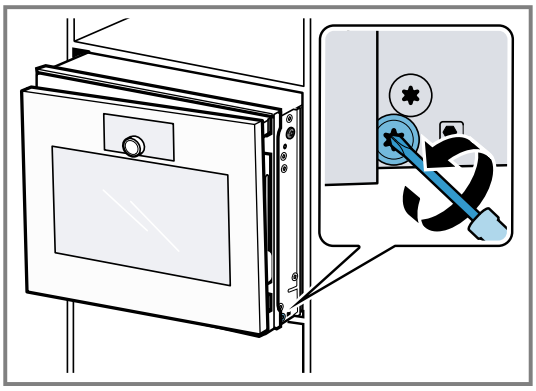

3. Open the appliance door.
4. Use the setting screw to correct the appliance height.

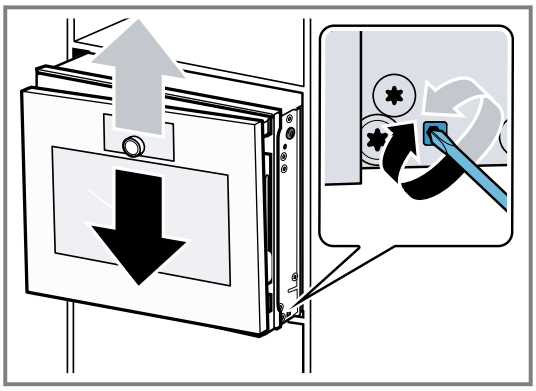

5. Tighten the locking screw.
6. Slide the appliance into the built-in niche.

Changing the door opening angle

There are two available opening angles for the appliance door.

1. Pull the appliance out slightly from its built-in recess.
2. Loosen the screw on the right-hand side at the very rear of the appliance slightly.

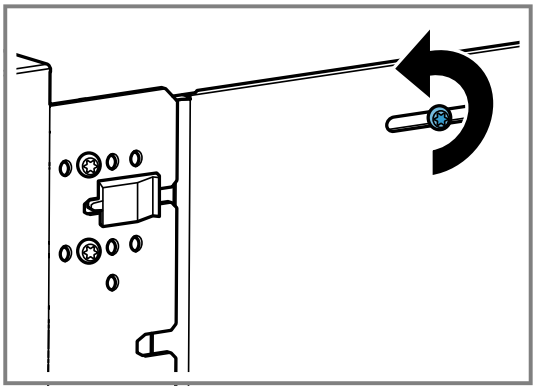

3. Remove the two screws in front of the black plastic element.

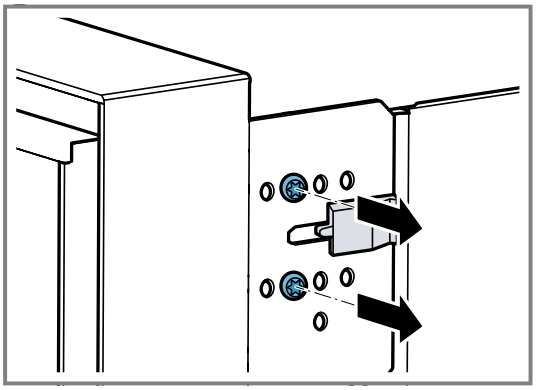

4. Slide the black plastic element to the right.

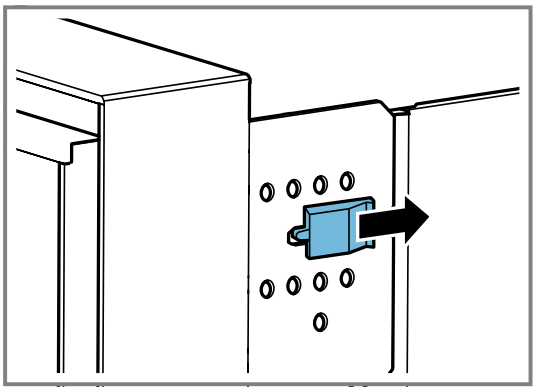

5. Screw the two screws into the holes further to the right on the appliance.

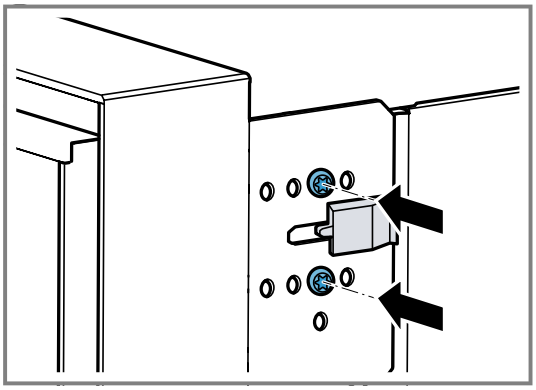

The further right you screw the screws into the appliance, the smaller the door opening angle.
When the screws are positioned to the right, the opening angle of the appliance door is approx. 92°.

24.11 Starting up the appliance after installation

Requirement: The appliance has been installed and connected.

1. Press ⏻ on the control ring.
✔ The display shows the GAGGENAU logo for approx. 30 seconds and then "Initialisation".
2. Set the language.
3. Follow the information in the installation assistant on the display.
   ▸ Press → or turn the control ring.
4. Select the settings for the "Installation height".

5. Aligns the display horizontally or vertically depending on the installation position or the user's body size.
6. Deactivate demo mode.

24.12 Combining the appliance with an oven

1. Only combine suitable appliances of the same brand and series.
2. Fit the combi-steam oven first, then the oven.
3. When installing the appliance beside an oven, ensure that the appliance doors open in the opposite direction.

24.13 Combining the appliance with a fully automatic coffee machine

1. Only combine suitable appliances of the same brand and series.
2. Follow the installation instructions for the fully automatic coffee machine and for the intermediate floor.
3. When installing above a fully automatic coffee machine, use the intermediate floor or the metal bracket. You can obtain the intermediate floor and the metal bracket from after-sales service or the online shop.
4. When installing two appliances above each other directly beside a fully automatic coffee machine, use the intermediate floor or the metal bracket between the four appliances.

24.14 Combining the appliance with a warming drawer

ATTENTION
Sharp edges on the appliance may damage the front panel of the warming drawer.

- Do not damage the front panel of the warming drawer when sliding the appliance in.
- Before installing another appliance, open the warming drawer, place a cloth over the front panel and close the warming drawer to protect the front panel of the warming drawer from damage.

1. Only combine suitable appliances of the same brand and series.
2. Install the warming drawer first.
3. Follow the installation instructions for the warming drawer.
4. Slide the appliance, on the warming drawer, into the built-in cabinet.

24.15 Combining the appliance with a microwave

1. Only combine suitable appliances of the same brand and series.
2. Fit the microwave first, then the combi-steam oven.

24.16 Removing the appliance

1. Disconnect the appliance from the power supply
2. Undo the fastening screws.
3. Lift the appliance slightly and pull it out completely.

The difference is Gaggenau

gaggenau.com

BSH Hausgeräte GmbH
Carl-Wery-Straße 34
81739 München, GERMANY
www.gaggenau.com

Valid within Great Britain:
Imported to Great Britain by
BSH Home Appliances Ltd.
Grand Union House
Old Wolverton Road
Wolverton, Milton Keynes
MK12 5PT
United Kingdom

9001954421 (060402) REG25
en