BOSCH

Register your new device on MyBosch now and get free benefits: **bosch-home.com/welcome**

MyBosch

Washing machine

WGB254A0SG

[en] User manual and installation instructions

Further information and explanations are available online:

Table of contents

1 Safety 4
1.1 General information 4
1.2 Intended use 4
1.3 Restriction on user group 4
1.4 Safe installation 5
1.5 Safe use 7
1.6 Safe cleaning and maintenance 9

2 Preventing material damage 10

3 Environmental protection and saving energy 11
3.1 Disposing of packaging 11
3.2 Save energy and conserve resources 11
3.3 Energy saving mode 11

4 Installation and connection 11
4.1 Unpacking the appliance 11
4.2 Contents of package 11
4.3 Requirements for the installation location 12
4.4 Removing the transit bolts 13
4.5 Connecting the appliance 14
4.6 Aligning the appliance 15

5 Before using for the first time .. 16
5.1 Starting an empty washing cycle 16

6 Familiarising yourself with your appliance 17
6.1 Appliance 17
6.2 Detergent drawer 17
6.3 Control panel 18
6.4 Operating logic 18

7 Display 20

8 Buttons 23

9 Programmes 26

10 Accessories 30

11 Laundry 30
11.1 Preparing the laundry 30
11.2 Care symbols on the care labels 31

12 Detergents and care products 31

13 Basic operation 31
13.1 Switching on the appliance ... 31
13.2 Setting a programme 31
13.3 Opening the door 32
13.4 Loading laundry 32
13.5 Starting the programme 32
13.6 Soaking laundry 33
13.7 Adding laundry 33
13.8 Cancelling the programme 33
13.9 Resuming the programme when the programme status is Rinse Hold 33
13.10 Unloading the laundry 33
13.11 Put the appliance into standby mode 33

14 Childproof lock 34
14.1 Activating the childproof lock 34
14.2 Deactivating the childproof lock 34

15 Intelligent dosing system 34
15.1 Pouring liquid detergent and fabric softener into the dispensers 34
15.2 Using the manual dosing compartment 35
15.3 Adapting the ❀/💧 dispenser 35
15.4 Setting the basic dosage amount 35

16 Home Connect 36
16.1 Setting up the Home Connect app 36
16.2 Setting up Home Connect..... 36
16.3 Activating Wi-Fi on the appliance 36
16.4 Deactivating Wi-Fi on the appliance 37
16.5 Installing the software update 37
16.6 Resetting the appliance network settings 37
16.7 Remote start..... 37
16.8 Remote diagnostics 37
16.9 Data protection..... 38

17 Basic settings..... 38
17.1 Overview of the basic settings..... 38
17.2 Changing the basic settings..... 38

18 Cleaning and servicing..... 39
18.1 Cleaning the drum..... 39
18.2 Cleaning the detergent drawer..... 39
18.3 Cleaning the drain pump..... 41
18.4 Cleaning the rubber gasket .. 43

19 Troubleshooting..... 45
19.1 Emergency release 52
19.2 Restart the appliance. 52

20 Transportation, storage and disposal 52
20.1 Removing the appliance 52
20.2 Inserting the transit bolts..... 52
20.3 Using the appliance again 53
20.4 Disposing of old appliance ... 53

21 Customer Service..... 53
21.1 Product number (E-Nr.), production number (FD) and consecutive numbering (Z-Nr.) 53
21.2 AQUA-STOP guarantee..... 54

22 Consumption values..... 54

23 Technical data..... 54
23.1 Information regarding Free and Open Source Software... 55

24 Declaration of Conformity 55

1 Safety

Observe the following safety instructions.

1.1 General information

- Read this instruction manual carefully.
- Keep the instruction manual and the product information safe for future reference or for the next owner.
- Do not connect the appliance if it has been damaged in transit.

1.2 Intended use

Only use this appliance:
- for washing machine-washable fabrics and hand-washable wool in accordance with the care label.
- with tap water and commercially available detergents and care products suitable for washing machines.
- in private households and in enclosed spaces in a domestic environment.
- Up to an altitude of 4000 m above sea level.

1.3 Restriction on user group

This appliance may be used by children aged 8 or over and by people who have reduced physical, sensory or mental abilities or inadequate experience and/or knowledge, provided that they are supervised or have been instructed on how to use the appliance safely and have understood the resulting dangers.
Do not let children play with the appliance.
Cleaning and user maintenance must not be performed by children unless they are being supervised.
Keep children under the age of 3 years and pets away from the appliance.

1.4 Safe installation

⚠ WARNING – Risk of electric shock!

Incorrect installation is dangerous.

- Connect and operate the appliance only in accordance with the specifications on the rating plate.
- Connect the appliance to a power supply with alternating current only via a properly installed socket with earthing.
- The protective conductor system of the domestic electrical installation must be properly installed. The installation must have a sufficiently large cross section.
- When using a residual current circuit breaker, only use a type with the ⊠ mark.
- Never equip the appliance with an external switching device, e.g. a timer or remote control.
- When the appliance is installed, the mains plug of the power cord must be freely accessible. If free access is not possible, an isolating switch must be integrated into the permanent electrical installation according to the installation regulations.
- When installing the appliance, check that the power cable is not trapped or damaged.

If the insulation of the power cord is damaged, this is dangerous.

- Never let the power cord come into contact with hot appliance parts or heat sources.
- Never let the power cord come into contact with sharp points or edges.
- Never kink, crush or modify the power cord.

⚠ WARNING – Risk of fire!

It is dangerous to use an extended power cord and non-approved adapters.

- Do not use extension cables or multiple socket strips.
- Only use adapters and power cords approved by the manufacturer.
- If the power cord is too short and a longer one is not available, please contact an electrician to have the domestic installation adapted.

⚠ WARNING – Risk of injury!

The heavy weight of the appliance may result in injury when lifted.

- Do not lift the appliance on your own.

If this appliance is not correctly installed in a washer-dryer stack, the installed appliance may fall.

- Only stack the dryer on a washing machine using the connection kit from the dryer manufacturer . No other installation method is permitted.
- Do not install the appliance in a washer-dryer stack if the dryer manufacturer does not offer a suitable connection kit.
- Do not install appliances from different manufacturers and with varying depths and widths in a washer-dryer stack.
- Do not install a washer-dryer stack on a platform; the appliances may tip over.

⚠ WARNING – Risk of suffocation!

Children may put packaging material over their heads or wrap themselves up in it and suffocate.

- Keep packaging material away from children.
- Do not let children play with packaging material.

⚠ CAUTION – Risk of injury!

The appliance may vibrate or move when in use.

- Place the appliance on a clean, even, solid surface.
- Align the appliance using the appliance feet and a spirit level.

If hoses and power cords have been laid incorrectly, this causes a tripping hazard.

- Lay hoses and power cords in such a way that there is no risk of tripping.

If the appliance is moved by holding onto protruding components, such as the appliance door, the parts may break off.

- Do not move the appliance by holding onto protruding parts.

⚠ CAUTION – Risk of cutting!

Touching sharp edges on the appliance may lead to cuts.

- Do not touch the sharp edges on the appliance.

- Wear protective gloves when installing and transporting the appliance.

1.5 Safe use

⚠ WARNING – Risk of electric shock!

If the appliance or the power cord is damaged, this is dangerous.

- Never operate a damaged appliance.
- Never pull on the power cord to unplug the appliance. Always unplug the appliance at the mains.
- If the appliance or the power cord is damaged, immediately unplug the power cord or switch off the fuse in the fuse box and turn off the water tap.
- Call customer services. → *Page 53*

An ingress of moisture can cause an electric shock.

- Only use the appliance in enclosed spaces.
- Never expose the appliance to intense heat or humidity.
- Do not use steam- or high-pressure cleaners, hoses or sprays to clean the appliance.

⚠ WARNING – Risk of harm to health!

Children can lock themselves in the appliance, thereby putting their lives at risk.

- Do not install the appliance behind a door as this may obstruct the appliance door or prevent it from opening.
- With redundant appliances, unplug the power cord. Then cut through the cord and damage the lock on the appliance door beyond repair so that the appliance door will no longer close.

When spinning larger, waterproof items of laundry, imbalances may arise and lead to injuries.

- Do not wash and spin larger items of laundry, such as blankets or mattress covers, in the appliance.

⚠ WARNING – Risk of suffocation!

Children may breathe in or swallow small parts, causing them to suffocate.

- Keep small parts away from children.
- Do not let children play with small parts.

⚠ WARNING – Risk of poisoning!
Detergents and care products may result in poisoning if consumed.
- ▸ If accidentally swallowed, seek medical advice.
- ▸ Keep detergents and care products out of the reach of children.

⚠ WARNING – Risk of explosion!
Laundry that has been pretreated with flammable cleaning agents that contain solvents may cause an explosion in the appliance.
- ▸ Rinse pretreated laundry thoroughly with water before washing.

⚠ CAUTION – Risk of injury!
The covering plate may break if you stand on or climb onto the appliance.
- ▸ Do not stand on or climb onto the appliance.

The appliance may tip over if you sit on or lean against the open door.
- ▸ Do not sit on or lean against the appliance door.
- ▸ Do not place any objects on the appliance door.

Reaching into the drum while it is still turning may cause hand injuries.
- ▸ Wait for the drum to come to a complete stop before reaching inside.

⚠ CAUTION – Risk of scalding!
When you wash at high temperatures, the detergent solution gets hot.
- ▸ Do not touch the hot detergent solution.

⚠ CAUTION – Risk of chemical burns!
If the detergent drawer is opened, detergent and care products may spray out from the appliance. Contact with eyes or skin may cause irritation.
- ▸ Rinse eyes and/or skin thoroughly with clean water if they come into contact with detergents or care products.
- ▸ If accidentally swallowed, seek medical advice.
- ▸ Keep detergents and care products out of the reach of children.

1.6 Safe cleaning and maintenance

⚠ WARNING – Risk of electric shock!

Improper repairs are dangerous.

- Never make any technical modifications to the appliance or its features.
- Repairs to the appliance should only be carried out by trained specialist staff.
- Only use genuine spare parts when repairing the appliance.
- If the power cord of this appliance is damaged, it must be replaced by the manufacturer, the manufacturer's Customer Service or a similarly qualified person in order to prevent any risk.

An ingress of moisture can cause an electric shock.

- Before cleaning, pull out the mains plug or switch off the fuse in the fuse box.
- Do not use steam- or high-pressure cleaners, hoses or sprays to clean the appliance.

⚠ WARNING – Risk of injury!

The use of non-original spare parts and non-original accessories is dangerous.

- Only use the manufacturer's original spare parts and original accessories.

⚠ WARNING – Risk of poisoning!

Poisonous fumes may be given off if you use cleaning agents that contain solvents.

- Do not use cleaning agents that contain solvents.

2 Preventing material damage

ATTENTION!
The functionality of the appliance may be impaired if you use the wrong quantity of fabric softener, detergent, care product or cleaning agent.
- Follow the dosage recommendations from the manufacturer.

Exceeding the maximum load capacity impairs the function of the appliance.
- Observe the maximum load capacity for each programme and do not exceed it.
  → *"Programmes", Page 26*

The appliance is secured for transportation using transit bolts. Transit bolts which have not been removed may result in material damage and damage to the appliance.
- Before starting up the appliance, remove the transit bolts completely and keep them in a safe place.
- Before transport, fit the transit bolts fully in order to prevent damage in transit.

Material damage may be caused if the water inlet hose is connected incorrectly.
- Tighten the screw connections on the water inlet until they are hand-tight.
- Connect the water inlet hose directly to the water tap, without any additional connecting elements such as adapters, extensions or valves.
- Make sure that the valve housing for the water inlet hose does not come into contact with its surroundings and is not subjected to any external forces.
- Ensure that the inner diameter of the water tap is at least 17 mm.
- Make sure that the length of the thread on the connection to the water tap is at least 10 mm.

If the water pressure is too high or too low, the appliance may not be able to operate properly.
- Ensure that the water pressure in the water supply system is at least 100 kPa (1 bar) and max. 1000 kPa (10 bar).
- If the water pressure exceeds the maximum value specified, a pressure-reducing valve must be installed between the drinking water connection and the hose set of the appliance.
- Do not connect the appliance to the mixer tap of an unpressurised hot-water boiler.

Modified or damaged water hoses may result in material damage and damage to the appliance.
- Never kink, crush, modify or cut through water hoses.
- Only use the water hoses supplied with the appliance or genuine spare hoses.
- Never re-use water hoses that have been used before.

Operating the appliance using water that is dirty or too hot may lead to material damage and damage to the appliance.
- Only operate the appliance with cold mains water.

Unsuitable cleaning products may damage the surfaces of the appliance.
- Do not use harsh or abrasive detergents.
- Do not use cleaning products with a high alcohol content.
- Do not use hard scouring pads or cleaning sponges.
- Clean the appliance with nothing but water and a soft, damp cloth.

- Remove all detergent residue, spray residue or other residues immediately if they come into contact with the appliance.

3 Environmental protection and saving energy

3.1 Disposing of packaging

The packaging materials are environmentally compatible and can be recycled.

- Sort the individual components by type and dispose of them separately.

3.2 Save energy and conserve resources

If you follow these instructions, your appliance will use less electricity and less water.

- Choose programs with low temperatures and longer wash times and use maximum load capacity. → *Page 26*
- Add detergent based on the laundry's degree of soiling.
- Reduce the washing temperature for lightly and normally soiled laundry.
- Set the maximum spin speed if you want to dry the laundry in the tumble dryer afterwards.
- Wash the laundry without prewash.

3.3 Energy saving mode

If you do not use the appliance for a brief period, it automatically switches to energy-saving mode. All displays go out and II ▷ flashes.
Energy-saving mode ends when you use the appliance again.

If you do not use the appliance for an extended period, it automatically switches to standby mode.

4 Installation and connection

4.1 Unpacking the appliance

ATTENTION!
Objects remaining in the drum that are not designed for operation with the appliance may cause material damage and damage to the appliance.

- Remove these objects, along with all supplied accessories, from the drum before starting the appliance.

1. Remove any packaging and protective covers completely from the appliance.
   → *"Disposing of packaging", Page 11*
2. Check the appliance for visible damage.
3. Open the door. → *Page 32*
4. Remove any accessories from the drum.
5. Close the door.

4.2 Contents of package

After unpacking all parts, check for any damage in transit and completeness of the delivery.

ATTENTION!
If the appliance is operated with incomplete or defective accessories, the appliance may not be able to op-

erate properly, or this may result in material damage or damage to the appliance.

- Do not operate the appliance with incomplete or defective accessories.
- Replace the accessories in question before operating the appliance.
  → *"Accessories", Page 30*

Note: The appliance has undergone a function test at the factory. This may cause water stains in the appliance, which the first wash cycle removes.

The delivery consists of the following:

- Washing machine
- Accompanying documents
- Transit bolts
- Cover cap[1]

4.3 Requirements for the installation location

⚠ **WARNING**
Risk of electric shock!
The appliance contains live parts. Touching live parts is dangerous.

- Do not operate the appliance without a cover cap.

⚠ **WARNING**
Risk of injury!
When using the appliance on a base, the appliance may tip over.

- Always secure the feet of the appliance to a base using the manufacturer's fixing brackets → *Page 30* before using the appliance for the first time.

ATTENTION!
If residual water in the appliance freezes, this may cause damage to the appliance.

- Do not install or operate this appliance anywhere that is liable to experience frost or outdoors.

If the appliance is tilted at an angle greater than 40°, residual water may leak out of the appliance and cause material damage.

- Tilt the appliance carefully.
- Transport the appliance in an upright position.

Installation location	Requirements
Base 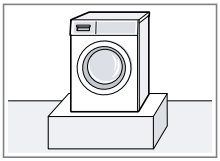	Secure the appliance with fixing brackets → *Page 30*.
Wooden joist floor 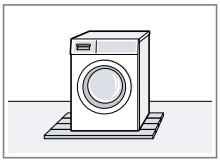	Place the appliance on a water-resistant wooden board (minimum thickness of 30 mm) which is screwed tightly to the floor.
Kitchen unit 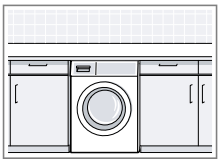	Only install the appliance underneath a continuous worktop that is securely connected to adjacent cabinets. Required niche width: 60 cm.

[1] The number of cover caps varies depending on the model.

Installation location	Requirements
Against a wall 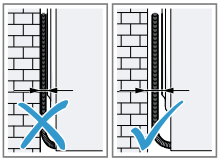	Do not trap the power cord or the hoses between the wall and the appliance.

4.4 Removing the transit bolts

The appliance is secured for transportation using transit bolts on the rear of the appliance.

Note: Keep the transit bolt screws and the sleeves in a safe place for future transport.

1. Remove the hose ① and the power cord ② from the holders.

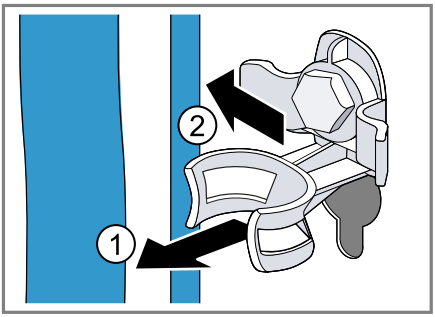

2. Unscrew ① and remove ② all of the screws for the 4 transit bolts using a WAF 13 wrench.

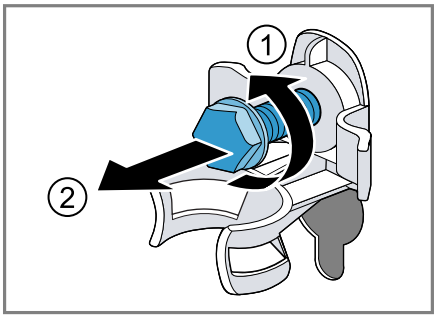

3. Remove the 4 sleeves.

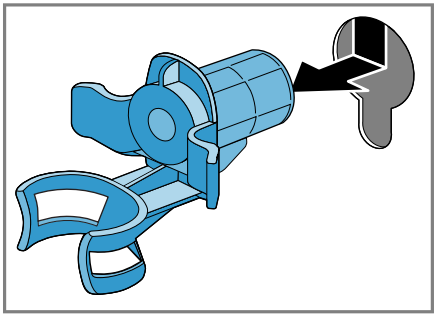

4. Insert the cover cap and push it downwards.

Notes

- Note the number of cover caps included in the scope of delivery

- If four cover caps are included in the scope of delivery, insert the cover caps in the four openings for the transit bolts.

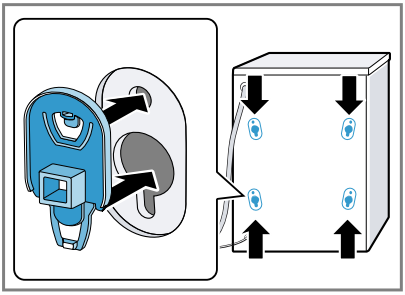

- If one cover cap is included in the scope of delivery, insert the cover cap in the bottom left opening for the transit bolt.

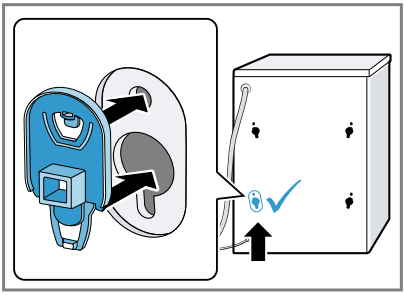

Note: To install the transit bolts to transport the appliance, perform these steps again in the reverse order.

4.5 Connecting the appliance

Connecting the water inlet hose

⚠ **WARNING**
Risk of electric shock!
The appliance contains live parts. Touching live parts is dangerous.
- Do not immerse the electrical AquaStop valve in water.

ATTENTION!
Material damage may be caused if the water inlet hose is connected incorrectly.
- Tighten the screw connections on the water inlet until they are hand-tight.

1. Connect the water inlet hose to a tap (26.4 mm = 3/4").

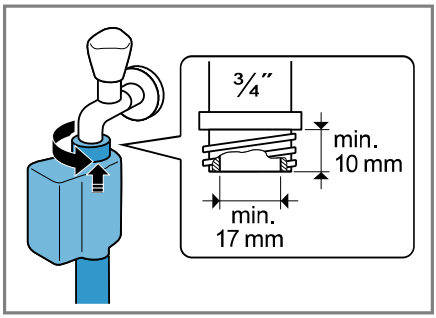

2. Open the water tap carefully and check that the connection points are tight.

Water outlet connection types

This information is intended to help you to connect this appliance to the water outlet.

ATTENTION!
When draining, the water outlet hose is subject to water pressure and may come loose from the installed connection point.
- Secure the water outlet hose against unintentional loosening.

In the event of a blocked or covered outlet, accumulated wastewater can flow back into the appliance.
- Before operating the appliance, ensure that the wastewater drains away quickly and eliminate any blockages.

Note: Observe the draining heights. The maximum draining height is 100 cm.

Siphon 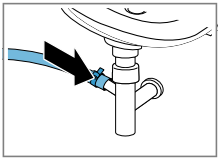	Secure the connection point with a (24–40 mm) hose clamp.
Sink 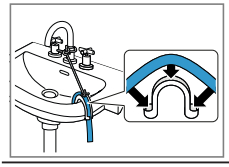	Fix and secure the water outlet hose with an elbow. → *"Accessories", Page 30*
Plastic pipe with rubber sleeve or gully 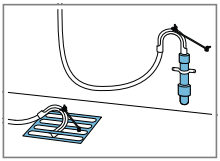	Fix and secure the water outlet hose with an elbow. → *"Accessories", Page 30*

Connecting the appliance to the electricity supply

Note: Your electrical domestic installation for this appliance must comply with the local legal provisions and safety regulations, and should include a residual current circuit-breaker.

1. Insert the mains plug of the appliance's power cable in a socket nearby.

   The connection details of the appliance can be found under Technical data → *Page 54*.
2. Check the mains plug is inserted properly.

4.6 Aligning the appliance

In order to reduce noise and vibration and to prevent the appliance from moving, align the appliance correctly.

1. Use a WAF 17 wrench to loosen the lock nuts in a clockwise direction.

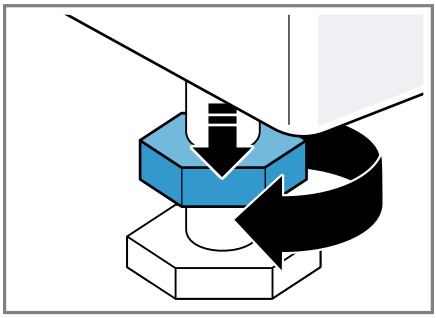

2. To align the appliance, turn the appliance feet. Check that the appliance is level using a spirit level.

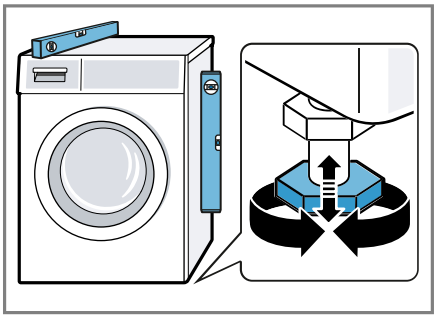

All appliance feet must stand firmly on the ground.

3. Use a WAF 17 wrench to tighten the lock nuts against the housing until they are hand-tight.

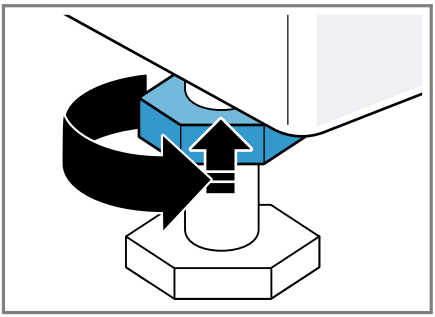

In doing so, hold the foot tight and do not adjust its height.

5 Before using for the first time

Prepare the appliance for use.

5.1 Starting an empty washing cycle

Your appliance was inspected thoroughly before leaving the factory. To remove any residual water, run the first wash cycle without any laundry.

1. Press ⏻.

   The switch-on process takes a few seconds.
2. Select the **Cottons 90°C** programme or the drum cleaning programme in the Home Connect app.
3. Close the door.
4. Pull out the detergent drawer.
5. Pour approx. 1 litre of water into the manual dosing compartment.

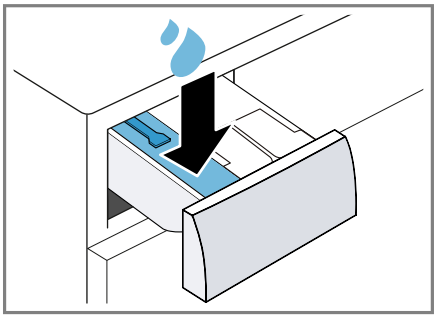

6. Add washing powder containing oxygen bleach to the manual dosing compartment.

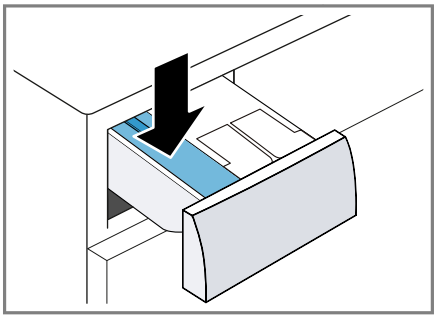

   To prevent foaming, use only half of the amount of detergent recommended by the detergent manufacturer for light soiling. Do not use detergent suitable for woollens or delicates.
7. Push in the detergent drawer.
8. Press II ▷ to start the programme.

✔ The display shows the remaining programme duration.

✔ After the programme has ended, the display shows: **End**.

9. Start the first wash cycle or press ⏻ to put the appliance in standby mode.

   → *"Basic operation", Page 31*

6 Familiarising yourself with your appliance

6.1 Appliance

You can find an overview of the parts of your appliance here.

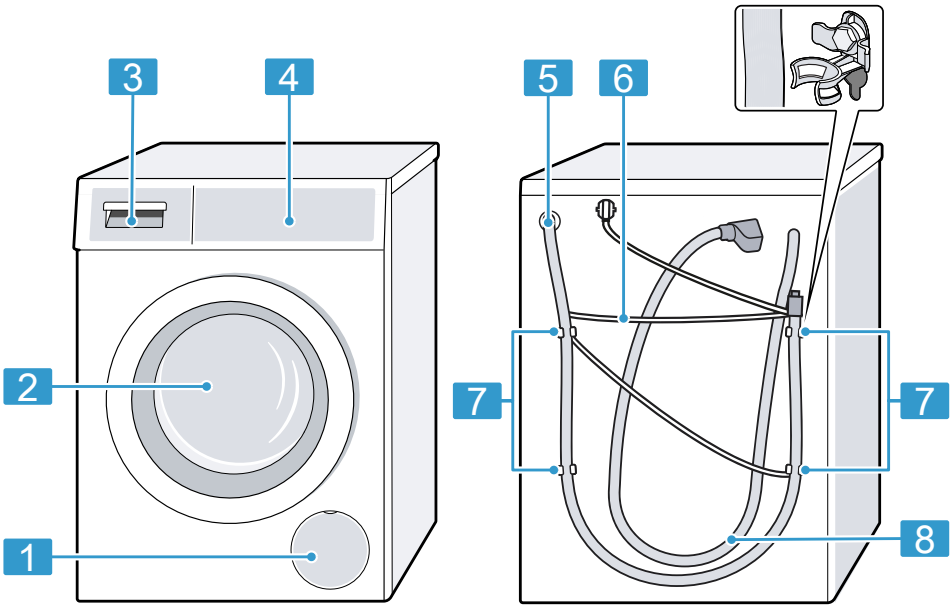

On certain models, specific details such as the colour and shape may differ from those pictured.

1	Maintenance flap for the drain pump → *Page 41*
2	Door → *Page 32*
3	Detergent drawer → *Page 17*
4	Control panel → *Page 18*
5	Water outlet hose → *Page 14*
6	Power cord → *Page 15*
7	Transit bolts
8	Water inlet hose → *Page 14*

6.2 Detergent drawer

Note: Observe the manufacturer's instructions on the use and dosage of the detergent and care product and the information in the programme descriptions.

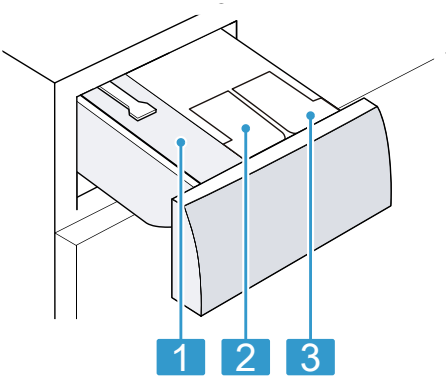

1	Manual dosing compartment → *"Using the manual dosing compartment", Page 35*
2	❀ / ♢: Dispenser for fabric softener or liquid detergent → *"Intelligent dosing system", Page 34*
3	♢: Dispenser for liquid detergent → *"Intelligent dosing system", Page 34*

6.3 Control panel

You can use the control panel to configure all functions of your appliance and to obtain information about the operating status.

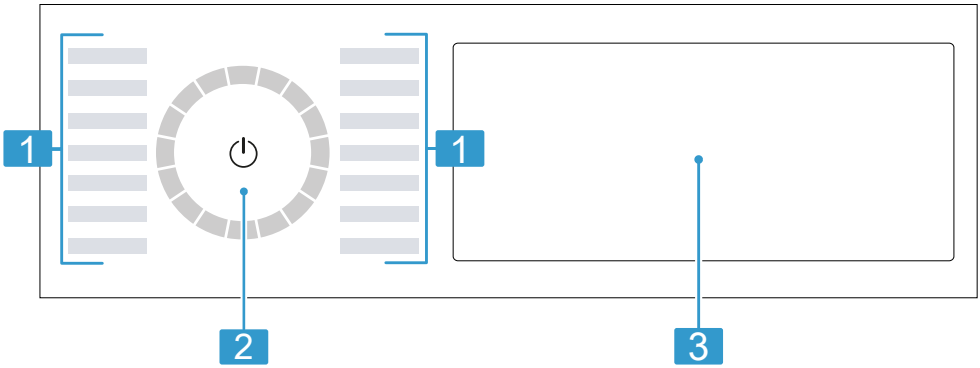

1	Programmes → *Page 26*
2	Programme selector → *Page 31*
3	Buttons → *Page 23* and display → *Page 20*

6.4 Operating logic

Some areas of the display are buttons and respond to touch. You can activate, deactivate or change set-

tings by pressing the buttons. The activated settings are highlighted brightly on the display.

ATTENTION!
Pressing on the display with force may cause damage.
- Do not apply heavy pressure on the display.
- Do not press on the display using pointed or sharp objects.

Displaying or hiding additional buttons

Some buttons are hidden for a reduced display. If you display these additional buttons on the display, you can activate or deactivate the corresponding settings.

1. To display the additional buttons, briefly press **More**.

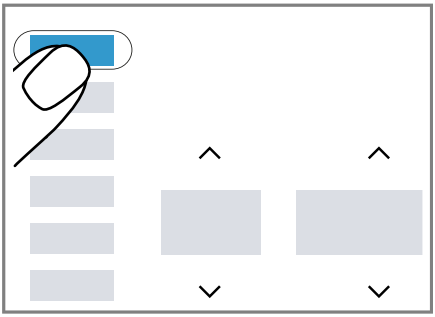

✔ The display shows all additional buttons.

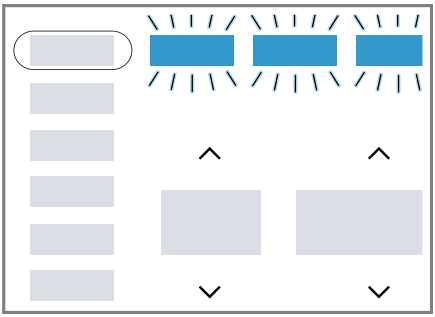

2. To hide the additional buttons, briefly press **More** again.

Changing a setting value

If you activate certain settings, the display shows selection buttons and you can change the setting value.
- Press the selection buttons → *Page 23*.

  The display shows the setting value.

7 Display

The display shows the current settings, options or relevant information.
Depending on the programme status, the display shows some information in the 88:88 area, e.g. End.

Note: Additional functions may be available as a result of software updates.
→ *Page 37*
If a software update is available, you can find further information in the Home Connect app.

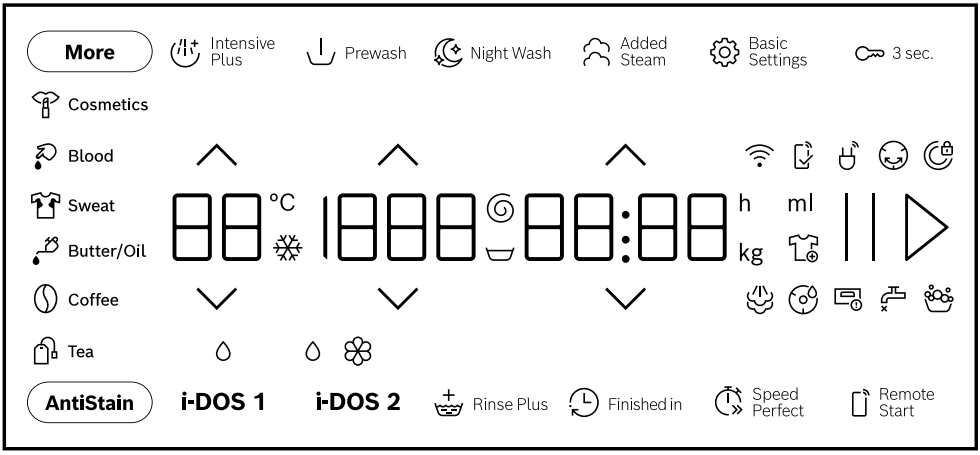

Example: Display

Display	Description
0:40 [1]	Expected programme duration or programme time remaining in hours and minutes.
10 h[1]	Program end time → *"Buttons", Page 24*
10.0[1]	Recommendation for the maximum load capacity for the selected program in kg.
- 1400	Set spin speed in rpm. → *Page 24* 0: No final spin, only draining : Rinse Hold, no draining
- 90	Set temperature in °C. → *Page 24* (cold)
End	Programme status: Programme end
	Programme status: Steaming

[1] Example

Display	Description
Blood	The "Blood" stain type is activated.
Coffee	The "Coffee" stain type is activated.
Cosmetics	The "Cosmetics" stain type is activated.
Sweat	The "Sweat" stain type is activated.
Butter/Oil	The "Cooking fat/cooking oil" stain type is activated.
Tea	The "Tea" stain type is activated.
	Flashes: Drum cleaning is required. Run the Cottons 90°C programme for cleaning and caring for the drum and the outer tub. → *"Cleaning the drum", Page 39*
	■ Lights up: The appliance is connected to your home network via Wi-Fi. ■ Flashes: The appliance is trying to connect to your home network via Wi-Fi. → *"Home Connect ", Page 36*
	■ Lights up: The intelligent dosing system for liquid detergent is activated. ■ Flashes: The fill level of the dispenser is below the minimum level. → *Page 34* (liquid detergent)
	■ Lights up: The intelligent dosing system for liquid detergent or fabric softener is activated. ■ Flashes: The fill level of the dispenser is below the minimum level. → *Page 34* (liquid detergent) (fabric softener)
50 ml[1]	Basic dosage for detergent or fabric softener. → *Page 35*
	The appliance has detected too much foam. → *" or heavy foam build-up.", Page 48*
	■ Lights up: The door is locked. – To add laundry, the door can be unlocked. → *"Adding laundry", Page 33* – To open the door, you can cancel the programme. → *"Cancelling the programme", Page 33* ■ Flashes: The door is not closed.
	■ No water pressure. ■ The water pressure from the tap is too low.
	The detergent drawer has not been pushed in fully. → *" ", Page 47*

[1] Example

Display	Description
E:35[1]	Error code, error display, signal. → *Page 45*

[1] Example

8 Buttons

Note: Additional functions may be available as a result of software updates. → *Page 37*
If a software update is available, you can find further information in the Home Connect app.

Some buttons are hidden for a reduced display. You can display these additional buttons on the display.
→ *"Displaying or hiding additional buttons", Page 19*
The selection of programme settings depends on the programme that is set.

Button	Selection	More information
II ▷	■ Start ■ Cancel ■ Pause	Start, cancel or pause the programme. If II is displayed, you can pause the programme. If ▷ is displayed, you can start the programme.
∧ ∨	Multiple selection	To change a setting, press the ∧ or ∨ selection button until the display shows the required setting.
SpeedPerfect	■ Activate ■ Deactivate	Activate or deactivate a shorter programme duration. **Note:** Energy consumption increases. The washing result is not affected by this.
Intensive Plus	■ Activate ■ Deactivate	Activate or deactivate an extended washing programme. The programme duration is extended by up to 30 minutes. Suitable for heavily soiled laundry.
AntiStain	Multiple selection	Select the type of stain. The temperature, drum movement and soaking time are all adjusted to suit the type of stain.
i-DOS 1	■ Activate ■ Deactivate ■ Setting the basic dosage amount	Briefly press the button to activate or deactivate the intelligent dosing system for liquid detergent. Press and hold the button for approx. 3 seconds to set the basic dosage. → *Page 35*

Button	Selection	More information
i-DOS 2	■ Activate ■ Deactivate ■ Adapting the dispenser ■ Setting the basic dosage amount	Briefly press the button to activate or deactivate the intelligent dosing system for fabric softener ❀ or liquid detergent ♢. Press the button for approximately 3 seconds to adapt the contents of the ❀/♢ dispenser or set the basic dosage. → *"Intelligent dosing system", Page 34*
⏲ Finished in	Up to 24 hours	Set the programme end time. The programme duration is already included in the set number of hours. Once the programme has started, the programme duration is displayed. **Note:** Press ∧ or ∨ until the display shows the required setting.
∧ ∨	❄ - 90	Adjust the temperature. Set temperature in °C.
∧ ∨	▽ - 1400	Adjust the spin speed or activate ▽ (Rinse Hold). Set spin speed in rpm. If ▽ is selected, the water is not drained at the end of the washing cycle and the spin cycle is deactivated. The laundry remains in the water used for rinsing.
⏻ (mains switch)	■ Switch on ■ Standby mode ■ Restart the appliance	Switch on the appliance or put it in standby mode. If the control panel does not respond, press and hold ⏻ for approximately 5 seconds to restart the appliance. → *"The display and buttons do not respond.", Page 48*
Remote Start	■ Activate ■ Deactivate ■ Opening the Home Connect settings	Activate or deactivate remote start. → *Page 37*
3 sec.	■ Activate ■ Deactivate	→ *"Childproof lock", Page 34*
⚙ Basic Settings	Multiple selection	→ *"Basic settings", Page 38*

Button	Selection	More information
More	■ Displaying or hiding additional buttons	■ If you briefly press the button, you can display or hide additional buttons. → *"Displaying or hiding additional buttons", Page 19*
Prewash	■ Activate ■ Deactivate	Activate or deactivate prewash, e.g. for washing heavily soiled laundry. **Note:** If the intelligent dosing system is activated, the detergent will be dispensed automatically for the prewash and the main wash. If the intelligent dosing system is deactivated, place the detergent directly in the drum for the prewash and into the manual dosing compartment for the main wash. → *Page 17*
Extra Rinse	■ Activate ■ Deactivate	Activate or deactivate an additional rinse cycle. Recommended for particularly sensitive skin or in regions with very soft water.
Night Wash	■ Activate ■ Deactivate	Activate or deactivate quiet operation, e.g. for operation at night. The operating signals and the information signals are deactivated and the appliance is adjusted for quiet operation, e.g. by reduced drum movement.

9 Programmes

Notes

- The laundry's care labels provide you with additional information about programme selection.
  → *"Care symbols on the care labels", Page 31*
- The programme's temperature setting guarantees that the recommended temperature on the care label is not exceeded. The temperature that is reached in the appliance may differ from the set temperature. This means that the best possible washing performance is achieved with optimal energy efficiency.
- Additional functions may be available as a result of software updates.
  → *Page 37*
  If a software update is available, you can find further information in the Home Connect app.

Programme	Description	Max. load (kg)
Cottons	Wash hard-wearing items made from cotton or linen. Also suitable as a short programme for normally soiled laundry when you activate SpeedPerfect. Programme setting: ■ Max. 90 °C ■ Max. 1400 rpm	10.0 5.0 [1]
Cottons Eco	Wash hard-wearing items made from cotton or linen. Energy-saving programme. **Note:** To save energy, the actual washing temperature may deviate from the set washing temperature. The washing performance meets legal requirements. Programme setting: ■ Max. 90 °C ■ Max. 1400 rpm	10.0
Synthetics	Wash items made from synthetic fabrics. Programme setting: ■ Max. 60 °C ■ Max. 1400 rpm	4.0

[1] **SpeedPerfect** activated
[2] Washing not possible

Programme	Description	Max. load (kg)
Daily Wash	Wash items made from cotton, linen or synthetic fabrics. Suitable for lightly soiled laundry. Programme setting: ■ Max. 60 °C ■ Max. 1400 rpm	4.0
Delicates/Silk	Wash delicate, washable items made from silk, viscose and synthetic fabrics. Use a detergent that is suitable for delicates or silk. **Note:** Wash especially delicate items or items with hooks, eyelets or clips in a mesh laundry bag. **Tip:** Gently cleaning the laundry reduces abrasion of textile fibres and microplastic fibres. Programme setting: ■ Max. 40 °C ■ Max. 800 rpm	2.0
Wool	Hand- or machine-washable items that are made from wool or contain wool. To prevent the laundry from shrinking, the drum moves the items very gently with long pauses. Use a detergent that is suitable for wool. Programme setting: ■ Max. 40 °C ■ Max. 800 rpm	2.0
Rinse	Rinse and then spin the laundry, and drain the water. Programme setting: Max. 1400 rpm	–
Spin/Drain	Spin the laundry and drain the water. If you only want to drain the water, activate 0. The laundry is not spun. Programme setting: Max. 1400 rpm	–
App	Select additional programmes directly via the Home Connect app. A description of the programmes can be found in the Home Connect app. **Note:** Your appliance must be connected to your home network and registered in your Home Connect app. → *Page 36*	–

[1] **SpeedPerfect** activated
[2] Washing not possible

Programme	Description	Max. load (kg)
Hygiene Plus	Wash hard-wearing items made from cotton or linen. Suitable for allergy sufferers and for strict hygiene requirements. **Note:** Once the set temperature has been reached, it remains constant throughout the entire washing process. Programme setting: ■ Max. 60 °C ■ Max. 1400 rpm	6.5
Steam	Suitable for shirts, T-shirts and similar fabrics made from cotton or linen. Programme for warming and steaming dry items using steam in order to hang them up once the programme has ended or to make them easier to iron. The programme's maximum load is five shirts or five t-shirts. Activate SpeedPerfect if you only want to steam one item of laundry. **Notes** ■ Immediately after the programme ends, hang up the warm, steamed items or iron them. ■ The laundry is not washed or cleaned. Do not use any detergent or cleaning products. ■ The steam is hot and may cause damage to certain fabrics or fabric types. The programme is therefore not suitable for outdoor clothing or items made from silk or wool, such as jumpers.	–[2]
Automatic 40°C	Wash hard-wearing items made from cotton or synthetic fabrics. The degree of soiling and the type of fabric are automatically detected. The washing process is adapted. **Note:** The temperature and spin speed cannot be adjusted in this programme and are set automatically. The maximum temperature is 40 °C. The maximum spin speed is 1400 rpm.	6.0

[1] **SpeedPerfect** activated
[2] Washing not possible

Programme	Description	Max. load (kg)
Duvet	Wash pillows or quilts stuffed with synthetic fibres or down fillings. Wash large items separately. Use a detergent that is suitable for down or delicates. Use sparingly. Do not use fabric softener. **Note:** To prevent excessive foaming, remove air from laundry items by rolling them up before you wash them. Programme setting: ■ Max. 60 °C ■ Max. 1200 rpm	2.5
Super-Quick 15'/30'	Wash items made from cotton or synthetic fabrics. Short programme for small items of lightly soiled laundry. The programme duration is approx. 30 minutes. If you wish to reduce the programme duration to 15 minutes, activate SpeedPerfect. The maximum load is reduced to 2.0 kg. Programme setting: ■ Max. 40 °C ■ Max. 1200 rpm	4.0 2.0[1]

[1] **SpeedPerfect** activated
[2] Washing not possible

10 Accessories

Use original accessories. These have been made especially for your appliance.

Tip: Some accessories are available in other colours. Contact customer service. → *Page 53*

	Use	Order number
Water inlet hose extension	Extend the water inlet hose for cold water or AquaStop (approx. 2.50 m).	WMZ2381
Water outlet hose extension	Extend the water outlet hose (2.20 m).	11057910
Fixing brackets	Improves the stability of the appliance.	WMZ2200
Elbow	Secure the water outlet hose in place.	00655300
Platform	Install the appliance at a raised height so that it can be easily loaded and unloaded.	WMZP-W20W
Washing machine cleaners	Cleaning products for maintaining the appliance interior.	00311928

11 Laundry

11.1 Preparing the laundry

ATTENTION!
Objects remaining in the laundry may damage the laundry and the drum.
- ▸ Remove all items from any pockets in your laundry before using the appliance.

Note
The appliance and fabrics are protected when you prepare your laundry.
- Brush off sand and soil
- Sort the laundry according to colour and textiles and observe the care labels
- Close all zips, hook and loop fasteners, hooks and eyes
- Tie cloth belts, cloth straps and cords together
- Remove curtain fittings and lead strips
- Wash small or particularly delicate items in a mesh washing bag
- Wash large and small items of laundry together
- Wash laundry with fresh stains immediately
- Pretreat laundry with dried stains and wash several times
- Load the laundry unfolded into the drum
- Before loading the drum, any laundry that has been pre-treated with chlorine bleach should be rinsed several times

11.2 Care symbols on the care labels

Washing care symbols

Symbol	Recommended programme
95 60 40 30	Cottons (normal)
60 40 30	Easy Care (gentle)
40 30	Delicates/Silk for washing by hand (particularly gentle)
	Woollens (hand wash)
	(not suitable for machine-washing)

12 Detergents and care products

You can protect your appliance and your laundry by selecting and using the correct detergents and care products.
The manufacturer's instructions for use and dosage can be found on the packaging.

Notes

- When using liquid detergents, only use liquid detergents that are self-flowing
- Do not mix different liquid detergents
- Do not mix detergent and fabric softener
- Do not use products that have expired or are highly congealed
- Do not use products containing solvents, caustic agents or volatile substances
- Do not use chlorine bleach
- Do not use dyes regularly as fixing salt can damage stainless steel
- Do not use color-bleaching agents in the appliance
- Do not pour vinegar into the dispensers → *Page 34* of the intelligent dosing system

13 Basic operation

13.1 Switching on the appliance

Note: If you switch the appliance on the first time after you have connected it to the electrical system, the switch-on process takes up to one minute.

Requirement: The appliance has been correctly installed and connected. → *Page 11*

- ▸ Press ⏻.
  The switch-on process takes a few seconds.
- ✔ An audible function test is carried out.

Note: The lighting for the drum goes out automatically.

13.2 Setting a programme

1. Press the required programme. → *"Programmes", Page 26*

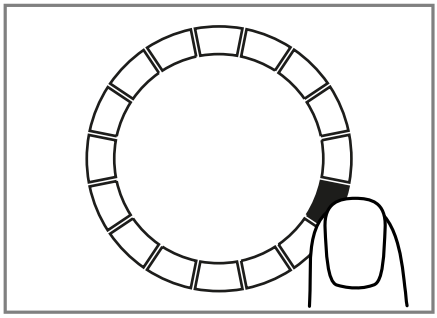

- ✔ The display shows the programme settings.

2. Adjust the programme settings.
   → *"Buttons", Page 23*

   Observe the information about operating logic → *Page 18*.
   The programme settings are not saved permanently for the programme.

Note: The setting is saved if you activate or deactivate the intelligent dosing system.

Setting additional programmes

Requirement: Home Connect is set up. → *Page 36*

1. Set the **App** programme.
✔ **Remote Start** flashes.
2. Press **Remote Start**.
✔ The Home Connect app displays the programmes that can be selected.
3. Set a programme in the Home Connect app.
4. If required, adjust the programme settings.
   → *"Buttons", Page 23*
5. Start the programme. → *Page 32*

13.3 Opening the door

1. Grip under the door handle and pull on the door.

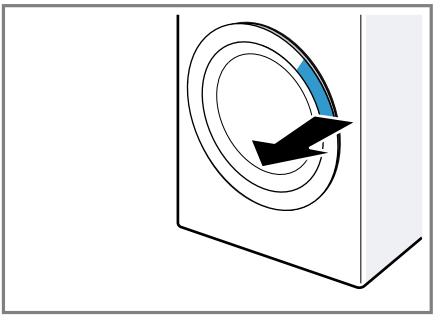

2. Open the door.

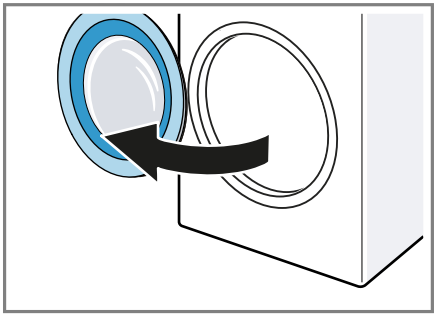

13.4 Loading laundry

Note: To prevent creasing, note the maximum load for the programmes.
→ *"Programmes", Page 26*

Requirements
- The laundry is prepared and sorted.
  → *"Laundry", Page 30*
- The drum is empty.

1. Open the door. → *Page 32*
2. Place the laundry in the drum.
3. Close the door.

   Ensure that there is no laundry trapped in the door.

13.5 Starting the programme

Note: If the intelligent dosing system is activated, make sure that the dispensers have been filled → *Page 34* and the basic dosage has been set → *Page 35*.

Requirement: A programme is set.
→ *Page 31*

▸ Press II ▷.
✔ The drum rotates and load detection takes place. This can take up to 2 minutes, after which water enters the drum.

- ✔ The display shows the programme duration or the programme end time.
- ✔ After the programme has ended, the display shows: **End**.

13.6 Soaking laundry

Note: No additional detergent is required for soaking. The appliance uses the filled detergent for soaking and washing.

Requirements

- The laundry is placed in the appliance. → *Page 32*
- A programme has started. → *Page 32*

1. Press II ▷ approx. 10 minutes after the programme start.

   The programme pauses and the laundry can soak.
2. Press II ▷ after the required soaking time.

13.7 Adding laundry

After the programme starts, you can remove or add laundry depending on the programme status.

1. Press II ▷.

   The appliance pauses.

   Note: If you want to add laundry, follow the instructions on the display. → *"Display", Page 21*
2. Open the door. → *Page 32*
3. Add or remove laundry.
4. Close the door.
5. Press II ▷.

13.8 Cancelling the programme

1. Press II ▷.
2. Open the door. → *Page 32*

   The appliance door remains locked for safety reasons if the temperature and water levels are high.
   - If the temperature is high, start the **Rinse** programme.
   - If the water level is high, start the **Spin** programme or select a suitable programme for draining. → *"Programmes", Page 26*
3. Remove the laundry. → *Page 33*

13.9 Resuming the programme when the programme status is Rinse Hold

Requirements

- Rinse Stop is activated. → *"Buttons", Page 24*
- The last rinse cycle of the set programme has ended and the laundry is in the rinsing water.

1. Set the **Spin** programme or a programme for draining the water. → *Page 26*
2. Press II ▷.

13.10 Unloading the laundry

1. Open the door. → *Page 32*
2. Remove the laundry from the drum.

13.11 Put the appliance into standby mode

1. Press ⏻.
2. Cleaning the rubber gasket. → *Page 43*

Note: Leave the appliance door and the detergent drawer open to dry.

14 Childproof lock

Secure your appliance against being operated unintentionally using the controls.

14.1 Activating the childproof lock

- Press and hold **3 sec.** for approx. 3 seconds.
- ✔ The control elements are locked.
- ✔ The childproof lock also remains activated when the appliance is in standby mode and in the event of a power cut.

14.2 Deactivating the childproof lock

Requirement: To deactivate the childproof lock, the appliance must be switched on.

- Press and hold **3 sec.** for approx. 3 seconds.

15 Intelligent dosing system

The appliance's intelligent dosing system is activated at the factory and automatically doses liquid detergent and fabric softener for any programmes in which intelligent dosing is possible.

Note: You can use the buttons → *Page 23* to deactivate the intelligent dosing system, e.g. in order to manually dose washing powder → *Page 35*.

15.1 Pouring liquid detergent and fabric softener into the dispensers

If you are using the intelligent dosing system or if the appliance displays a notification during operation of the appliance, fill the dispensers.

Notes

- Only pour suitable liquid detergent and fabric softener into the dispensers. → *Page 31*
- If you add more liquid detergent or fabric softener to the dispenser, use the same product.
- If you want to replace the liquid detergent or fabric softener in the dispenser with another product, clean the detergent drawer beforehand → *Page 39*.
- If you are using the intelligent dosing system, do not add additional detergent or fabric softener into the compartment for manual dosing. This is to prevent overdosing or foam formation.

1. Pull out the detergent drawer.

2. Open the lid and pour liquid detergent ◊ and fabric softener ❀ into the relevant dispensers
→ *Page 17*.

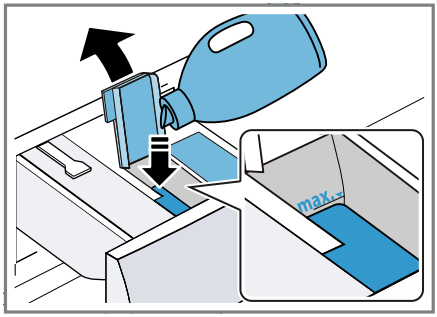

Do not exceed the marking for the maximum fill level when filling.

Note: You can also use both dispensers for liquid detergent. Adapt the dispenser for this. → *Page 35*

3. Close the lid.

Note: To prevent the liquid detergent or fabric softener from drying out, close the lids immediately after filling.

4. Push in the detergent drawer.

15.2 Using the manual dosing compartment

If you are not using the intelligent dosing system, if intelligent dosing is not possible for a programme, or if you want to add additional care product, e.g. stain remover or starch, use the manual dosing compartment.

Note: Observe the information about detergents and care products
→ *Page 31*.

1. Pull out the detergent drawer.
2. Pour laundry detergent or care product into the manual dosing compartment → *Page 17*.
3. Push in the detergent drawer.

15.3 Adapting the ❀/◊ dispenser

The ❀/◊ dispenser can dose fabric softener ❀ or liquid detergent ◊. When it leaves the factory, the dispenser is set for fabric softener. If you want to automatically dose a second liquid detergent, adapt the dispenser.

Notes

- If you adapt the contents of the dispenser, the basic dosage for this dispenser is reset.
- If you use both dispensers for liquid detergent, you must set a dispenser which is to be used during washing.
→ *"Buttons", Page 23*

1. Press and hold **i-DOS 2** for approx. 3 seconds.
2. Press **i-DOS 2** repeatedly until the display shows ◊ (liquid detergent) or ❀ (fabric softener).
3. Wait briefly to save the setting.

15.4 Setting the basic dosage amount

To allow for intelligent dosing, set the basic dosage amount for the dispenser. The basic dosage amount corresponds to the dosage recommendation from the detergent manufacturer on the packaging. Set the basic dosage amount that corresponds to the dosage recommendation for 4.5 kg of normally soiled laundry. In doing so, note the water hardness.

Tip: You can also set the basic dosage amount in the Home Connect app.

1. Press and hold **i-DOS 1** for approx. 3 seconds.
✔ The display shows the set basic dosage amount.
2. To adjust the setting, press ∧/∨.
3. Wait briefly to save the setting.

Note: To set the basic dosage amount for the other dispenser, repeat the steps with **i-DOS 2**.

16 Home Connect

This appliance is network-capable. Connecting your appliance to a mobile device lets you control its functions via the Home Connect app, adjust its basic settings and monitor its operating status.
The Home Connect services are not available in every country. The availability of the Home Connect function depends on the availability of Home Connect services in your country. You can find information about this at: www.home-connect.com.

The Home Connect app guides you through the entire login process. Follow the instructions in the Home Connect app to configure the settings.

Tip: Please also follow the instructions in the Home Connect app.

Notes
- Please note the safety precautions in this instruction manual and make sure that they are also observed when operating the appliance via the Home Connect app.
→ *"Safety", Page 4*
- Operating the appliance on the appliance itself always takes priority. During this time it is not possible to operate the appliance using the Home Connect app.

16.1 Setting up the Home Connect app

1. Install the Home Connect app on your mobile device.
2. Start the Home Connect app and set up access for Home Connect.
   The Home Connect app guides you through the entire login process.

16.2 Setting up Home Connect

Requirements
- The Home Connect app has been installed on your mobile device.
- The appliance is receiving signals from the WLAN home network (Wi-Fi) at its installation location.

1. Press and hold **Remote Start** for approx. 3 seconds.
2. Follow the instructions in the Home Connect app.

16.3 Activating Wi-Fi on the appliance

1. Press and hold **Remote Start** for approx. 3 seconds.
2. Press **Remote Start** repeatedly until the display shows "oFF".
3. Press II ▷ to activate the Wi-Fi.
✔ The display shows "on".

Notes
- If the Wi-Fi is activated, the display alternately shows "on" and the signal strength of the Wi-Fi connection.
- To exit the Home Connect settings, press and hold **Remote Start** for approx. 3 seconds.

16.4 Deactivating Wi-Fi on the appliance

1. Press and hold **Remote Start** for approx. 3 seconds.
2. Press **Remote Start** repeatedly until the display shows "on".
3. Press II ▷ to deactivate the Wi-Fi.

✔ The display shows "oFF".

Note: To exit the Home Connect settings, press and hold **Remote Start** for approx. 3 seconds.

16.5 Installing the software update

Note: If a software update is available, a message appears in the Home Connect app.

- ▸ To install the software update, follow the instructions in the Home Connect app.

✔ The control panel is partially locked during the installation.

✔ In the event of a malfunction, installation may take up to 40 minutes. Do not reset the network settings or the appliance to the factory settings.

16.6 Resetting the appliance network settings

1. Press and hold **Remote Start** for approx. 3 seconds.
2. Press **Remote Start** repeatedly until the display shows "rES".
3. Press and hold II ▷ for approx. 3 seconds.

✔ The network settings are reset.

16.7 Remote start

Enable the appliance for remote start via the Home Connect app.

Note
Remote start will be deactivated in the following circumstances:

- The appliance door is opened.
- **Remote Start** is pressed.
- Following a power cut.

Activating remote start

Requirements

- The appliance door is closed.
- The detergent drawer has been pushed in.

- ▸ Press **Remote Start**.

✔ **Remote Start** lights up and the appliance is enabled for remote start via the Home Connect app.

Deactivating remote start

- ▸ Press **Remote Start**.

✔ **Remote Start** goes out.

16.8 Remote diagnostics

Customer Service can use Remote Diagnostics to access your appliance if you contact them, have your appliance connected to the Home Connect server and if Remote Diagnostics is available in the country in which you are using the appliance.

Tip: For further information and details about the availability of Remote Diagnostics in your country, please visit the service/support section of your local website: www.home-connect.com.

16.9 Data protection

Please see the information on data protection.
The first time your appliance is registered on a home network connected to the Internet, your appliance will transmit the following types of data to the Home Connect server (initial registration):

- Unique appliance identification (consisting of appliance codes as well as the MAC address of the Wi-Fi communication module installed).
- Security certificate of the Wi-Fi communication module (to ensure a secure data connection).
- The current software and hardware version of your appliance.
- Status of any previous reset to factory settings.

This initial registration prepares the Home Connect functions for use and is only required when you want to use the Home Connect functions for the first time.

Note: Please note that the Home Connect functions can only be utilised with the Home Connect app. Information on data protection can be retrieved in the Home Connect app.

17 Basic settings

You can configure the basic settings for your appliance to meet your needs.

Note: You can also adjust the basic settings in the Home Connect app.

17.1 Overview of the basic settings

Note: Additional functions may be available as a result of software updates. → *Page 37*
If a software update is available, you can find further information in the Home Connect app.

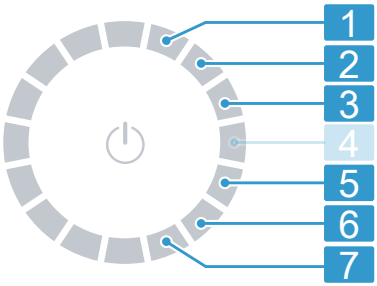

Programme selector with programme positions

1	Set the volume of the signal at the end of the programme: 0 (off) to 4 (very loud)
2	Set the volume of the signal tone emitted when the buttons are pressed: 0 (off) to 4 (very loud)
3	Set the display brightness: 1 (low) to 4 (very high)
5	Activate (on) or deactivate (oFF) the reminder to clean the drum.
6	Display the number of finished programmes (PC).
7	Restore the appliance to the factory settings (rES).

17.2 Changing the basic settings

Requirement: The display shows all additional buttons. → *Page 19*

1. To call up the basic settings, press ⚙ **Basic Settings**.
2. Use the programme selector to select the required basic setting. → *Page 38*
3. Adjust the basic setting:
   - To change the value, press ∧ or ∨.
   - To reset the appliance to the factory settings, press and hold II ▷ for approx. 3 seconds.
4. To exit the basic settings, press ⚙ **Basic Settings**.

18 Cleaning and servicing

To keep your appliance working efficiently for a long time, it is important to clean and maintain it carefully.

18.1 Cleaning the drum

Clean the drum if you have carried out 20 washing cycles at a temperature of 40 °C or lower, if ⊛ flashes, or if you have not used the appliance for a prolonged period, but at least once a year.

⚠ **CAUTION**
Risk of injury!
Permanently washing at low temperatures and a lack of ventilation for the appliance may damage the drum and cause injury.
- Regularly run a programme for cleaning the drum or wash at temperatures of at least 60 °C.
- Leave the appliance to dry after every operation with the door open, and leave the detergent drawer to dry.
- Select the **Cottons 90 °C** ✿ programme or the drum cleaning programme in the Home Connect app.

  Run the programme without laundry but with washing powder that contains oxygen bleach or a cleaning agent for caring for the inside of the appliance.

18.2 Cleaning the detergent drawer

If you want to replace the liquid detergent or fabric softener in the dispenser with another product or if the detergent drawer is dirty, clean the detergent dispenser.

ATTENTION!
The pump unit contains electrical components. Electrical components may be damaged if they come into contact with liquids.
- Do not clean the pump unit in the dishwasher and do not immerse it in water.
- Protect the electrical connection on the rear against water, detergent and fabric softener residue.

1. Put the appliance into standby mode. → *Page 33*
2. Pull out the detergent drawer.
3. Press down on the insert and remove the detergent drawer.

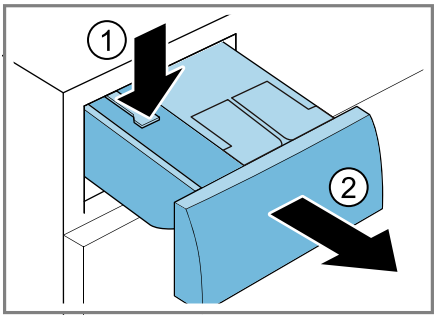

4. Remove the pump unit.

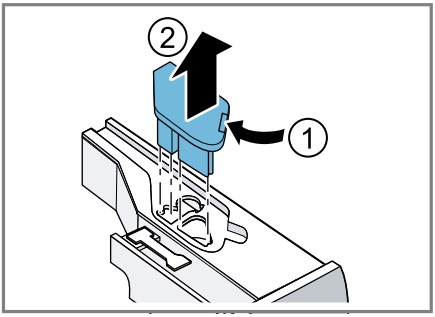

5. Unclip the detergent drawer cover and remove it.

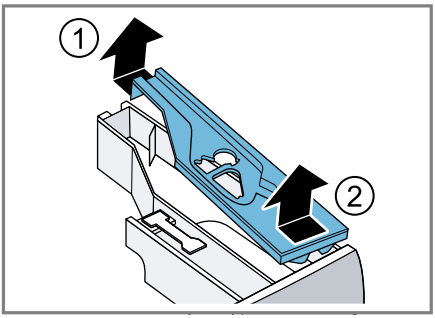

6. Empty the detergent drawer.

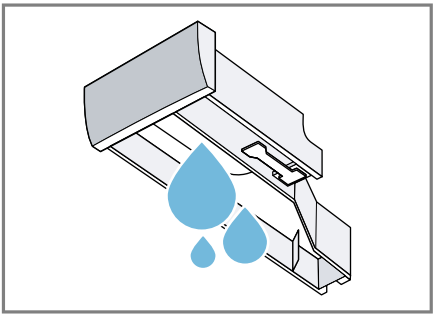

7. Clean the pump unit with a damp cloth.

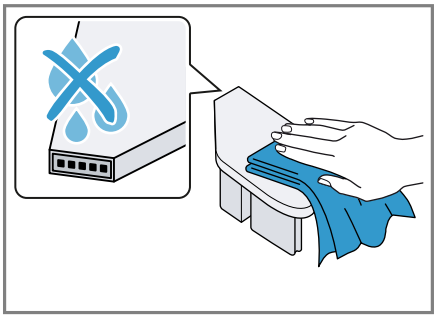

8. Clean the detergent drawer and the cover with a soft, damp cloth or hand shower.

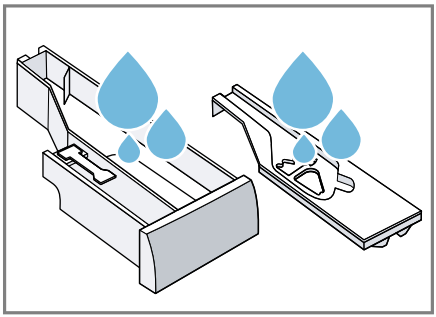

9. Dry the detergent drawer, cover and pump unit and reinsert them.

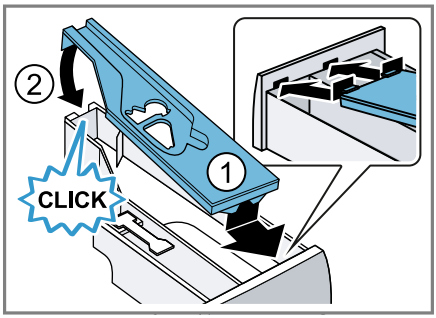

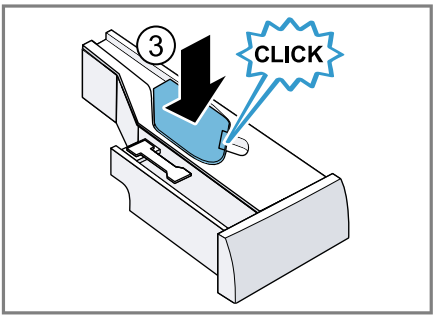

10. Clean the housing of the detergent drawer in the appliance.

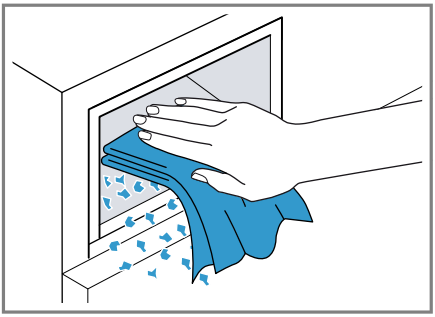

11. Push in the detergent drawer.

18.3 Cleaning the drain pump

Clean the drain pump regularly, at least once a year, as well as in the event of faults, e.g. blockages or rattling noises.

Emptying the drain pump

1. Turn off the tap.
2. Put the appliance into standby mode. → *Page 33*
3. Disconnect the appliance's mains plug from the power supply.
4. Open and remove the maintenance flap.

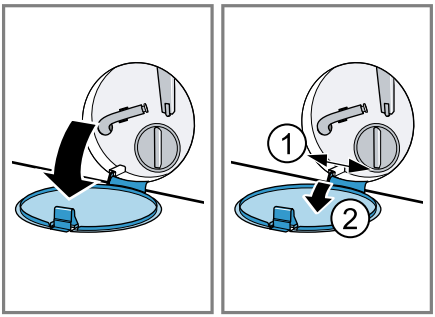

5. Slide a suitable receptacle under the opening for draining the detergent solution.

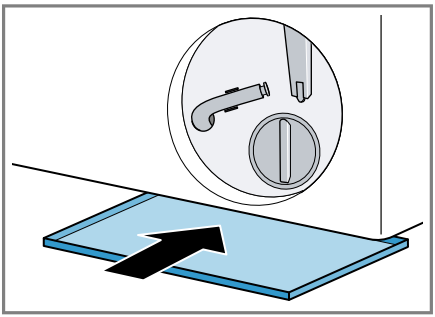

6. Take the drain hose out of the holder.

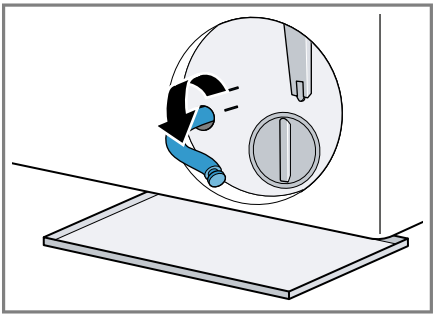

7. ⚠ **CAUTION - Risk of scalding!**
When you wash at high temperatures, the detergent solution gets hot.
- Do not touch the hot detergent solution.

To allow the detergent solution to flow out into the container, remove the sealing cap.

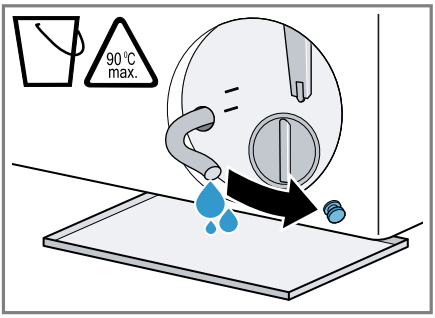

8. Once emptied, press firmly on the locking cap.

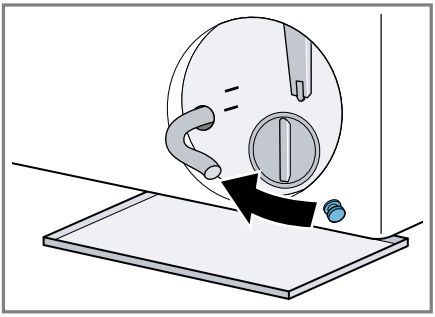

9. Insert the drain hose into the holder.

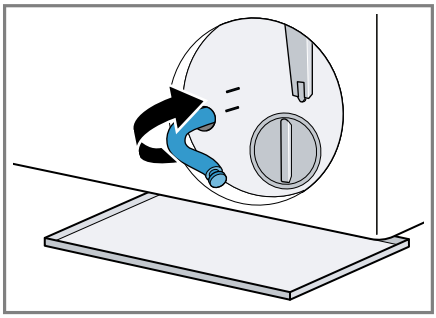

Cleaning the drain pump

Requirement: The drain pump is empty. → *Page 41*

1. Since water may remain in the drain pump, unscrew the pump cap carefully.
   – The filter insert in the pump housing may become stuck due to coarse particles of dirt. Loosen the dirt and remove the filter insert.

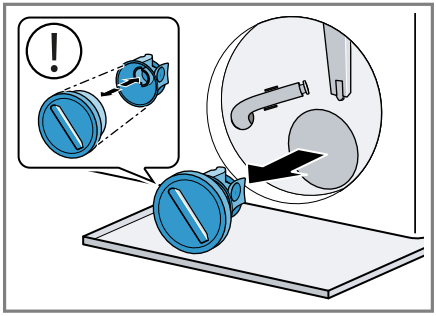

The pump cap is comprised of two parts which can be taken apart for cleaning.

2. Clean the interior, the thread on the pump cap and the pump housing.

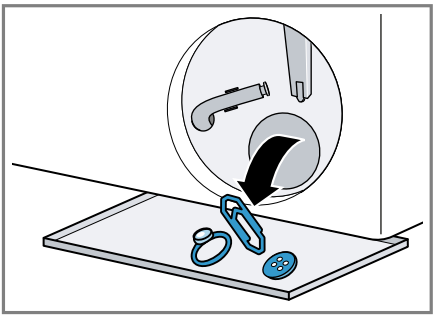

3. Ensure that both impellers can turn.

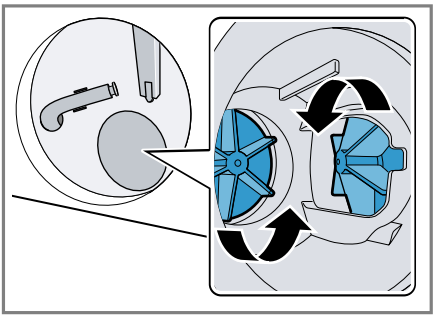

4. Insert the pump cap.
   – Ensure that the parts of the pump cap are correctly assembled.

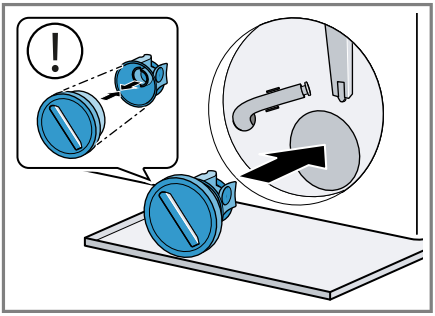

5. Screw the pump cap as far as it will go.

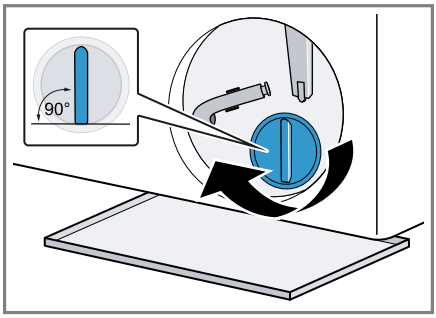

The handle on the pump cap must be in a vertical position.

6. Insert and close the maintenance flap.

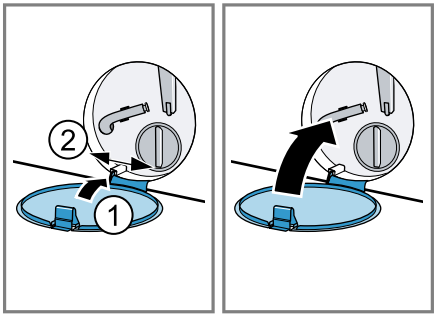

18.4 Cleaning the rubber gasket

Clean the rubber gasket regularly.

1. Open the door. → *Page 32*

2. Remove any foreign objects and fluff from the rubber gasket.

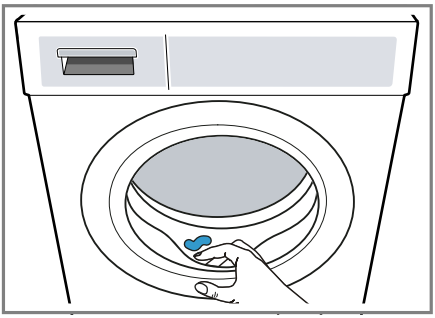

3. Remove any blockages from the intake opening.

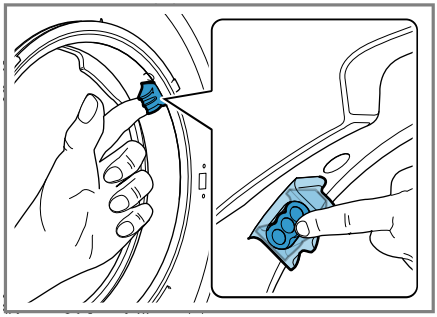

4. Clean the outside and the inside of the rubber gasket with a damp cloth and wipe dry.

19 Troubleshooting

You can rectify minor faults on your appliance yourself. Read the troubleshooting information before contacting after-sales service. This will avoid unnecessary costs.

⚠ **WARNING**

Risk of electric shock!

Improper repairs are dangerous.

- Never make any technical modifications to the appliance or its features.
- Repairs to the appliance should only be carried out by trained specialist staff.
- Only use genuine spare parts when repairing the appliance.
- If the power cord of this appliance is damaged, it must be replaced by the manufacturer, the manufacturer's Customer Service or a similarly qualified person in order to prevent any risk.

Fault	Cause and troubleshooting
The display goes out and II ▷ flashes.	Energy-saving mode is active ▸ Press II ▷.
E:36 -10 / E:30 -80 The detergent solution is not being pumped out.	The water outlet hose is connected too high, is kinked or trapped, or has been extended impermissibly. ▸ Check the installation of the water outlet hose. → *Page 14*
	Drain pipe or water outlet hose is blocked. ▸ Clean the drain pipe and the water outlet hose.
	The drain pump is blocked or the pump cover is not installed correctly. ▸ Check that the pump cover is installed correctly. → *Page 41* ▸ Clean the drain pump. → *Page 41*
	Detergent dosage is too high. ▸ If intelligent dosing is activated, reduce the basic dosage. → *Page 35* ▸ If you dose manually, reduce the amount of detergent for the next washing cycle with the same load.
	▭ is activated. ▸ Start the ⊚ **Spin** programme or a suitable draining programme. → *Page 26*
E:36 -25 -26	Drain pump is blocked. ▸ Clean the drain pump. → *Page 41*

Fault	Cause and troubleshooting
E:38 -25 -26	Drain pump is blocked. 1. Clean the drum. → *Page 39* 2. If the fault persists, clean the drain pump. → *Page 41*
	Inlet opening of the rubber gasket is blocked. ▸ Clean the inlet opening in the rubber gasket.
E:10 -00 -10 -20	The pump for the intelligent dosing system is blocked. 1. Clean the detergent drawer. → *Page 39* 2. If the fault persists, call customer service. → *Page 53* **Note:** Until the fault is rectified, you can deactivate the intelligent dosing system and dose manually. → *Page 23*
H:32	The appliance has interrupted the spin cycle because the laundry is unevenly distributed. ▸ Redistribute the laundry in the drum.
E:30 -10 /	The tap is turned off. ▸ Turn on the tap.
	The water inlet hose is kinked or jammed. ▸ Check the installation of the water inlet hose. → *Page 14*
	The filter in the water inflow is blocked. ▸ Clean the filter in the water inflow.
	The water pressure is low. ▸ Check whether the tap has sufficient water pressure.
	The water level measuring system is defective. With this error message, the appliance starts a draining process. 1. Wait approx. 5 minutes until the draining process ends. 2. Restart the appliance. If required, start the draining process again. 3. If the fault persists, call customer service. → *Page 53*
E:35 -10	The appliance is leaking. 1. Turn off the water tap. 2. Call customer service. → *Page 53*

Fault	Cause and troubleshooting
E:30 -20	Critical malfunction. ▸ Turn off the water tap. With this error message, the appliance starts a draining process. **1.** Wait approx. 5 minutes until the draining process ends. **2.** Restart the appliance. If required, start the draining process again. **3.** If the fault persists, call customer service. → *Page 53*
	Detergent dosage is too high. ▸ If you dose manually, reduce the amount of detergent for the next washing cycle with the same load.
	Additional water has been added. ▸ Do not add any extra water to the appliance while it is operating.
All other error codes.	Malfunction **1.** To restart the appliance, press and hold ⏻ for approximately 5 seconds. **2.** If the fault occurs again, disconnect the appliance from the power supply for at least 30 seconds. Unplug the appliance from the mains or switch off the circuit breaker in the fuse box. **3.** If the fault persists, call customer service. → *Page 53* Please specify the exact error message when calling. If possible, document the fault with photos and videos.
	The detergent drawer has not been pushed in fully. ▸ Push in the detergent drawer.
	The pump unit is not inserted correctly. ▸ Check that the pump unit is inserted correctly. → *Page 39*

Fault	Cause and troubleshooting
or heavy foam build-up.	Detergent dosage is too high. ▸ Mix one tablespoon of fabric softener with 0.5 litres of water and pour the mixture into the compartment for manual dosing (not for outdoor clothing, sportswear or items stuffed with down). ▸ If intelligent dosing is activated, reduce the basic dosage. → *Page 35* ▸ If you dose manually, reduce the amount of detergent for the next washing cycle with the same load.
	Drum cleaning is required. ▸ Clean the drum. → *Page 39*
The display and buttons do not respond.	Software fault. 1. To restart the appliance, press and hold ⏻ for approximately 5 seconds. 2. If the fault occurs again, disconnect the appliance from the power supply for at least 30 seconds. Unplug the appliance from the mains or switch off the circuit breaker in the fuse box.
Home Connect is not working properly.	Different causes are possible. 1. Reset the appliance network settings. → *Page 37* 2. Set up Home Connect again. → *Page 36* ▸ Go to www.home-connect.com.
i-DOS 1/**i-DOS 2** cannot be pressed.	The selected programme or programme progress does not allow intelligent dosing. ▸ Use the manual dosing compartment. → *Page 35*
The programme does not start.	Childproof lock is activated. ▸ Deactivate the childproof lock. → *Page 34*
	Finished in is activated. ▸ Check whether **Finished in** is activated. → *Page 24*
	The detergent drawer has not been pushed in fully. ▸ Push in the detergent drawer.
The programme is paused or has been interrupted, but the door will not open.	The temperature is too high. ▸ Start the **Rinse** programme or wait until the temperature has dropped.
	Water level is too high. ▸ Start the **Spin** programme or a suitable draining programme. → *Page 26*

Fault	Cause and troubleshooting
The door cannot be opened due to a power cut.	The door is locked. ▸ Open the door using the emergency release. → *Page 52*
Drum jerks after the programme starts.	Not a fault. An internal motor test is started. No action required.
Drum rotates, water does not flow in.	Not a fault. Load detection is active for up to 2 minutes. No action required.
No water is visible in the drum.	Not a fault. Water is below the visible area. No action required.
The spin cycle runs several times.	Not a fault. The appliance eliminates an imbalance by repeatedly redistributing the laundry. No action required.
The appliance is vibrating, 'wandering' and making loud noises during the spin cycle.	Appliance is not correctly aligned. ▸ Align the appliance. → *Page 15*
	The appliance feet are not fixed. ▸ Secure the appliance's feet. → *Page 15*
	Transit bolts have not been removed. ▸ Remove the transit bolts.
High spin speed not reached.	The appliance is using a reduced spin speed to eliminate an imbalance. No action required.
The programme duration changes during the wash cycle.	Not a fault. The programme sequence is optimised electronically, another rinse cycle is switched on due to heavy foam build-up, or an imbalance is eliminated. No action required.
Whooshing, hissing, whirring or sucking noises.	Not a fault. Water is pumped in, detergent and fabric softener is dosed, function tests are performed, or detergent solution is pumped out. No action required.
Banging noises, rattling in the drain pump.	A foreign object is in the drain pump. ▸ Clean the drain pump. → *Page 41*
Insufficient cleaning or detergent residues on the laundry.	Detergents may contain water-insoluble substances that deposit on the laundry. ▸ Start the **Rinse** programme or brush out the laundry after drying.
	The detergent in the dispenser is unsuitable or thickened. **1.** Check whether the detergent is suitable. → *Page 31*

Fault	Cause and troubleshooting
Insufficient cleaning or detergent residues on the laundry.	2. Check whether the detergent in the dispenser has thickened. 3. If the detergent is unsuitable or has thickened, empty it out and clean the dispenser. → *Page 39*
	The basic dosage is not correctly adjusted. ▸ Set the basic dosage. → *Page 35*
Damp stains have formed on the fabrics after the ♨ **Steam** programme has ended.	Water droplets from the drum or from the door have moistened the fabrics. The drops come from either condensed steam or the residual moisture from the previous wash programme. ▸ Iron the fabrics or hang them up to dry.
The laundry is too wet after the spinning cycle.	A low spin speed is selected. ▸ Start the ◎ **Spin** programme. ▸ The next time you run a wash cycle, set a higher spin speed.
	The appliance is using a reduced spin speed to eliminate an imbalance. 1. Redistribute the laundry in the drum. 2. Start the ◎ **Spin** programme.
Creasing.	The selected programme is unsuitable for the type of fabric. ▸ Set a suitable programme. → *Page 26*
	A high spin speed is selected. ▸ The next time you run a wash cycle, set a lower spin speed.
	The load is unsuitable. ▸ Observe the programme's maximum load capacity. → *Page 26* ▸ Prepare the laundry. → *Page 30*
Water is leaking out at the water inlet hose.	The water inlet hose is not correctly connected or is damaged. ▸ Check the installation of the water inlet hose. → *Page 11* In the event of damage, call customer service. → *Page 53*
Water is leaking out at the water outlet hose.	The water outlet hose is not connected correctly or is damaged. ▸ Check the installation of the water outlet hose. → *Page 11* Replace the water outlet hose if it is damaged.

Fault	Cause and troubleshooting
Water is leaking from below the door.	Dirt on the door or seal causes leaks. ▸ Clean the door and the seal.
Odours have formed in the appliance.	Humidity and detergent residue may promote the formation of bacteria. ▸ Clean the drum. → *Page 39* ▸ If you are not using the appliance, leave the door and detergent drawer open so that residual water can evaporate.

19.1 Emergency release

Releasing the door

Requirement: The drain pump is empty. → *Page 41*

1. **ATTENTION!** Escaping water may cause material damage.
   ▸ Do not open the door if you can see water through the glass.

   Pull the emergency release downwards with a tool and release.

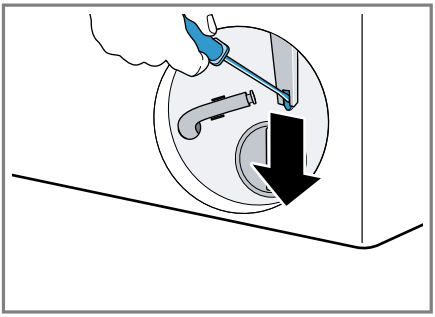

✔ The door lock is released.

2. Insert the maintenance flap and lock it into place.
3. Close the maintenance flap.

19.2 Restart the appliance.

1. To restart the appliance, press and hold ⏻ for approximately 5 seconds.
2. If the fault occurs again, disconnect the appliance from the power supply for at least 30 seconds.

   Unplug the appliance from the mains or switch off the circuit breaker in the fuse box.
3. If the fault persists, call customer service. → *Page 53*

Please specify the exact error message when calling. If possible, document the fault with photos and videos.

20 Transportation, storage and disposal

20.1 Removing the appliance

1. Turn off the tap.
2. Empty the water inlet hose.
3. Put the appliance into standby mode. → *Page 33*
4. Unplug the appliance's mains plug.
5. Drain the water. → *"Cleaning the drain pump", Page 41*
6. Detach the hoses.
7. Empty the dispensers.

20.2 Inserting the transit bolts

Secure the appliance before transportation using transit bolts in order to prevent transport damage.

1. Use a screwdriver to remove the cover caps[1].

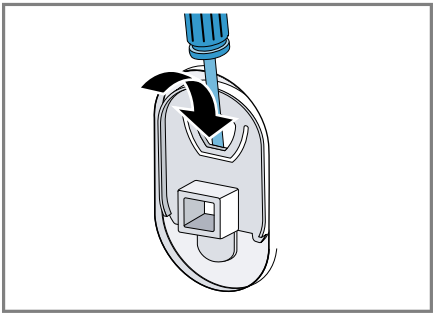

   Retain the cover cap.
2. Insert the 4 transit bolts.

[1] The number of cover caps varies depending on the model.

20.3 Using the appliance again

- For further information, see → *"Installation and connection", Page 11* and → *"Starting an empty washing cycle", Page 16*.

20.4 Disposing of old appliance

Valuable raw materials can be re-used by recycling.

⚠ **WARNING**
Risk of harm to health!
Children can lock themselves in the appliance, thereby putting their lives at risk.
- Do not install the appliance behind a door as this may obstruct the appliance door or prevent it from opening.
- With redundant appliances, unplug the power cord. Then cut through the cord and damage the lock on the appliance door beyond repair so that the appliance door will no longer close.

1. Unplug the appliance from the mains.
2. Cut through the power cord.
3. Dispose of the appliance in an environmentally friendly manner.

   Information about current disposal methods are available from your specialist dealer or local authority.

This appliance is labelled in accordance with European Directive 2012/19/EU concerning used electrical and electronic appliances (waste electrical and electronic equipment - WEEE). The guideline determines the framework for the return and recycling of used appliances as applicable throughout the EU.

21 Customer Service

Detailed information on the warranty period and terms of warranty in your country is available from our after-sales service, your retailer or on our website.
If you contact Customer Service, you will require the product number (E-Nr.), the production number (FD) and the consecutive numbering (Z-Nr.) of your appliance.
The contact details for Customer Service can be found in the enclosed Customer Service directory or on our website.

21.1 Product number (E-Nr.), production number (FD) and consecutive numbering (Z-Nr.)

You can find the product number (E-Nr.), the production number (FD) and the consecutive numbering (Z-Nr.) on the appliance's rating plate.
Depending on the model, the rating plate is located:
- On the inside of the door.
- On the inside of the maintenance flap.
- On the rear of the appliance.

Make a note of your appliance's details and the Customer Service telephone number to find them again quickly.

21.2 AQUA-STOP guarantee

In addition to warranty claims against the seller under the purchase agreement and in addition to our manufacturer's warranty, we offer compensation under the following conditions.

- If our Aqua-Stop system is defective and causes water damage, we will make good the damage for private users. To ensure protection from water damage, the appliance must be connected to the power supply.
- The liability guarantee is valid for the service life of the appliance.
- A claim can only be made under the guarantee if the appliance has been correctly installed and connected with Aqua-Stop according to our instructions; this also includes correctly fitting the Aqua-Stop extension (genuine accessory). Our guarantee does not cover defective supply lines or fittings up to the Aqua-Stop connection on the tap.
- If your appliance is fitted with Aqua-Stop, you can in principle leave your appliance unattended during operation and the tap turned on afterwards. The tap only needs to be turned off if you are away from home for a long period, e.g. on holiday for several weeks.

22 Consumption values

Recommended wash mode for normally soiled clothes at rated load capacity used for the evaluation of the captioned model under the Singapore Mandatory Water Efficiency Labelling Scheme (MWELS) is **Cottons Eco** 60 °C.

23 Technical data

Appliance height	84.5 cm
Appliance width	59.8 cm
Appliance depth	59.0 cm
Appliance depth with door closed	64.8 cm
Appliance depth with door open	109.0 cm
Weight	82.6 kg
Maximum load	10.0 kg
Mains voltage	220-240 V, 50 Hz
Minimum installation protection	10 A
Nominal power	2300 W
Water pressure	▪ Minimum: 100 kPa (1 bar) ▪ Maximum: 1000 kPa (10 bar)
Length of the water inlet hose	150 cm
Length of the water outlet hose	150 cm
Length of the power cord	210 cm

23.1 Information regarding Free and Open Source Software

This product includes software components that are licensed by the copyright holders as free or open source software.
The applicable licence information is stored on your home appliance. You can also access the applicable licence information via your
Home Connect app: "Profile -> Legal information -> Licence Information".[1]
You can download the licence information on the brand product website. (Please search on the product website for your appliance model and additional documents). Alternatively, you can request the relevant information from oss-request@bshg.com or BSH Hausgeräte GmbH, Carl-Wery-Str. 34, 81739 Munich, Germany.
The source code will be made available to you on request.
Please send your request to oss-request@bshg.com or BSH Hausgeräte GmbH, Carl-Wery-Str.34, 81739 Munich, Germany.
Subject: „OSSREQUEST“
The cost of performing your request will be charged to you. This offer is valid for three years from the date of purchase or at least as long as we offer support and spare parts for the relevant appliance.

24 Declaration of Conformity

BSH Hausgeräte GmbH hereby declares that the appliance with Home Connect functionality conforms to the essential requirements and other relevant provisions of Directive 2014/53/EU.
A detailed RED Declaration of Conformity can be found online at www.bosch-home.com among the additional documents on the product page for your appliance.

CE

2.4 GHz band (2400–2483.5 MHz): Max. 100 mW
5-GHz band (5150–5350 MHz + 5470–5725 MHz): max. 150 mW

!	BE	BG	CZ	DK	DE	EE	IE	EL	ES
	FR	HR	IT	CY	LI	LV	LT	LU	HU
	MT	NL	AT	PL	PT	RO	SI	SK	FI
	SE	NO	CH	TR	IS	UK (NI)			
5 GHz WLAN (Wi-Fi): For indoor use only.									

AL	BA	MD	ME	MK	RS	UK	UA
5 GHz WLAN (Wi-Fi): For indoor use only.							

The appliance complies with IMDA Standards DA107373.

[1] Depending on the appliance specifications

Thank you for buying a Bosch Home Appliance!

Register your new device on MyBosch now and profit directly from:

- **Expert tips & tricks for your appliance**
- **Warranty extension options**
- **Discounts for accessories & spare-parts**
- **Digital manual and all appliance data at hand**
- **Easy access to Bosch Home Appliances Service**

Free and easy registration – also on mobile phones:
www.bosch-home.com/welcome

Looking for help? You'll find it here.

Expert advice for your Bosch home appliances, help with problems or a repair from Bosch experts.
Find out everything about the many ways Bosch can support you:
www.bosch-home.com/service
Contact data of all countries are listed in the attached service directory.

BSH Hausgeräte GmbH
Carl-Wery-Straße 34
81739 München, GERMANY
www.bosch-home.com

A Bosch Company

9001857647 (041216)
en