BOSCH

Register your new device on MyBosch now and get free benefits:
bosch-home.com/welcome

MyBosch

Free standing cooker

HGV1D0U59M

[en] User manual and installation instructions

Table of contents

INFORMATION FOR USE

1 **Safety** ... 2

2 **Preventing material damage** ... 6

3 **Environmental protection and saving energy** ... 7

4 **INSTALLATION AND CONNECTION** ... 8

5 **Familiarising yourself with your appliance** ... 11

6 **Accessories** ... 14

7 **Before using for the first time** ... 15

8 **Cookware** ... 15

9 **Operating the hotplate** ... 16

10 **Basic operation** ... 18

11 **Time-setting options** ... 19

12 **Cleaning and servicing** ... 19

13 **Rails** ... 22

14 **Appliance door** ... 23

15 **Top cover** ... 25

16 **Troubleshooting** ... 25

17 **Transportation and disposal** ... 27

18 **Customer Service** ... 27

19 **How it works** ... 27

20 **INSTALLATION INSTRUCTIONS** ... 31

20.1 **General information** ... 31

1 Safety

Observe the following safety instructions.

1.1 Intended use

Read the information on intended use to ensure that you use the appliance correctly and safely.
Appliance class: Class 1
The figures in these instructions are intended for information purposes.
ATTENTION: Observe the applicable regulations and only set up the appliance in well-ventilated rooms. Read through the instructions before setting up and using the appliance.
Warning: The appliance is only used for cooking. Do not use the appliance for other purposes, e.g. for heating up rooms.
Only allow a trained professional to connect the appliance and to convert the appliance to a different type of gas.
The appliance must be installed and the electric and gas connections must be implemented in accordance with the instruction and installation manual.
An incorrect connection or incorrect settings may lead to serious accidents and damage to the appliance.
The appliance manufacturer accepts no liability for damage of this kind.
The appliance's warranty becomes void.
Only a licensed professional may connect appliances without plugs. Damage caused by incorrect connection is not covered under the warranty.
Only use the appliance as follows:

- To prepare meals and drinks.
- Under supervision. Never leave the appliance unattended when cooking for short periods.
- in private households and in enclosed spaces in a domestic environment.
- up to an altitude of max. 2000 m above sea level.

Do not use the appliance:

- On boats or in vehicles.
- as a room heater.
- with an external timer or a remote control.

Call the after-sales service if you want to convert your appliance to a different type of gas.
You cannot operate the appliance with a timer or remote control.
Always place accessories in the cooking compartment the right way round.

1.2 Restriction on user group

This appliance may be used by children aged 8 or over and by people who have reduced physical, sensory or mental abilities or inadequate experience and/or knowledge, provided that they are supervised or have been instructed on how to use the appliance safely and have understood the resulting dangers.
Do not let children play with the appliance.

Children must not perform cleaning or user maintenance unless they are at least 15 years old and are being supervised.
Keep children under the age of 8 years away from the appliance and power cable.

1.3 Safe use

⚠ WARNING – Risk of explosion!

Escaping gas may cause an explosion. WHAT TO DO IF YOU SMELL GAS OR IF THERE ARE FAULTS IN THE GAS INSTALLATION

- Immediately shut off the gas supply or close the gas cylinder valve.
- Immediately extinguish all naked flames and cigarettes.
- Do not operate any light switches or appliance switches.
- Do not pull any plugs out of any sockets.
- Do not use any telephones or mobile phones within the building.
- Open windows and ventilate the room.
- Call the after sales service or the gas supplier.

Escaping gas may cause an explosion. Small amounts of gas can collect over a longer period of time and ignite.

- Close the safety valve for the gas supply when the appliance is out of use for prolonged periods.

Escaping gas may cause an explosion. If the liquefied gas bottle is not upright, liquefied propane/butane can enter the appliance. Intense darting flames may therefore escape from the burners. Components may become damaged and start to leak over time so that gas escapes uncontrollably.

- Always use liquefied gas bottles in an upright position.

Escaping gas may cause an explosion. If the gas pressure in your distributing pipes is more than 20% higher than the values specified on the appliance's rating plate, a gas leak can occur.

- For your own safety, it is imperative that you operate the appliance with a suitable gas governor.
- If you do not know what the gas pressure in your gas distributing pipes is, please ask your local gas company.
- Connection, maintenance and setting of the gas governor must be carried out by an authorised installation specialist.

⚠ WARNING – Risk of poisoning!

Using the gas cooking appliance leads to a build-up of heat, moisture and combustion products in the room where the appliance is installed.

- Ensure that the kitchen is sufficiently ventilated, in particular when operating the gas cooking appliance.
- If the appliance is used intensively and for prolonged periods, ensure that there is additional ventilation so that the combustion products are safely fed to the outside, e.g. if using existing ventilation equipment, set a higher performance level and, at the same time, ensure that the air is replaced with fresh air in the room where the appliance is installed.
- Consult specialist personnel when installing additional ventilation equipment.

⚠ WARNING – Risk of fire!

The appliance will become hot.

- Do not keep combustible objects or aerosol cans in drawers directly underneath the hob.
- Never store or use combustible materials (e.g. spray cans or cleaning agents) under the appliance or in its immediate vicinity.

Hob covers can cause accidents, for example due to overheating, catching fire or materials shattering.

- Do not use hob covers.

The appliance becomes very hot, fabrics and other objects may ignite.

- Keep fabrics (e.g. garments or curtains) away from the flames.
- Never reach over the flames.
- Do not place combustible objects (e.g. tea towels or newspapers) on, next to or behind the appliance.

Escaping gas may ignite.

- If the burner does not ignite after 15 seconds, turn the control knob to the "Off" position and open the door or window in the room. Do not attempt to re-ignite the burner for at least one minute.
- In the event of the burner flames being accidentally extinguished, turn off the burner control. Do not attempt to re-ignite the burner for at least one minute.

Opening the appliance door creates a draught. Greaseproof paper may come into contact with the heating element and catch fire.

- Never place greaseproof paper loosely over accessories when preheating the appliance and while cooking.
- Always cut greaseproof paper to size and use a plate or baking tin to hold it down.

Combustible objects that are left in the cooking compartment may catch fire.

- Never store combustible objects in the cooking compartment.

The rear of the appliance becomes very hot.

- This may cause damage to the power cables.
- Electricity and gas lines must not come into contact with the rear of the appliance.

It is dangerous to use an extended power cord and non-approved adapters.

- Do not use extension cables or multiple socket strips.
- Only use adapters and power cords approved by the manufacturer.
- If the power cord is too short and a longer one is not available, please contact an electrician to have the domestic installation adapted.

⚠ WARNING – Risk of burns!

Hob protective grilles may cause accidents.

- Never use hob protective grilles.

Accessories and cookware get very hot.

- Always use oven gloves to remove accessories or cookware from the cooking compartment.

Empty cookware becomes extremely hot when set on gas burners that are operating.

- Never heat up empty cookware.

The appliance becomes hot during operation.

- Allow the appliance to cool down before cleaning.

When the cooking compartment is hot, any alcoholic vapours inside may catch fire.

- Only use small quantities of drinks with a high alcohol content in food.
- Open the appliance door carefully.

The appliance and its parts that can be touched become hot during use.

- Caution should be exercised here in order to avoid touching heating elements.
- Young children under 8 years of age must be kept away from the appliance.

Accessible points may be hot when using the grill.

- Keep small children away from the appliance.

⚠ WARNING – Risk of electric shock!

Improper repairs are dangerous.

- Repairs to the appliance should only be carried out by trained specialist staff.
- Only use genuine spare parts when repairing the appliance.
- If the power cord of this appliance is damaged, it must be replaced by the manufacturer, the manufacturer's Customer Service or a similarly qualified person in order to prevent any risk.

If the appliance or the power cord is damaged, this is dangerous.

- Never operate a damaged appliance.
- Never operate an appliance with a cracked or fractured surface.
- Never pull on the power cord to unplug the appliance. Always unplug the appliance at the mains.
- If the appliance or the power cord is damaged, immediately unplug the power cord or switch off the fuse in the fuse box and turn off the gas supply.
- Call customer services. → *Page 27*

An ingress of moisture can cause an electric shock.

- Do not use steam- or high-pressure cleaners to clean the appliance.

The insulation on cables of electrical appliances may melt if it touches hot parts of the appliance.

- Never bring electrical appliance cables into contact with hot parts of the appliance.

If the insulation of the power cord is damaged, this is dangerous.

- Never let the power cord come into contact with hot appliance parts or heat sources.
- Never let the power cord come into contact with sharp points or edges.
- Never kink, crush or modify the power cord.

⚠ WARNING – Risk of injury!

Faults or damage to the appliance and repairs that have not been carried out correctly are dangerous.

- Never switch on the appliance if there is a fault with it.
- If the appliance is faulty, unplug the mains plug or switch off the fuse in the fuse box. Shut off the gas supply and call the after sales service.
- Always have repairs carried out to the appliance and damaged gas lines replaced by trained, specialist personnel.

Cookware that is not the right size, or that is damaged or incorrectly positioned may cause serious injuries.

- See the notes on cookware.

When switching on the burner, sparks are generated in the ignition plugs.

- Never touch the ignition plugs while the burner is being lit.

A scratched upper glass cover may break and fragment.

- Do not use a glass scraper or any harsh or abrasive cleaning products.

The hinges on the appliance door move when the door is opened and closed, which could trap your fingers.

- Keep your hands away from the hinges.

Scratched glass in the appliance door may develop into a crack.

- Do not use any harsh or abrasive cleaners or sharp metal scrapers to clean the glass on the oven door, as they may scratch the surface.

If you leave the appliance door open, people may bump into it, resulting in injury.

- Always keep the appliance door closed during and after operation.

⚠ WARNING – Risk of scalding!

The accessible parts of the appliance become hot during operation.

- Never touch these hot parts.
- Keep children at a safe distance.

Hot steam may escape when you open the appliance door. Steam may not be visible, depending on the temperature.

- Open the appliance door carefully.
- Keep children at a safe distance.

If there is water in the cooking compartment when it is hot, this may create hot steam.

- Never pour water into the cooking compartment when the cooking compartment is hot.

1.4 Glass cover

⚠ WARNING – Risk of injury!

The glass cover may crack due to heat.

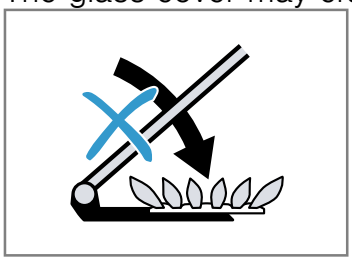

- Before closing the cover, switch off all of the burners.
- Wait until the oven has cooled down before closing the glass cover.
- Before opening the top cover, remove any spills with a cloth and dry the cover.

1.5 Plinth drawer

⚠ WARNING – Risk of fire!

The surfaces of the plinth drawer may become very hot.

- Only store oven accessories in the drawer.
- Do not keep any flammable or combustible objects in the plinth drawer.

1.6 Halogen bulb

⚠ WARNING – Risk of burns!

The bulbs in the cooking compartment get very hot. There is still a risk of burning for some time after they have been switched off.

- Do not touch the glass cover.
- Avoid contact with your skin when cleaning.

⚠ WARNING – Risk of electric shock!

When changing the bulb, the bulb socket contacts are live.

- Before replacing the bulb, ensure that the appliance is switched off in order to prevent a potential electric shock.

2 Preventing material damage

2.1 Oven area

Follow the corresponding instructions when using the oven.

ATTENTION!

Objects on the cooking compartment floor at over 50 °C will cause heat to build up. The baking and roasting times will no longer be correct and the enamel will be damaged.

- Do not place any accessories, greaseproof paper or foil of any kind on the cooking compartment floor.
- Only place cookware on the cooking compartment floor if a temperature above 50 °C has been set.

If aluminium foil comes into contact with the door pane, it could cause permanent discolouration.

- Do not allow aluminium foil in the cooking compartment to come into contact with the door pane.

When the cooking compartment is hot, any water inside it will create steam. The change in temperature may cause damage.

- Never pour water into the cooking compartment when it is still hot.
- Never place cookware containing water on the cooking compartment floor.

The prolonged presence of moisture in the cooking compartment leads to corrosion.

- Allow the cooking compartment to dry after use.
- Do not keep moist food in the cooking compartment for a long time with the door closed.
- Do not store food in the cooking compartment.

Leaving the appliance to cool down with the door open will damage the front of neighbouring kitchen units over time.

- Always allow the cooking compartment to cool down with the door closed after cooking at high temperatures.
- Take care not to trap anything in the appliance door.
- Only leave the cooking compartment to dry with the door open if a lot of moisture was produced during operation.

Fruit juice dripping from the baking tray leaves stains that cannot be removed.

- When baking very juicy fruit flans, do not pack too much on the baking tray.
- If possible, use the deeper universal pan.

Using oven cleaner in a hot cooking compartment damages the enamel.

- Never use oven cleaner in the cooking compartment when it is still warm.
- Remove all food remnants from the cooking compartment and the appliance door before you next heat up the appliance.

If the seal is very dirty, the appliance door will no longer close properly during operation. This may damage the front of adjacent kitchen units.

- Keep the seal clean at all times.
- Never operate the appliance if the seal is damaged or missing.

Sitting or placing objects on the appliance door may damage it.

- Do not place or hang objects on the appliance door.
- Do not place cookware or accessories on the appliance door.

With certain models, accessories may scratch the door pane when closing the appliance door.

- Always push accessories fully into the cooking compartment.

If you carry or move the appliance by the handle on the cover or move, the handle may break off and cause damage to the hinges. The handle of the cover is not designed for the weight of the appliance.

- Do not carry or move the appliance by the handle on the cover.

When grilling, due to high temperatures, the baking tray or universal pan may become deformed and damage the enamel coating when they are removed.

- When grilling, do not insert the baking tray or universal pan higher than level 3.
- Above shelf position 3, only grill directly on the wire insert.

2.2 Hob with gas

Follow the corresponding instructions when using the appliance.

ATTENTION!

A build-up of heat may damage the appliance.

- Never cover the stainless steel hob, for example with aluminium foil or oven protectors.
- Only use the accessories specified.

Heat can cause damage to adjacent appliances or kitchen units. If the appliance is in operation for an extended period, heat and moisture will be generated.

- Open a window or switch on an extractor hood leading to the outside.

A build-up of heat may damage the appliance.

- Do not heat roasters, frying pans or grill stones using more than one burner at a time.

If a control knob is in the wrong position, this could lead to malfunctions.

- Always turn the control knob to the "Off" position when the appliance is not being used.

Aluminium foil and plastic containers will melt and adhere to hot cooking zone.

- Observe the manufacturer's instructions for special containers.
- No not use oven liners.

The burner may not ignite or the burner flame is not even.

- Ensure that the hotplate burners are clean and dry.
- The burner cup and burner cover must be in exactly the right position.

Food may spill.

- Remove spills immediately.
- Use deep pots for dishes with a lot of liquid.
- This prevents overflowing.

Penetrating liquid may cause damage to the appliance.
- The area around the appliance must be clean and dry.
- Always keep the appliance and the area around it clean and dry after cleaning.
- Ensure that there are no cleaning materials, cleaning products or water marks on any of the appliance's surfaces.

The glass lid may crack.
- Ensure that the upper cover is not closed, e.g. by playing children, while you are using the hotplate.

The handles or grips on pots or pans may be damaged.
- Place the pot or pan precisely in the centre of the steel grid of the burner.
- This will optimise transfer of the heat from the burner flame to the pot or ban base.
- The handle or grip does is not damaged, and greater energy savings are guaranteed.

The base of the pot or pan may be damaged.
- Cookware that is used on the hotplate must be securely in place.
- Only use pots and pans with an even base.
- Do not heat up empty pots or pans.

Damage may occur if hard or pointed objects fall on the hob.
- Do not let hard or pointed objects fall onto the hob.

Do not hold and move the appliance at the gas pipe (collector). Damage to the gas pipe may lead to gas leak. The gas pipe is not designed for the weight of the appliance.
- Do not hold and move the appliance at the gas pipe.

If you are cleaning food remnants or residue liquids that are penetrating below the hotplates into the the burner seat using lyes or similar chemicals, this may lead to damage to the gas components.
- If you remove the food remnants or residue liquids from the burner seat, do not use lye or similar effective chemicals.

2.3 Drawer area

Follow the corresponding instructions when using the drawer.

ATTENTION!

Do not place hot objects in the plinth drawer. The plinth drawer may be damaged.
- Do not place hot objects in the plinth drawer.

Do not place oven accessories that exceed the height of the drawer into the plinth drawer. Otherwise, this may damage the appliance.
- Do not place oven accessories that exceed the height of the drawer into the plinth drawer.

3 Environmental protection and saving energy

3.1 Disposing of packaging

The packaging materials are environmentally compatible and can be recycled.
- Sort the individual components by type and dispose of them separately.

3.2 Saving energy

If you follow these instructions, your appliance will use less energy.

Only preheat the appliance if the recipe or the recommended settings tell you to do so.
- Not preheating the appliance can reduce the energy used by up to 20%.

Use dark-coloured, black-coated or enamelled baking tins.
- These types of baking tin absorb the heat particularly well.

Open the appliance door as little as possible during operation.
- This maintains the temperature in the cooking compartment and eliminates the need for the appliance to reheat.

When baking multiple dishes, do so in succession or in parallel.
- The cooking compartment is heated after baking the first dish. This reduces the baking time for the subsequent cakes.

For longer cooking times, you can switch the appliance off 10 minutes before the cooking time ends.
- There is sufficient residual heat to finish cooking the dish.

Remove any accessories that are not being used from the cooking compartment.
- Accessories that are not being used do not need to be heated.

Allow frozen food to defrost before cooking.
- This saves the energy that would otherwise be required to defrost it.

Note:

The appliance requires:
- Max. 0.5 W when the appliance switched off

Saving energy

If you follow these instructions, your appliance will use less energy.

Choose a burner roughly the same size as your pan. Centre the cookware on the hob.

Tip: Cookware manufacturers often give the upper diameter of the saucepan. It is often larger than the base diameter.
- Unsuitable cookware or incompletely covered cooking zones consume a lot of energy.

Cover saucepans with suitable lids.
- Cooking without a lid consumes considerably more energy.

Lift lids as infrequently as possible.
- When you lift the lid, a lot of energy escapes.

Use a glass lid.
- You can see into the pan through a glass lid without having to lift it.

Use pots and pans with flat bases.
- Uneven bases increase energy consumption.

Use cookware that is suitable for the quantity of food.
- Large items of cookware containing little food need more energy to heat up.

Cook with only a little water.
- The more water that is contained in the cookware, the more energy is required to heat it up.

Turn down to a lower power level early on.
- If you use an ongoing power level that is too high, you will waste energy.

4 Installation and connection

You can find out where and how best to install your appliance here. You will also learn how to connect your appliance to the power supply.

4.1 Fitting the adjustable feet

Your appliance is supplied with a set of adjustable feet.
- Remove all parts that are not permanently fixed, especially the pan supports and burners.
- Remove any accessories from the oven.
- Lift one side of the appliance off the floor and tilt it slightly.
- Screw the adjustable feet into the mounting holes on the underside of the appliance.

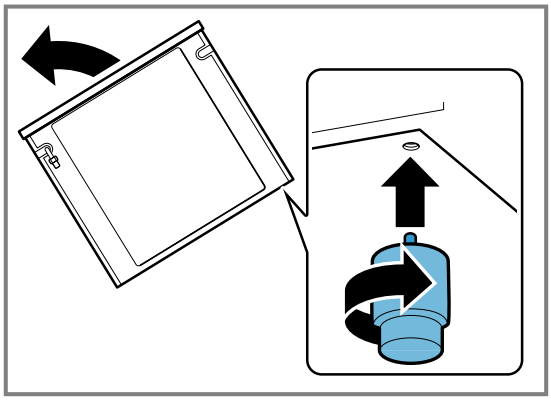

Note: If you then move the appliance, screw the adjustable feet in fully.

- Only finally align the appliance once the electricity and gas have been connected and all of the installation work is complete.

4.2 Gas connection

Only an authorised expert or a licensed customer service technician may install the appliance in accordance with the instructions specified under "Gas connection and conversion to a different gas type".
- The settings for configuring your appliance can be found on the rating plate on the rear of the appliance. The gas type set at the factory is marked with an asterisk (*).
- Find out about the local supply conditions regarding the gas type and gas pressure before installing the appliance, and ensure that the gas setting for the appliance complies with this information.
- Connect and install this appliance in accordance with the applicable to the installation instructions.
- Do not connect this appliance to a waste gas main on the combustion products. Do not connect this appliance to an exhaust gas outlet. Comply with all ventilation regulations.
- Establish the gas supply using a permanent, non-elastic connection, such as a gas pipe or a flexible safety gas hose.
- If a flexible safety gas hose is used, ensure that the hose is not jammed or squeezed. Keep the hose away from hot surfaces.
- On some appliances, you can connect the gas pipe to the gas pipe or flexible safety gas hose on the right-hand or the left-hand side of the appliance. If necessary, you can change the connection side. The connection must have a free-standing and easily accessible locking device.

Target appliance operating pressure
- You can find the target operating pressure for your appliance on the rating plate on the rear of the appliance.
- All the data on your appliance's rating plate relates to these pressure values.
- The manufacturer is not responsible for results, performance or any risk caused by operating the appliance at different values.

⚠ **WARNING – Risk of explosion!**
Escaping gas may cause an explosion. If the gas pressure in your distributing pipes is more than 20% higher than the values specified on the appliance's rating plate, a gas leak can occur.
- ▸ For your own safety, it is imperative that you operate the appliance with a suitable gas governor.
- ▸ If you do not know what the gas pressure in your gas distributing pipes is, please ask your local gas company.
- ▸ Connection, maintenance and setting of the gas governor must be carried out by an authorised installation specialist.

A gas leak could occur. If you move the appliance after the gas supply has been established, a gas leak could occur.
- ▸ Do not move the appliance once the gas supply is connected.
- ▸ If you move the appliance, check that the connections are not leaking.

For the licensed expert or after-sales service

1. The settings for configuring your appliance can be found on the rating plate.
2. Find out which gas type and which gas pressure your local gas supply network uses before installing the appliance, and ensure that the gas setting for the appliance complies with this information. If the appliance settings have to be changed, follow the instructions in the section "Gas connection and conversion to a different gas type".

3. This appliance is not connected to a waste gas main. It must be positioned and connected in accordance with the applicable installation conditions. Do not connect the appliance to a waste gas main. Ensure that suitable ventilation measures are carried out.
4. Establish the gas supply using a permanent, non-elastic connection, such as a gas pipe or a safety hose.
5. If you use a safety hose, ensure that the hose is not trapped or compressed. The hose must not come into contact with hot surfaces.
6. The connection must have an easily accessible locking device.

Flexible hoses

1. Do not pinch or squeeze hoses.
2. Do not subject the hoses to twisting or pulling forces.
3. Keep the hoses away from sharp edges.
4. Do not let the hoses come into contact with parts that may reach a temperature higher than 70 °C above room temperature.
5. Ensure that the full length of the hoses can be accessed for testing.

Checking for leaks

- ▸ After connecting the gas pipe, use soapy water to check the connections for leaks.

Starting up

1. Start up the appliance in accordance with the instruction manual.
2. Ignite all of the burners.
   - Check the stability of the flames at a high and low setting.

Moving or transporting the appliance by the gas pipe (collector) or by the door handle

1. Do not move the appliance by pulling on the gas pipe (collector).
- ✔ The gas pipe may be damaged and a gas leak may occur.
2. Do not move the appliance by holding it by the door handle.
- ✔ This may damage the door hinges and door handle.

4.3 Electrical connection

Only allow a licensed professional to connect the appliance. You must comply with the requirements of your electricity supplier.

- The appliance is designed for operation at 220-240 V. 16 A fuse
- Any damage arising from the appliance being connected incorrectly will invalidate the warranty.

⚠ **CAUTION – !**

The power cable may be damaged. The damage to the power cable may lead to a dangerous situation.

- ▸ The power cable must be replaced by the manufacturer, their after-sales service or a similarly qualified person.

- The appliance must always be disconnected from the power supply when installation work is being carried out.
- The appliance fulfils the requirements of protection class I and must only be connected to an earthed mains socket.
- The mains power cable must be at least type H05 V V-F 3G 1 mm².

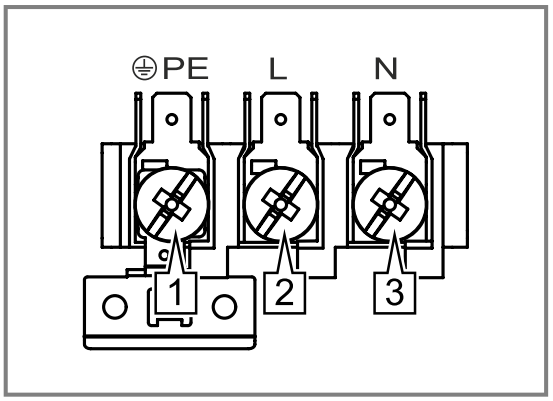

Information	
1	Yellow + green
2	Brown
3	Blue

Important information about the electrical connection

Note the following information and ensure that:

⚠ **WARNING – Risk of electric shock!**

There is a risk of electric shock if you touch live components.

- ▸ Hold the mains plug with dry hands only.
- ▸ Never pull out the mains plug from the socket while the appliance is in operation.
- ▸ Pull out the power cable directly at the plug and never by pulling the power cable as this may become damaged.

- Fit the mains plug and socket together.
- The mains plug can be accessed at all times.
- The cross section of the cable is sufficient.
- The mains cable is not kinked, crushed, modified or severed.
- If required, the mains cable must only be replaced by a qualified electrician. A replacement mains cable is available from the after-sales service.
- Do not use any multiple plugs or multi-connectors and extension cords.
- The earthing system is correctly installed.
- If using a residual current device, only use one that bears the mark ⊠. The presence of this mark is the only way to be sure that it fulfils all the applicable regulations.
- The mains cable does not come into contact with heat sources.

4.4 Appliance categories

Country	Category	P (mbar)
RU, BY, KZ, AM, KG	II 2H3B/P	2000 тта–3000 тта
UA	II 2H3B/P	20 - 28 - 30
MA	I 3+	28 - 30/37
AE, LB, JO	II 2H3B/P	20 - 28 - 30
EG	II 2H3+	20 - 28 - 30/37

4.5 Setting up the appliance

Place the appliance on a smooth surface.
Never set up the appliance behind a decorative door or the door of a kitchen unit. There is a risk of overheating.

- Install the appliance in accordance with the specified dimensions.
- The distance between the top edge of the cooker and the bottom edge of the extractor hood must meet the requirements of the extractor hood manufacturer.
- Ensure that the appliance is not moved again after it is set up.
- In particular, the distance from the high-output burner or wok burner to the fronts of adjacent units or from the wall must be at least 50 mm.

Positioning and levelling

Positioning the appliance

When installing the appliance, ensure that the final location has sufficient space that the appliance can be pulled out for cleaning and maintenance work.
The ground must be hard and stable. The wall directly behind the appliance must be made of non-flammable material, such as tiles.
If you have to pull the appliance while positioning it, ensure that the adjustable feet are screwed in tightly.

Aligning the appliance

Aligning the appliance
Turn the adjustable feet to align the appliance

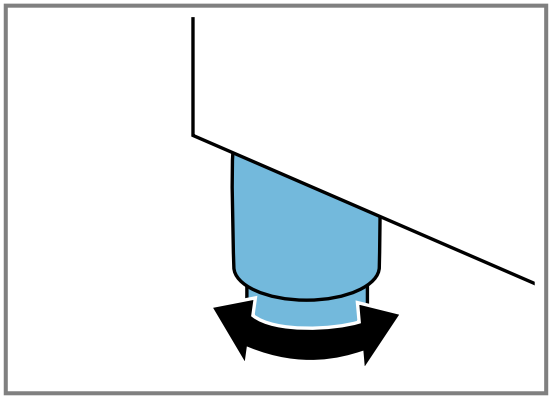

Note:

- Do not align the appliance until all other work has been completed.
- You can use the adjustable feet to increase the height of the appliance by up to 45 mm.
- You must check the alignment of the appliance once it has been installed in the intended location.

Adjacent units

Any adjacent units must not be made of flammable materials.

- The fronts of any adjacent units must be heat-resistant up to at least 90 °C.
- If the appliance is installed very close to other units, the minimum clearances specified in the figure must be complied with.

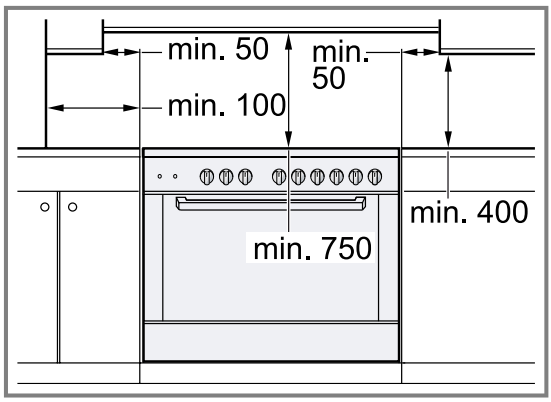

Note: Ensure that the clearance between the appliance and the back wall is at least 10 mm.

5 Familiarising yourself with your appliance

5.1 Your appliance

You can find an overview of the parts of your appliance here.

Note: On certain models, specific details such as colour and shape may differ from those pictured.

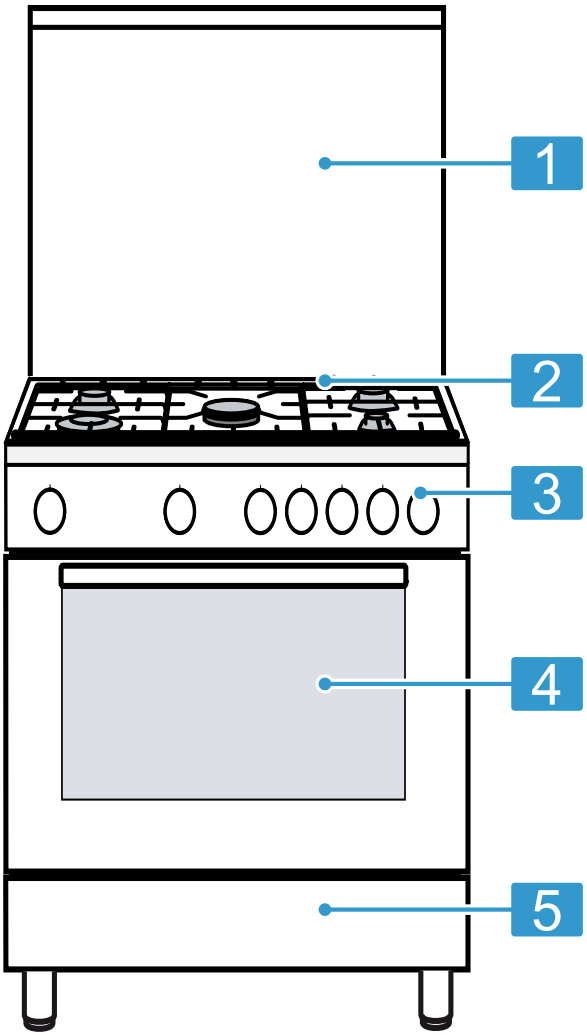

	Explanation
1	Covering plate[1]
2	Hob

[1] Depending on the appliance specifications

	Explanation
3	Control panel
4	Appliance door
5	Plinth drawer[1]

[1] Depending on the appliance specifications

5.2 Hob

You can view an overview of the hob here.

Note: On certain models, specific details such as colour and shape may differ from those pictured. Depending on the appliance model, you will find the pan supports in the hob in the plinth drawer. Insert the pan supports in the relevant position when installing the appliance.

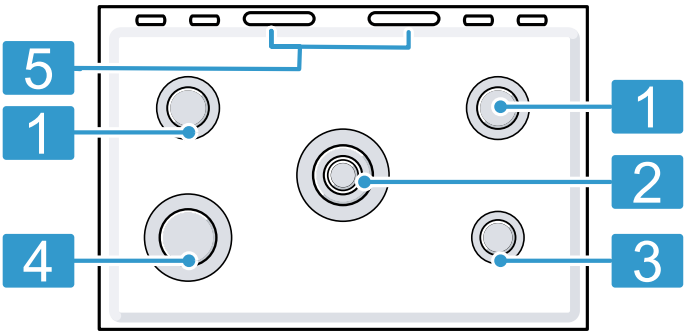

	Power kW	Burner/hob
1	1,75	Standard output burner
2	3,4/4[1]	Wok burner
3	1	Economy burner
4	3	High output burner
5		Steam escaping! **Note:** When the oven is in operation, hot steam escapes here.

[1] Depending on the appliance specifications

5.3 Control panels

You can use the control panel to configure all functions of your appliance and to obtain information about the operating status.

Types of heating and functions

To ensure that you always find the right type of heating to cook your food, we explain the differences and applications below.

Symbol	Type of heating	What it's used for and how it works
	Bottom heating 140-255 °C	Final baking or cooking food in a bain marie. The heat is emitted from below.
	Gas grill Large flame Small flame	Grill flat items such as steak, sausages, or toast. The whole area below the grill element becomes hot.
and	Combination mode	For cakes and pastries, bakes, toasted sandwiches, poultry, fish, joints of meat, sausages and steaks. The oven gas burner and grill gas burner work together.

Operating elements

You can use the controls to configure all functions of your appliance and to obtain information about the operating status.

Control	Explanation
Timer	You can use the timer to set a cooking time. → *"Timer", Page 13*
Control knob for the oven	You can use the control knob for the oven to set the desired temperature. → *"Control knob for the oven", Page 12*
Control knob for the oven gas grill	You can use the control knob for the oven gas grill to set the grill temperature. → *"Control knob for the oven gas grill", Page 12*

Control	Explanation
Hotplate switch	You can use the hotplate switches to control the output provided by each individual hotplate. The symbol above each of the switches shows you which hotplate is set using that switch. → *"Gas hob selector", Page 13*
	You can use the multi-function control knob to switch on various functions for your appliance and switch on the oven light. → *"Multi-function control knob", Page 12*

Control knob for the oven

Turn the oven control knob for the oven temperature anti-clockwise.

Position	Power kW	Function	Explanation
		Zero setting	The oven is switched off.
140 - 255 (max)	4.2/4.4 kW[1]	Temperature setting range	Heat generated by the lower oven gas burner in °C for preparing cakes in tins, pizza on a baking tray, baked goods, etc.

[1] Depending on the appliance specifications

Control knob for the oven gas grill

To set the grill temperature, turn the control knob for the gas grill.

Position	Function Power kW	Explanation
	Zero position	The oven is switched off.
	Grill 3.1 kW	The grill settings for the grill
	Large flame	Highest setting
	Small flame	Lowest setting

Multi-function control knob

Position	Function	Explanation
	Light	Switch on the oven light.

Gas hob selector

The gas hotplate selector is used to set the heat setting for the hotplates.

Position	Function	Explanation
○	Zero setting	The hotplate is switched off.
✸	Ignition position	All the igniters ignite at the same time.
⌀ ⌀	Settings range	Large flame = highest setting Small flame = lowest setting

There is a limit stop at the end of the settings range. Do not turn the gas hotplate selector beyond the end stop.

Timer

You can use the timer to set the cooking time up to 60 minutes.

Note: The timer has no effect on how the oven works. It can only be used as a kitchen timer.

Position	Function	Explanation
○	Zero setting	Off.
○ - 60	Time period	Time scale in minutes. Setting in 1-minute intervals up to 10 minutes possible.

Note: The last set value is a limit stop. Do not turn the timer beyond this point.

5.4 Cooking compartment

The functions in the cooking compartment make your appliance easier to use.

Rails

The shelf supports in the cooking compartment enable you to place accessories at different heights.
The cooking compartment has five shelf positions. The shelf positions are numbered from bottom to top.
You can remove the rails, e.g. for cleaning.
→ *"Rails", Page 22*

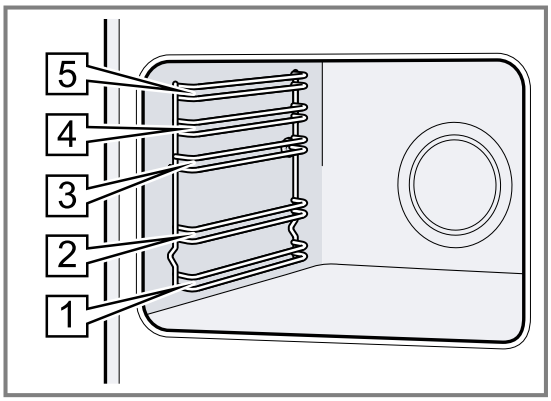

Lighting

The oven lamp lights up the cooking compartment. With most functions, the lighting lights up during operation. The lighting switches itself off when the multi-function control knob is switched off.

Steam outlet

The hot air from the cooking compartment escapes at the rear of the hob.

ATTENTION!

Covering the ventilation slots will cause the appliance to overheat.

- Do not cover the ventilation slots.

Cooling fan

The cooling fan switches on and off depending on the appliance's temperature. The hot air escapes above the door.

ATTENTION!

Do not cover the ventilation slot above the appliance door. The appliance overheats.

- Ensure that the ventilation slots are unobstructed.

To ensure that the appliance cools down more quickly after operation, the cooling fan continues to run for a certain period afterwards.

Appliance door

If you open the appliance door during operation, the operation continues.

Condensation

Condensation can occur in the cooking compartment and on the appliance door when cooking. Condensation is normal and does not adversely affect appliance operation. Wipe away the condensation after cooking.

5.5 Storage compartment

This compartment can be used to store hob or oven accessories.

Open the storage compartment by folding down the panel.

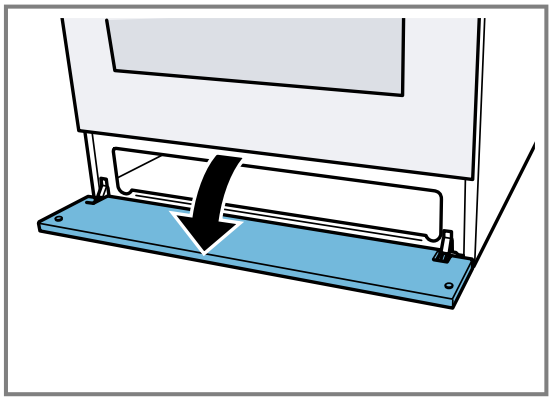

6 Accessories

Use original accessories. These have been made especially for your appliance.

Note: Heat may deform the accessory. This deformation has no effect on the function. When the accessory cools down, it will regain its original shape.

The accessories supplied may differ depending on the appliance model.

Accessories		Use
Baking tray	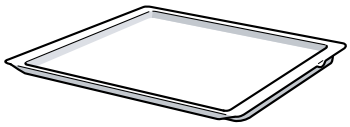	■ Tray bakes ■ Sponge cake, simple
Baking and roasting shelf		For ovenware, cake tins, roasts, grilled items and frozen meals.
Espresso pot trivet	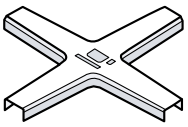	Espresso pot trivet for placing on the economy burner.

6.1 Using the accessory

Always slide the accessory into the cooking compartment correctly. This is the only way that you can remove the accessory halfway without it tipping.

1. Insert the accessory between the two guide rods for a shelf position.

Wire rack	Insert the wire rack with the open side facing the appliance door and the curved lip ⌣ facing downwards.
Tray E.g. universal pan or baking tray	Slide the tray in with the sloping edge facing the appliance cover.

2. | | |
|---|---|
| Espresso pot trivet | Only use the attachment for espresso pots on the economy burner's wire rack. |

3. Slide the accessory all the way in, making sure that the accessory does not touch the appliance door.

Note: Take any accessories that you will not be using out of the cooking compartment while the appliance is in operation.

6.2 Other accessories

You can purchase other accessories from our after-sales service, specialist retailers or online.
You will find a comprehensive range of products for your appliance in our brochures and online:
www.bosch-home.com
Accessories vary from one appliance to another. When purchasing accessories, always quote the exact product number (E no.) of your appliance.
You can find out which accessories are available for your appliance in our online shop or from our after-sales service.

7 Before using for the first time

Configure the settings for initial start-up. Clean the appliance and accessories.

7.1 Cleaning the appliance before using it for the first time

Clean the cooking compartment and accessories before using the appliance to prepare food for the first time.

1. Remove the accessory and the leftover packaging, such as polystyrene pellets, from the cooking compartment.
2. Before heating, wipe the smooth surfaces in the cooking compartment with a soft, damp cloth.
3. Set the type of heating and the temperature.
   → *"Basic operation", Page 18*

Type of heating	Lower oven gas burner/gas grill
Temperature	Maximum
Cooking time	30 minutes

4. Ventilate the room while the appliance is heating.
5. Switch off the appliance after the specified cooking time.
6. Wait until the cooking compartment has cooled down.
7. Clean the smooth surfaces with soapy water and a dish cloth.
8. Clean the accessories with soapy water and a dish cloth or soft brush.

8 Cookware

This information has been provided to help you save energy and avoid damaging your cookware.

8.1 Using cookware

The selection and positioning of the cookware affects the safety and energy efficiency of your appliance.

⚠ **WARNING – Risk of fire!**

Flammable objects may ignite.

- Maintain a distance of at least 50 mm between the cookware and flammable objects.

⚠ **WARNING – Risk of injury!**

An incorrectly positioned wok may cause injuries. The wok is not stable and may overturn.

- Use the wok only on the wok burner and the wok ring. Never set the wok ring and wok on the standard output burner and high-output burner.

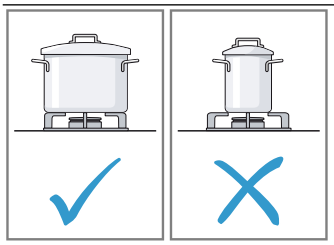

- Ensure that the size of the cookware is suitable for the burner size.
- Never use small items of cookware on large burners.
- Ensure that the flame does not touch the sides of the cookware.

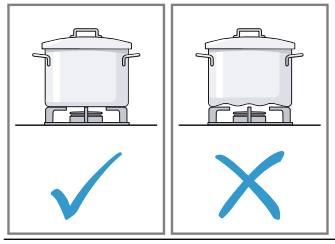

- Do not use deformed cookware.
- Deformed cookware is not stable on the hob and may tip over.
- Use cookware with a thick, flat base.

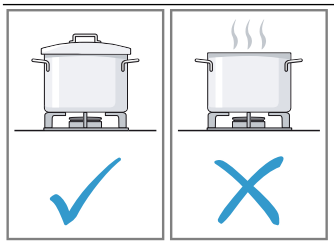

- Do not cook without a lid.
- Ensure that the lid does not move.
- When cooking without a lid, a large amount of the energy escapes.

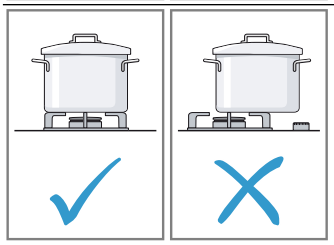

- Position the cookware in the middle of the burner, otherwise it may tip over.
- Do not position large cookware on the burners close to the controls.
- The controls may be damaged due to overheating.

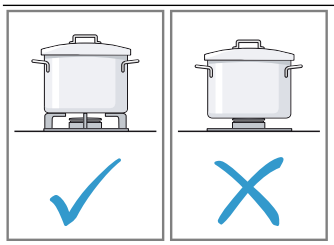

- Place the cookware on the pan supports.
- Never place the cookware directly on the burner.
- Before using the appliance, ensure that the pan supports and the gas burner covers are positioned correctly.

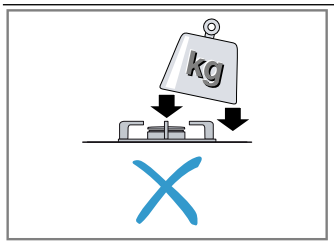

- Handle the cookware that is on the cooktop carefully.
- Do not bang on the hob.
- Do not place heavy weights on the cooktop.

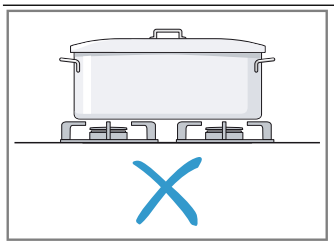

- Never use multiple burners to heat up cookware. The build-up of heat that results from this will damage the appliance.
- Do not heat grill stones or paella pans.
- Only use cookware up to the maximum permissible diameter.

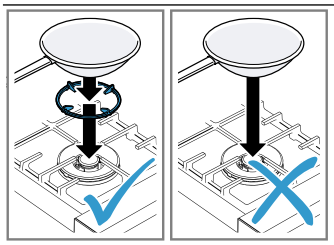

- When cooking with a wok, use the wok ring.
- Place the wok ring over the wok burner onto the pan support.
- Ensure that the wok is stable on the wok ring when you are cooking.

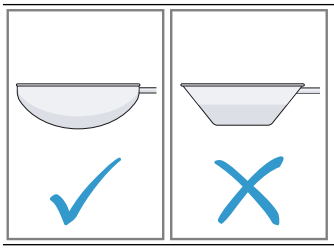

- Use a high-quality wok with a domed base.
- A wok with a flat base is not stable on the wok ring and may overturn.

8.2 Tips for using a wok

Note the following information to ensure the safe use of a wok.

⚠ **WARNING – Risk of injury!**

An incorrectly positioned wok may cause injuries. The wok is not stable and may overturn.

- Use the wok only on the wok burner and the wok ring. Never set the wok ring and wok on the standard output burner and high-output burner.

Use a wok with a domed base. You can order a high-quality wok as an optional accessory.
When cooking with a wok, you need a wok ring. Place the wok ring over the wok burner onto the pan support. Ensure that the wok is stable on the wok ring when you are cooking.

8.3 Suitable cookware

1. Only use cookware with a suitable diameter.
2. Ensure that the cookware does not protrude over the edge of the hob.

Suitable cookware

Only use cookware with a suitable diameter. The cookware must not protrude over the edge of the hob.

Burner/hotplate	Maximum diameter of the base of the cookware	Minimum diameter of the base of the cookware
Wok burner	280 mm	240 mm
High output burner	280 mm	240 mm
Standard output burner	240 mm	180 mm
Economy burner	180 mm	120 mm

9 Operating the hotplate

You can find out everything you need to know about operating your hotplate here.

9.1 Fitting burner parts

You can find out how to correctly position the burner parts here.

Requirement: Ensure that the burner parts are clean and dry.

1. Ensure that the individual parts of the burners are fitted in their exact position and are straight; otherwise, this may result in ignition problems or problems during operation.
2. Position the burner lid precisely on the burner head.

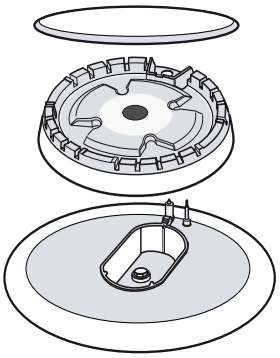

9.2 Important information about the gas hob

Follow these instructions when using your gas hob.

- A slight whistling when operating the burner is normal.
- Odour formation during the first uses is normal. This does not indicate a risk or malfunction. It will stop after a while.
- An orange flame is normal. This is caused by dust in the air, overflowing liquids, etc.
- If the burner's flame accidentally goes out, switch off the burner's selector and wait at least 1 minute before igniting the burner again.
- A few seconds after switching off the hob, you may hear noises, such as a slight clicking, from the burner. This is not unusual, but shows that the pilot is deactivated.
- Keep the ignition plugs clean. If the ignition plugs are dirty, the igniter is damaged. Clean the ignition plugs regularly with a small, metal-free brush. Ensure that the ignition plugs are not exposed to any heavy knocks.

9.3 Operating the hotplate

You can ignite the gas burner as follows.

⚠ **WARNING – Risk of fire!**

Escaping gas may ignite.

- ▸ If the burner does not ignite after 15 seconds, turn the control knob to the "Off" position and open the door or window in the room. Do not attempt to re-ignite the burner for at least one minute.
- ▸ In the event of the burner flames being accidentally extinguished, turn off the burner control. Do not attempt to re-ignite the burner for at least one minute.

ATTENTION!

The burner may not ignite or the burner flame is not even.

- ▸ Ensure that the hotplate burners are clean and dry.
- ▸ The burner cup and burner cover must be in exactly the right position.

The burner may go out accidentally.

- ▸ If the burner's flame accidentally goes out, switch off the burner's selector and wait at least one minute before igniting the burner again.

1. Open the top cover, if available.
   The top cover must remain open while the appliance is running.
2. Place suitable cookware on the pan support.
3. Press and hold the selector for the required burner and set it to the ignition position ✲.
   - ✔ The ignition process starts.
4. Press and hold the hotplate selector for approx. 1–3 seconds.
   - ✔ The gas begins to flow out and the gas burner ignites.
   - ✔ The safety pilot is therefore activated. If the gas flame goes out, the gas supply is automatically shut off by the safety pilot.
5. Set the desired flame size.
   The flame is not stable between settings ☼ Off and ⚘.
   You must therefore always choose a position between the ⚘ large flame and ⚘ small flame.
6. Check whether the flame is burning.
   If the flame is not burning, repeat the steps.
7. To end the cooking process:
   – Turn the hotplate selector clockwise to ☼.

9.4 Recommended cooking settings

You can find an overview of different foods with appropriate heat settings here.

Notes

- The cooking time will vary depending on the type, weight, thickness and quality of the food.
- Select the right cookware size for each hotplate. The diameter of the cookware base should be the same size as the hotplate.
- Use as little water as possible when cooking, so that the food retains its vitamins and minerals.
  – Use as little water as possible when cooking, so that the food retains its vitamins and minerals.
  – Select short cooking times so that the vegetables remain firm and full of nutrients.

Example	Food	Hotplate	Power level
Melting	Chocolate, butter, margarine	Economy burner	Small flame
Warming	Stock, tinned vegetables	Standard output burner	Small flame
Heating and keeping warm	Soups	Economy burner	Small flame
Steaming*	Fish	Standard output burner	Between large and small flame
Braising*	Potatoes and miscellaneous vegetables, meat	Standard output burner	Between large and small flame
Boiling*	Rice, vegetables, meat dishes (with sauces)	Standard output burner	Large flame
Frying	Pancakes, potatoes, schnitzel, fish fingers	Large burner** Wok burner**	Between large and small flame Between large and small flame

Note:
Information
- * If you are using a pan with a lid, turn the flame down as soon as the food starts to boil.
- ** Optional. Available for some appliances. Depending on the appliance type. (For frying on the wok burner, we recommend that you use a wok.)

10 Basic operation

10.1 Setting the lower oven gas burner

When the lower gas burner is lit, you can start to bake on a baking tray with the oven door closed.

⚠ **WARNING – Risk of fire!**
Escaping gas may ignite.
- ▸ If the burner does not ignite after 15 seconds, turn the control knob to the "Off" position and open the door or window in the room. Do not attempt to re-ignite the burner for at least one minute.
- ▸ In the event of the burner flames being accidentally extinguished, turn off the burner control. Do not attempt to re-ignite the burner for at least one minute.

ATTENTION!
The burner may go out accidentally.
- ▸ If the burner's flame accidentally goes out, switch off the burner's selector and wait at least one minute before igniting the burner again.

1. Open the top cover, if available.
   The top cover must remain open while the appliance is running.
2. Turn on the main gas supply to the appliance. Insert the plug in the socket. Open the oven door.
3. Press the oven selector and turn it to ✲.
   - ✔ Use the igniter to ignite the gas that escapes from the lower gas burner.
4. Continue to press the selector for the oven and turn it to the required temperature.
5. To activate the safety pilot, press and hold the function selector for 10 seconds.
   - ✔ This activates the safety pilot. If the gas flame goes out, the gas supply is automatically shut off by the safety pilot.
6. Check through the opening in the oven's bottom panel that the flame is burning.
   If the flame is not burning, repeat the steps.
7. Close the oven door carefully.
8. Once the food is cooked, turn ○ to the off position

10.2 Setting the oven gas grill

If the gas burner for the gas grill is lit, you can grill in the oven.

⚠ **WARNING – Risk of fire!**
Escaping gas may ignite.
- ▸ If the burner does not ignite after 15 seconds, turn the control knob to the "Off" position and open the door or window in the room. Do not attempt to re-ignite the burner for at least one minute.
- ▸ In the event of the burner flames being accidentally extinguished, turn off the burner control. Do not attempt to re-ignite the burner for at least one minute.

ATTENTION!
The burner may go out accidentally.
- ▸ If the burner's flame accidentally goes out, switch off the burner's selector and wait at least one minute before igniting the burner again.

1. Open the top cover, if available.
   The top cover must remain open while the appliance is running.
2. Turn on the main gas supply to the appliance. Insert the plug in the socket. Open the oven door.
3. Press the oven selector and turn it to ⌀.
   To activate the safety pilot, press and hold the selector for 10 seconds.
   - ✔ This activates the safety pilot. If the gas flame goes out, the gas supply is automatically shut off by the safety pilot.
4. Check whether the flame is burning.
   If the flame is not burning, repeat the steps.
5. Once the food is cooked, turn the function selector for the oven gas grill to the off position.

10.3 Setting the combination mode

You can switch on the lower gas burner and the grill gas burner in your oven at the same time.

⚠ **WARNING – Risk of fire!**
Escaping gas may ignite.
- ▸ If the burner does not ignite after 15 seconds, turn the control knob to the "Off" position and open the door or window in the room. Do not attempt to re-ignite the burner for at least one minute.
- ▸ In the event of the burner flames being accidentally extinguished, turn off the burner control. Do not attempt to re-ignite the burner for at least one minute.

ATTENTION!
The burner may go out accidentally.
- ▸ If the burner's flame accidentally goes out, switch off the burner's selector and wait at least one minute before igniting the burner again.

The grill gas burner may go out due to the air circulation.
- ▸ If the grill gas burner and oven gas burner are operating at the same time in combination mode, carry out the cooking with water in a controlled way.

1. Open the top cover, if available.
   The top cover must remain open while the appliance is running.
2. Turn on the main gas supply to the appliance. Insert the plug in the socket. Open the oven door.
3. Press the oven selector and turn it to ✲.
   - ✔ Use the igniter to ignite the gas that escapes from the lower gas burner.
4. Continue to press the selector for the oven and turn it to the required temperature.

5. To activate the safety pilot, press and hold the function selector for 10 seconds.
✔ This activates the safety pilot. If the gas flame goes out, the gas supply is automatically shut off by the safety pilot.
6. Check through the opening in the oven's bottom panel that the flame is burning.
If the flame is not burning, repeat the steps.
7. Press the oven selector and turn it to ⌀.
To activate the safety pilot, press and hold the selector for 10 seconds.
✔ This activates the safety pilot. If the gas flame goes out, the gas supply is automatically shut off by the safety pilot.
8. Close the oven door carefully.
9. Once the food is cooked, turn the function selector for the oven and the gas grill to ○

Note: The temperature range marked on the selector for the oven applies only when using conventional heating. In combination mode, the temperature in the oven is higher than the temperature that has been set.

11 Time-setting options

Your appliance is equipped with a time-setting option that can be used to set the timer.

11.1 Timer

You can use the timer as a kitchen timer.
The timer runs alongside other settings. You can set the timer at any time, even if the appliance is switched off.

Note: The timer has no effect on how the oven works. It can only be used as a kitchen timer.

Setting the short-term timer

You can set the timer up to 60 minutes when the appliance is switched on or off.

1. Turn the timer clockwise as far as it goes without turning it beyond this point.
2. Then turn it back to the required time.
3. Once the timer duration has elapsed:
   – A signal sounds. The timer automatically switches to .

12 Cleaning and servicing

To keep your appliance working efficiently for a long time, it is important to clean and maintain it carefully.

12.1 Cleaning agent

To avoid damaging the different surfaces of the appliance, do not use unsuitable cleaning agents.

⚠ **WARNING – Risk of electric shock!**
An ingress of moisture can cause an electric shock.
- Do not use steam- or high-pressure cleaners to clean the appliance.

ATTENTION!
Unsuitable cleaning agents damage the surfaces of the appliance.
- Do not use aggressive or abrasive cleaning agents.
- Do not use cleaning products with a high alcohol content.
- Do not use hard scouring pads or cleaning sponges.
- Do not use any special cleaners if the appliance is still warm.

Using oven cleaner in a hot cooking compartment damages the enamel.
- Do not use oven cleaner in the cooking compartment when it is still warm.
- Remove all food remnants from the cooking compartment and the appliance door before you next heat up the appliance.

New sponge cloths contain residues from production.
- Wash new sponge cloths thoroughly before use.

Suitable cleaning agents

Only use cleaning agents that are suitable for the different surfaces on your appliance.

Follow the instructions on cleaning the appliance.
→ *"Cleaning the appliance", Page 21*

Appliance

Surface	Suitable cleaning agents	Information
Stainless steel	■ Hot soapy water ■ Special stainless steel cleaning products suitable for hot surfaces	To prevent corrosion, remove any limescale, grease, starch or albumin (e.g. egg white) stains on stainless steel surfaces immediately. Apply a thin layer of the stainless steel cleaning product.

Surface	Suitable cleaning agents	Information
Enamel, plastic, painted, and screen-printed surfaces E.g. control panel	■ Hot soapy water	Do not use a glass cleaning product or a glass scraper.
Knobs	■ Hot soapy water	Clean with a dish cloth and dry with a soft cloth. Do not remove or scrub.
Gas hotplate burners and pan supports	■ Hot soapy water	Clean the burner parts and pan support with a dish cloth. Only use a little water. Water must not be allowed to enter the inside of the appliance through the burner compartments. Do not clean in the dishwasher.
Plinth drawer	■ Hot soapy water	Clean with a dishcloth.

Appliance cover

Area	Suitable cleaning agents	Information
Door panels	■ Hot soapy water	Do not use a glass scraper or steel wool. **Tip:** Remove the door panels in order to clean them thoroughly. → *"Appliance door", Page 23*
Door cover	■ Made of stainless steel: Stainless steel cleaner: ■ Made of plastic: Hot soapy water	Do not use a glass cleaning product or a glass scraper. **Tip:** To thoroughly clean the cover plate, remove the cover. → *"Appliance door", Page 23*
Door handle	■ Hot soapy water	In order to avoid stubborn dirt, remove descaling agents from the door handle immediately.
Door seal	■ Hot soapy water	Do not remove or scrub.
Upper glass cover	■ Glass cleaner	Clean with a soft cloth. **Tip:** Remove the upper glass cover for thorough cleaning. → *"Top cover", Page 25*

Hob

Area	Suitable cleaning agents	Information
Enamelled surfaces	■ Hot soapy water ■ Vinegar solution ■ Oven cleaner	Soak any heavily soiled areas and use a brush or steel wool. Leave the appliance cover open so that the hob can dry after it has been cleaned. **Notes** ■ Enamel burns at very high temperatures, causing minor discolouration. The functionality of the appliance is not affected by this. ■ The edges of thin baking trays cannot be completely enamelled and may be rough. This does not impair the corrosion protection. ■ Food residues leave a white coating on the enamelled surfaces. The coating does not pose a health risk. The functionality of the appliance is not affected by this. You can remove these residues with lemon juice.
Glass cover on the oven light	■ Hot soapy water	Use oven cleaner to remove very heavy soiling.
Rails	■ Hot soapy water	Soak any heavily soiled areas and use a brush or steel wool. **Tip:** Remove the shelf supports for cleaning. → *"Rails", Page 22*
Accessories	■ Hot soapy water ■ Oven cleaner	Soak any heavily soiled areas and use a brush or steel wool. Enamelled accessories are dishwasher-safe.

12.2 Cleaning the appliance

In order to avoid damaging the appliance, clean your appliance only as specified, and using suitable cleaning products.

⚠ **WARNING – Risk of burns!**
The appliance and its parts that can be touched become hot during use.
- ▸ Caution should be exercised here in order to avoid touching heating elements.
- ▸ Young children under 8 years of age must be kept away from the appliance.

⚠ **WARNING – Risk of fire!**
Loose food remnants, fat and meat juices may catch fire.
- ▸ Before using the appliance, remove the worst of the food residues and remnants from the cooking compartment, heating elements and accessories.

Requirement: Read the information on cleaning agents.
→ *"Cleaning agent", Page 19*

1. Clean the appliance using hot soapy water and a dish cloth.
   – For some surfaces, you can use alternative cleaning agents.
   → *"Suitable cleaning agents", Page 19*
2. Dry with a soft cloth.

12.3 Cleaning controls

⚠ **WARNING – Risk of electric shock!**
An ingress of moisture can cause an electric shock.
- ▸ Do not detach the control knobs to clean them.
- ▸ Do not use wet sponge cloths.

1. Observe the information regarding the cleaning agents.
2. Clean using a damp sponge cloth and hot soapy water.
3. Dry with a soft cloth.

12.4 Discoloration of the burners

After long use, the brass burner parts become darker due to natural oxidation. This discolouration does not affect their usability.

12.5 Cleaning the pan support manually

Clean the wok ring in the same way as the pan support.

⚠ **WARNING – Risk of burns!**
The appliance becomes hot during operation.
- ▸ Allow the appliance to cool down before cleaning.

1. Carefully remove the pan support.
2. Soak the pan support in the sink.
3. Clean the pan support using a scrubbing brush and washing-up liquid.
4. Rinse the pan support rinse with clean water.
5. Dry the pan support with a kitchen towel.

12.6 Using cleaning gel for burnt-on dirt

For hard-to-remove, burnt-on dirt, you can order a cleaning gel from our online shop, from your specialist retailer or via our after-sales service.

1. Follow the instructions on the cleaning product.
2. Remove the pan supports and the burner parts.
3. **ATTENTION!**
   On the burner parts, the controls and the aluminium surfaces, the cleaning gel leads to damage.
   - ▸ Only use the cleaning gel on the pan supports and stainless steel surfaces.

   Apply the cleaning gel to the burnt-on dirt.
4. If necessary, let the dirt soak overnight.

12.7 Cleaning the stainless steel surfaces

1. Observe the information regarding the cleaning agents.
2. Clean using a sponge cloth and hot soapy water in the direction of the finish.
3. Dry with a soft cloth.
4. Apply a thin layer of the stainless steel cleaning product with a soft cloth.

Tip: You can obtain stainless steel cleaning products from after-sales service or the online shop.

12.8 Cleaning the burners

After long use, the brass burner parts become darker due to natural oxidation. This discolouration does not affect their usability.

⚠ **WARNING – Risk of burns!**
The appliance becomes hot during operation.
- ▸ Allow the appliance to cool down before cleaning.

1. Carefully remove the pan support.
2. Carefully remove the burner parts.
3. Clean the burner parts using a scrubbing brush and washing-up liquid.
4. Rinse the burner parts with clean water.
5. Ensure that the burner parts are completely dry before fitting them; otherwise, there may be ignition problems or problems during operation.

12.9 Cleaning the cooking zone switch

Clean the cooking zone switch after use if it is dirty or stained.

Note:
- ■ Read the information on unsuitable cleaning agents.
- ■ Do not use a glass scraper.
- ■ Do not use a glass ceramic cleaner.
- ■ Do not remove the cooking zone switch.

1. Clean the cooking zone switch using hot soapy water and a soft cloth.
   – Wring out the cloth well. The cloth must not be too wet.
   – Wash new sponge cloths thoroughly before use.
2. Dry with a soft cloth.

13 Rails

To clean the rails and cooking compartment thoroughly, you can remove the shelf supports.

13.1 Unhooking the rails

⚠ **WARNING – Risk of burns!**
The rails can be very hot.
- Never touch the rails when they are hot.
- Allow the appliance to cool down.
- Keep children at a safe distance.

1. Hold the bottom of the shelf support and pull it slightly towards the front. Pull the extension pins in the lower section of the rails out of the mounting openings.

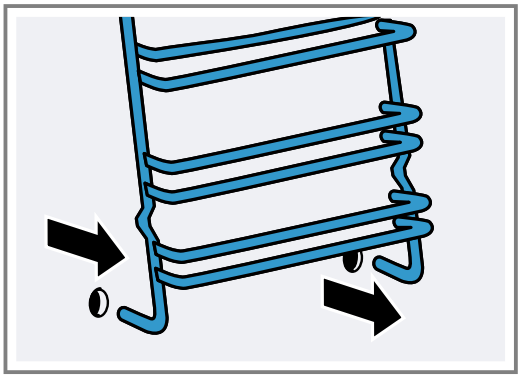

2. Pull the entire shelf support downwards first and then pull it forwards and remove it.

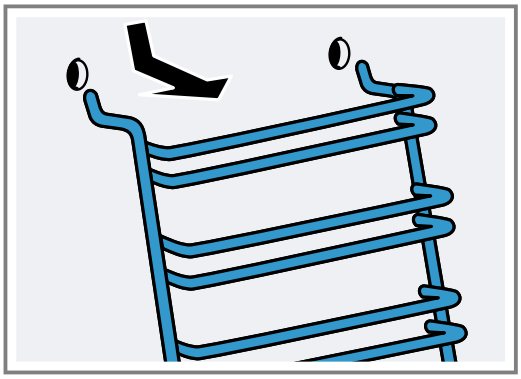

13.2 Attaching the rails

1. Place the two hooks at the top of the rail into the upper holes.

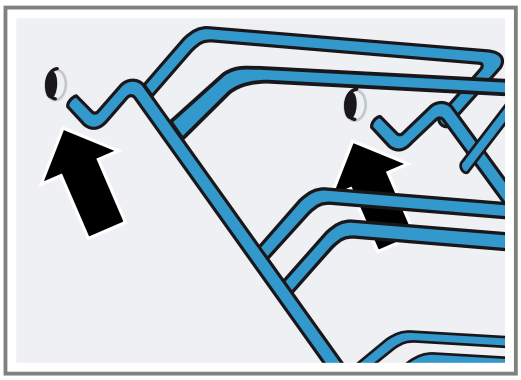

2. **ATTENTION!**
Incorrect assembly
   - Never move the rail before the two hooks are secured fully in the upper holes. Otherwise the enamelled coating may be damaged and break.

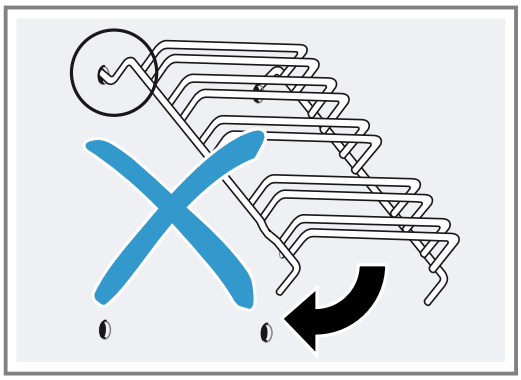

3. Both hooks must be inserted fully into the upper holes. Move the rail down slowly and carefully, and hook it into the lower holes.

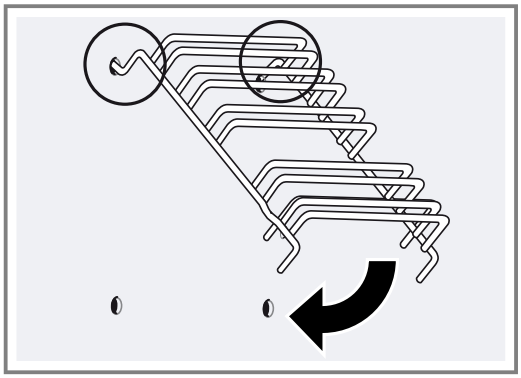

4. Hook both rails into the side walls of the oven.

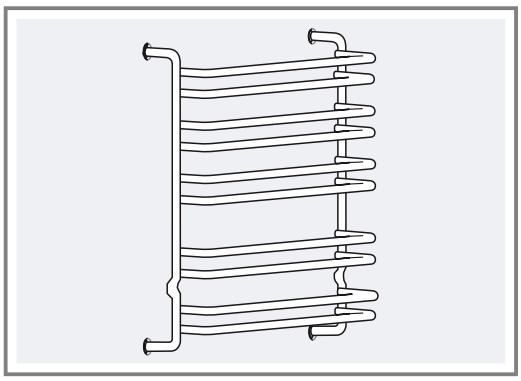

If the rails are fitted correctly, the distance between the two upper shelf positions is greater.

14 Appliance door

It is normally sufficient if you clean the outside of the appliance door. If the appliance door is very dirty on the inside and outside, you can remove the appliance door and clean it.

14.1 Door hinges

⚠ **WARNING – Risk of injury!**
When the hinges are not secured, they can snap shut with great force.

- ▸ If you open the appliance door, ensure that the locking levers are fully open or fully closed.

1. The oven door hinges each have a locking lever. When the locking levers are closed, the oven door is secured in place.

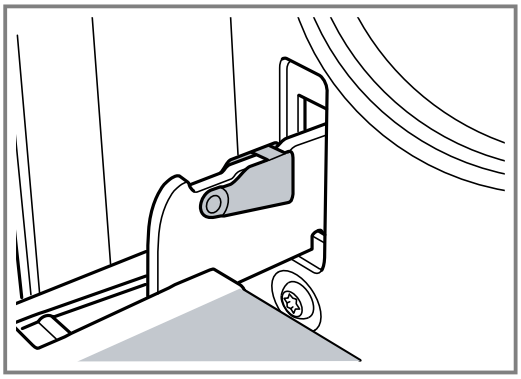

It cannot be detached.

2. When the locking levers are open in order to detach the oven door, the hinges are secured.

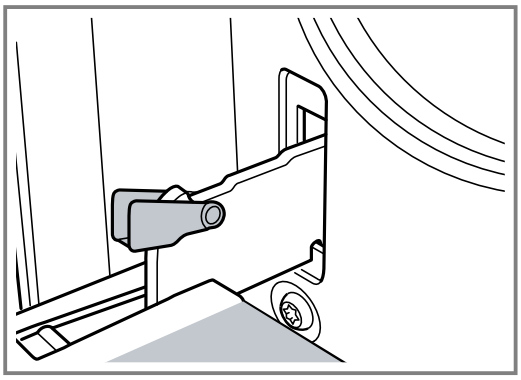

The hinges cannot snap shut.

14.2 Removing the appliance door

1. Open the oven door fully.
2. Open the locking levers on the left- and right-hand hinges.

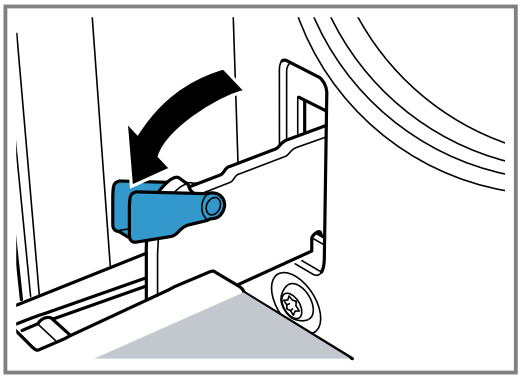

3. Close the oven door as far as the limit stop. Grip the left and right hand sides of the door with both hands. Close the door slightly more and remove it.

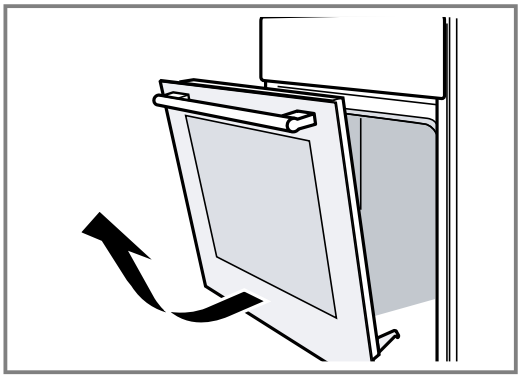

14.3 Removing the door panes

The glass panes of the oven door can be removed to make cleaning easier.

⚠ **WARNING – Risk of injury!**
Scratched glass in the appliance door may develop into a crack.

- ▸ Do not use any harsh or abrasive cleaners or sharp metal scrapers to clean the glass on the oven door, as they may scratch the surface.

The components in the appliance door may have sharp edges.

- ▸ Wear gloves.

1. Detach the oven door.
2. Position it on a cloth with its handle pointing downwards.

3. Turn the two screws at bottom followed by the two screws at the top in an anti-clockwise direction.

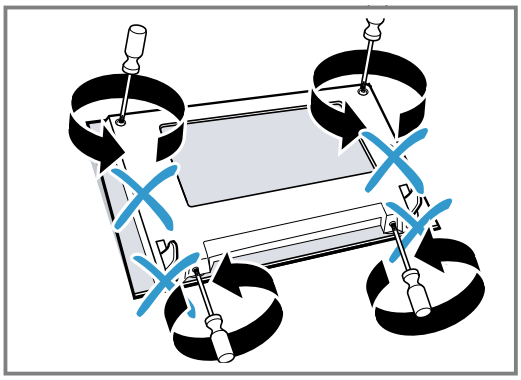

4. Remove the complete door base.

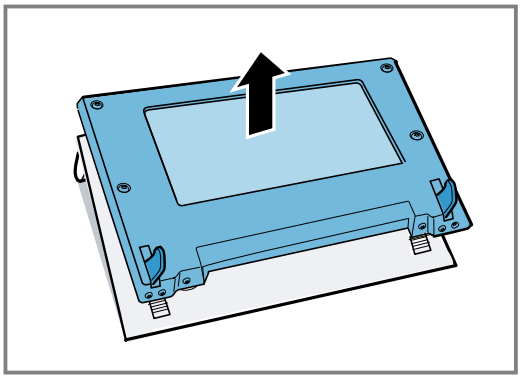

14.4 Fitting the door panes

1. Reinsert the complete door base.

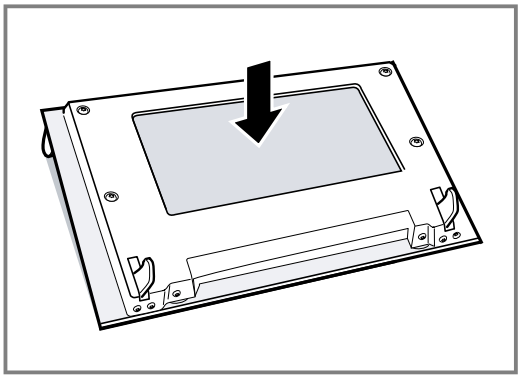

2. First tighten the two screws at the bottom again and then the two screws at the top.

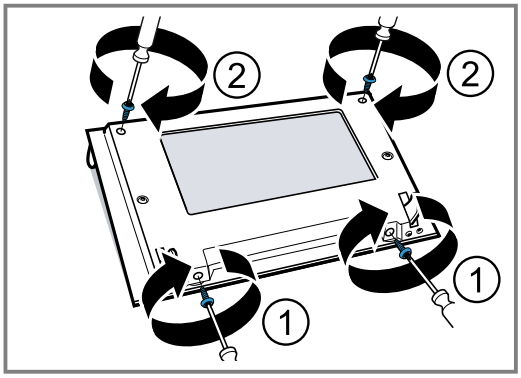

3. Attach the oven door.

Note: Only use the oven once the glass panes have been correctly fitted.

14.5 Attaching the appliance door

Reattach the oven door in the reverse sequence to removal.

⚠ **WARNING – Risk of injury!**

The oven door might accidentally fall or a hinge may suddenly snap shut.

- In this case, do not hold onto the hinge. Call customer service.

1. When attaching the oven door, ensure that both hinges are inserted in the opening direction.

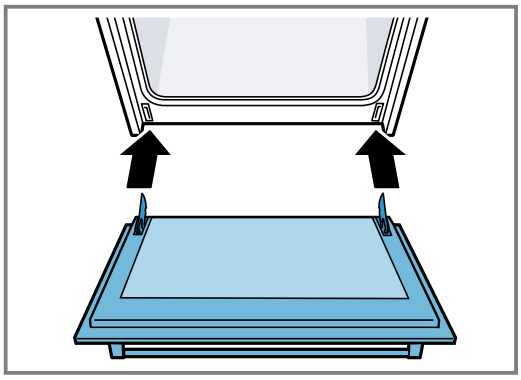

2. The notch on the hinge must engage on both sides.

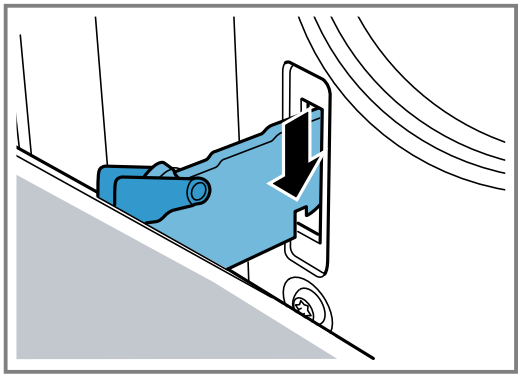

3. Close both locking levers again.

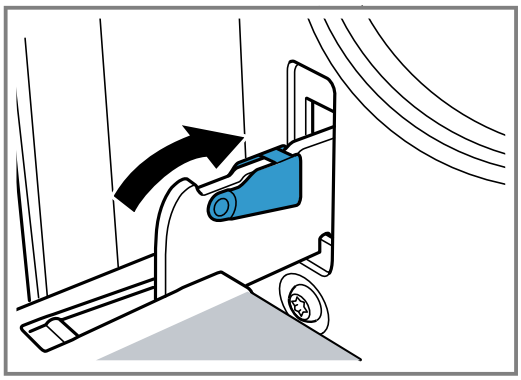

4. Close the appliance door.

15 Top cover

For cleaning, remove the top cover.

15.1 Removing the upper cover

⚠ **WARNING – Risk of injury!**
A scratched upper glass cover may break and fragment.
- Do not use a glass scraper or any harsh or abrasive cleaning products.

Requirement: Before opening the top cover, remove any spills with a cloth and dry the cover.

1. Take hold of the sides of the cover with both hands and pull the cover upwards.

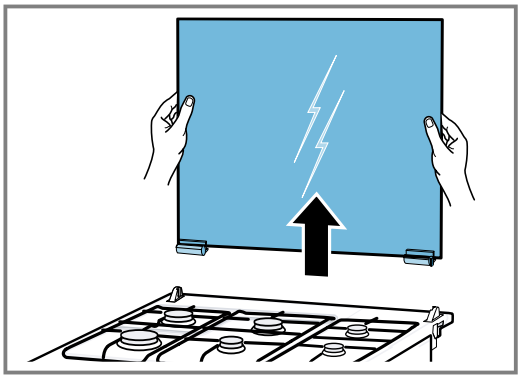

2. Use a glass cleaner for cleaning.

15.2 Installing the top cover

- After cleaning, install the top cover following the same procedure in reverse order.

Note: Only close the top cover once the hotplates have cooled down.

16 Troubleshooting

You can rectify minor faults on your appliance yourself. Read the troubleshooting information before contacting after-sales service. This will avoid unnecessary costs.

⚠ **WARNING – Risk of injury!**
Improper repairs are dangerous.
- Repairs to the appliance should only be carried out by trained specialist staff.
- If the appliance is defective, call Customer Service. → *"Customer Service", Page 27*

⚠ **WARNING – Risk of electric shock!**
Improper repairs are dangerous.
- Repairs to the appliance should only be carried out by trained specialist staff.
- Only use genuine spare parts when repairing the appliance.
- If the power cord of this appliance is damaged, it must be replaced by the manufacturer, the manufacturer's Customer Service or a similarly qualified person in order to prevent any risk.

16.1 Malfunctions

Fault	Cause and troubleshooting
Burner goes out straight after being ignited.	The control knob was not held down for long enough. **1.** Keep the control knob pressed in for a few seconds after ignition. **2.** Push the control knob in firmly.
	Openings on the burner are soiled. ▸ Clean and dry the openings on the burner.
The burner flame is not uniform.	The burner parts are positioned incorrectly. **1.** Position the burner parts precisely and evenly. **2.** Ensure that the locking catches click into place in the recesses.
	Openings on the burner are soiled. ▸ Clean and dry the openings on the burner.
The burner flame goes out while the appliance is in operation.	Gas cylinder is empty. ▸ Replace the gas cylinder.
The appliance is not working.	The mains plug of the power cord is not plugged in. ▸ Connect the appliance to the power supply.

Fault	Cause and troubleshooting
The appliance is not working.	The circuit breaker is faulty. ▸ Check the circuit breaker in the fuse box.
	There has been a power cut. ▸ Check whether the lighting in your room or other appliances are working.
	The safety valve for the gas line is closed. ▸ Open the safety valve for the gas line.
The burner does not ignite.	There has been a power cut. ▸ Check whether the lighting in your room or other appliances are working.
	The ignition plugs are wet. ▸ Light the gas burner with a gas lighter or a match.
The flame for the oven does not burn through all outlet openings.	Openings on the burner are soiled. ▸ The burner must be professionally cleaned.
All dishes prepared in the oven burn within a short period of time.	The thermostat is faulty. ▸ Call customer service.
The oven switches off.	The gas pressure is too high or too low. ▸ Light the gas burner with a gas lighter or a match.
	Incorrect installation. ▸ Call customer service.
	Power failure. ▸ Check the oven's power supply.
The cooling fan is not working.	The cooling fan is faulty. ▸ Call customer service.
The oven lighting is switched off.	The oven light bulb is faulty. ▸ Call customer service.
The glass cover closes quickly	Hinge screws on the lid are loose ▸ Tighten the hinge screws on the right and left sides of the lid.

16.2 Replacing the oven light bulb

If the lighting in the cooking compartment fails, change the oven lamp.

Note: Heat-resistant, 25-watt lamps are available from the after-sales service or specialist retailers. Only use these suitable lamps. Hold the new lamps only with a clean, dry towel. This increases the service life of the lamp.

⚠ **WARNING – Risk of burns!**

The appliance and its parts that can be touched become hot during use.

- ▸ Caution should be exercised here in order to avoid touching heating elements.
- ▸ Young children under 8 years of age must be kept away from the appliance.

⚠ **WARNING – Risk of electric shock!**

When changing the bulb, the bulb socket contacts are live.

- ▸ Before replacing the bulb, ensure that the appliance is switched off in order to prevent a potential electric shock.
- ▸ Also unplug the appliance from the mains or switch off the circuit breaker in the fuse box.

Requirements

- The appliance is disconnected from the power supply.
- The cooking compartment has cooled down.
- You must have a new halogen lamp to replace the old one.

1. Place a tea towel in the cooking compartment to prevent damage.
2. Turn the glass cover anti-clockwise.

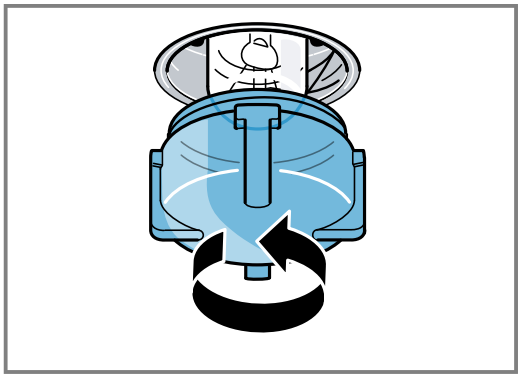

3. Replace the oven lamp with the same type of lamp.
4. Screw in the glass cover.
5. Remove the tea towel from the cooking compartment.
6. Connect the appliance to the power supply.

17 Transportation and disposal

You can find out here how to prepare your appliance for transportation. You will also find out how to dispose of old appliances.

17.1 Disposing of old appliance

Valuable raw materials can be reused by recycling.

1. Unplug the appliance from the mains.
2. Cut through the power cord.
3. Dispose of the appliance in an environmentally friendly manner.
   Information about current disposal methods are available from your specialist dealer or local authority.

This appliance is labelled in accordance with European Directive 2012/19/EU concerning used electrical and electronic appliances (waste electrical and electronic equipment - WEEE).
The guideline determines the framework for the return and recycling of used appliances as applicable throughout the EU.

17.2 Transporting the appliance

Keep the original appliance packaging. Only transport the appliance in the original packaging. Observe the transport arrows on the packaging.

1. Secure all moving parts in and on the appliance using adhesive tape that can be removed without leaving any traces.
2. Slide all accessories, such as baking trays, into the corresponding slots with thin cardboard at the edges, in order to avoid damaging the appliance.
3. Place cardboard or similar between the front and rear side to prevent knocks against the inside of the door glass.
4. Secure the door and, if available, the top cover to the appliance sides using adhesive tape.

If the original packaging is no longer available

1. In order to guarantee sufficient protection against any transport damage, pack the appliance in protective packaging.
2. Always transport the appliance upright.
3. Do not hold the appliance by the door handle or the connections on the rear, as these could be damaged.
4. Do not place any heavy objects on the appliance.

18 Customer Service

Detailed information on the warranty period and terms of warranty in your country is available from our after-sales service, your retailer or on our website.
If you contact Customer Service, you will require the product number (E-Nr.) and the production number (FD) of your appliance.
The contact details for Customer Service can be found in the enclosed Customer Service directory or on our website.
This product contains light sources from energy efficiency class G.

18.1 Product number (E-Nr.) and production number (FD)

You can find the product number (E-Nr.) and the production number (FD) on the appliance's rating plate. You will see the rating plate with these numbers if you open the appliance door.
Make a note of your appliance's details and the Customer Service telephone number to find them again quickly.

19 How it works

Here, you can find the ideal settings for various types of food as well as the best accessories and cookware. These recommendations are perfectly tailored to your appliance.

19.1 Proceed as follows:

Note:
If you are using the appliance for the first time, follow this important information:

- → *"Safety", Page 2*
- → *"Saving energy", Page 7*
- → *"Preventing material damage", Page 6*

1. Select a suitable type of food from the overview of food.
   Note: If you do not find the exact food or application that you want to prepare or implement, look for a similar dish and take the general information into consideration.
2. Remove any accessories from the cooking compartment.
3. Select suitable cookware and accessories.
   Use the cookware and the accessory listed in the recommended settings.
4. Only preheat the appliance if the recipe or the recommended settings tell you to do so.
5. Use the recommended settings when configuring the appliance settings.

6. ⚠ **WARNING – Risk of scalding!**
Hot steam may escape when you open the appliance door. Steam may not be visible, depending on the temperature.
- Open the appliance door carefully.
- Keep children at a safe distance.

When the dish is ready, switch off the appliance.

19.2 Condensation

This section tells you how condensation is formed, how you can prevent damage, and how you can prevent condensation from forming.
When you are cooking food in the cooking compartment, a lot of steam may form in the cooking compartment. Since your appliance is extremely energy-efficient, only a small amount of heat escapes during operation. Due to the significant differences in temperature between the appliance interior and the external parts of the appliance, condensation may build up on the appliance door, the control panel or the front panels of adjacent kitchen cabinets. The formation of condensation is a normal physical phenomenon.
In order to prevent damage, wipe away the condensation.
When you preheat the appliance, you reduce the build-up of condensation.

19.3 Cooking tips

Observe this information when preparing food.
- The temperature and cooking time depend on the amount of food and the recipe. Settings ranges are specified for this reason. Select the lower value first.
- The setting values apply to food placed in the cooking compartment while the cooking compartment is still cold.
  Do not place accessories into the cooking compartment until it has finished preheating.
- Remove any accessories that are not being used from the cooking compartment.
- Ensure that the accessory slides in the right way round.

Reference gases

Unsuitable gas mixtures may impair the cooking power level.

Note: The appliance was manufactured in accordance with the reference gases specified in the standards. If you use gas that does not correspond to the specified gas mixture and gas pressure, under certain circumstances, the power level and the heat output do not deliver the desired result.

Gas designation	Gas mixture in %
G20	CH_4=100
G25	CH_4=86, N_2=14
G30	n-C_4H_{10}=50, i-C_4H_{10}=50

19.4 Cakes and other baked goods

Recommended settings for cakes and baked items
The temperature and baking time depend on the quantity and consistency of the dough. This is why temperature ranges are given in the tables. Set a short cooking time first. If required, set a longer cooking time next time. A lower temperature results in more even browning.

Baking tips

We have compiled a few tips to help you achieve a good baking result.

Topic	Tip
You want your cake to rise evenly.	■ Only grease the base of the springform cake tin. ■ After baking, use a knife to carefully loosen the cake from the baking tin.
You do not want small baked goods to stick to each other when baking.	Leave a minimum clearance of 2 cm around each item that is to be baked. This allows enough space for the baked goods to expand and brown on all sides.
Determine whether the cake is ready.	Push a cocktail stick into the highest point on the cake. If the cocktail stick comes out clean, the cake is ready.
You want to bake according to your own recipe.	Use similar items in the baking tables as a guide.
Use bakeware made of silicone, glass, plastic or ceramic.	■ The baking tin must be heat-resistant up to 250 °C. ■ Cakes in these types of bakeware brown less.

Recommended settings

Cakes in tins

Meal	Accessory/cookware	Shelf position	Type of heating	Temperature in °C	Cooking time, minutes
Sponge cake	Vienna ring tin/loaf tin	3	▭	170[1]	50-60

[1] Preheat the appliance for 10 minutes. Never use the rapid heating function for preheating.

Meal	Accessory/cookware	Shelf position	Type of heating	Temperature in °C	Cooking time, minutes
Apple pie	Springform cake tin, 20 cm diameter	3	⊟	170[1]	80-90
Basbousa	Ovenproof dish	3	⊟	170[1]	25-35

[1] Preheat the appliance for 10 minutes. Never use the rapid heating function for preheating.

Small yeast cakes

Meal	Accessory/cookware	Shelf position	Type of heating	Temperature in °C	Cooking time, minutes
Pastries made from yeast dough	Baking tray	4	⊟	150 [1]	30-35

[1] Preheat the appliance for 10 minutes. Never use the rapid heating function for preheating.

19.5 Bread and bread rolls

The values for bread dough apply to both dough placed on a tray and dough placed in a loaf tin.

ATTENTION!
When the cooking compartment is hot, any water inside it will create steam. The change in temperature may cause damage.
- Never pour water into the cooking compartment when it is still hot.
- Never place cookware containing water on the cooking compartment floor.

Recommended settings

19.6 Pizza, quiche and savoury cakes

Here, you can find information about pizza, quiche and savoury cakes.

Recommended settings

Pizza, quiche, börek and savoury cakes/tarts

Meal	Accessory/cookware	Shelf position	Type of heating	Temperature in °C	Cooking time, minutes
Pizza	Baking tray	4	⊟	170 [1]	25-30

[1] Preheat the appliance for 10 minutes. Never use the rapid heating function for preheating.

19.7 Bakes and gratins

How well cooked the bake is will depend on the size of the ovenware and the thickness of the bake.
Use wide, shallow cookware for bakes and gratins.
Food takes longer to cook in deep, narrow cookware and it browns more on top.
You can prepare food in baking tins or in the universal pan.
- Baking tins on the wire rack: Shelf position 2
- Universal pan: Shelf position 2

You can cut energy use by cooking different items at the same time. Position baking tins next to one another in the cooking compartment.

⚠ **WARNING – Risk of injury!**
If hot glass cookware is placed on a wet or cold surface, the glass may shatter.
- Place hot glass ovenware on a dry mat after cooking.

Recommended settings

Bakes and gratins

Meal	Accessory/cookware	Shelf position	Type of heating	Temperature in °C	Cooking time, minutes
Meatballs with potatoes, in sauce	Ovenproof dish	2	▢	180	70-80
Potato gratin, raw ingredients, 4 cm deep	Ovenproof dish	3	▢	190[1]	40-50
Vegetable terrine	Ovenproof dish	2	▢	200	75-85
Chicken with potatoes	Ovenproof dish	3	▢	200	70-80

[1] Preheat the appliance for 10 minutes. Never use the rapid heating function for preheating.

19.8 Poultry, meat, fish and toast

The table lists values for poultry, meat, fish and toast, with default values for the weight.

If you prepare dishes that are larger or heavier than what is specified in the recommended settings, always use the lower temperature. If cooking more than one item, use the weight of the heaviest item as a basis for determining the cooking time. The individual pieces must be approximately the same size.

Recommended settings

Meat

Dish	Accessory/cookware	Shelf position	Power level	Type of heating	Cooking time, mins
Burger, x 8, 1 kg	Wire rack	4	[1]		30-40[2]
Burger, x 10, 0.5 kg	Wire rack	4			20-30[2]

[1] Preheat the appliance for 10 minutes. Never use the rapid heating function for preheating.
[2] Slide the universal pan underneath the wire rack.

Fish

Dish	Accessory/cookware	Shelf position	Power level	Type of heating	Cooking time, mins
Whole fish, x 2, 0.5 kg	Wire rack	4			20-30[1]
Fish pieces, x 8, 0.5 kg	Wire rack	4			20-30[1]

[1] Slide the universal pan underneath the wire rack.

Toast

Dish	Accessory/cookware	Shelf position	Power level	Type of heating	Cooking time, mins
Toasting bread, 18 slices	Wire rack	5	[1]		2-4

[1] Preheat the appliance for 10 minutes. Never use the rapid heating function for preheating.

19.9 Yoghurt

You can also use your appliance to make your own yoghurt.

Making yoghurt

1. Remove the accessories and shelves from the cooking compartment.
2. Heat 1 litre of milk (3.5% fat) to 90 °C on the hob and then leave it to cool down to 40 °C. Only heat UHT milk to 40 °C.
3. Stir 30 g yoghurt into the milk.
4. Pour the mixture into small containers, e.g. small jars with lids.
5. Cover the containers with film, e.g. cling film.
6. Place the containers on the cooking compartment floor.
7. After making the yoghurt, leave it to cool in the refrigerator.

Recommended settings

Yoghurt

Meal	Accessory/cookware	Shelf position	Type of heating/ function	Temperature in °C	Cooking time, minutes
Yoghurt	Cup/jar	Cooking compartment floor		-	4–5 hours

19.10 Test dishes

This table has been produced for test institutes to facilitate the inspection of the appliance.

Baking

Please take note of the following information if you are baking test dishes.

General information

- The setting values apply to food placed in the cooking compartment while the cooking compartment is still cold.
- Observe the notes about preheating in the tables. These setting values assume that the rapid heating function is not being used.

Shelf positions

Shelf positions for baking on one level:
Baking tins on the wire rack: Shelf position 3

Note: When grilling, insert the baking tray as well. Any dripping liquid is then collected by the baking tray and the cooking compartment is kept clean.

Recommended settings

Cakes in tins

Meal	Accessory/cookware	Shelf position	Type of heating	Temperature in °C	Cooking time, minutes
Sponge cake	[1]	3		160[2]	35-40

[1] Place the glass cookware side-by-side in the centre of the wire rack. Use heat-resistant glass cookware only. Never set hot glass cookware down on a cold or wet surface after taking it out of the oven. This may cause the glass cookware to crack.
[2] Preheat the appliance for 15 minutes. Never use the rapid heating function for preheating.

Toast

Dish	Accessory/cookware	Shelf position	Power level	Type of heating	Cooking time, mins
Toasting bread, 15 slices[1]	Wire rack	5	[2]		1.5-2.5

[1] Place the bread for toasting in the centre of the wire rack.
[2] Preheat the appliance for 4 minutes. Never use the rapid heating function for preheating.

20 Installation instructions

The installation instructions contain instructions for the gas connection and for the gas conversion's assembly .

Note: For after-sales service only.

20.1 General information

Your appliance must only be converted from one gas type to another by authorised personnel who have received appropriate training. The procedure must always be carried out in accordance with the instructions in this manual.
Incorrect connection and incorrect settings may damage the appliance. The appliance manufacturer shall accept no liability for incorrect connections or incorrect settings.

- Wear protective gloves so that you do not cut yourself. Accessible parts may have sharp edges.
- Do not place the appliance behind a decorative door or the door of a kitchen unit. There is a risk of overheating.
- Never install the appliance in boats or in vehicles.
- Always closely observe the symbols on the rating plate. If there is no symbol that is relevant to your country, comply with the technical guidelines in force in your country when configuring the appliance settings.
- Find out which gas type and which gas pressure your local gas supply network uses before installing the appliance. Before using the appliance, ensure that all settings have been set correctly.
- Always comply with local and national guidelines and regulations.
- The settings for configuring your appliance can be found on the rating plate on the rear of the appliance. The gas type set at the factory is marked with an asterisk (*).
- After converting the appliance from one gas type to another, the new gas type must be labelled on the rating plate.
  - Use the gas conversion label to do this.
  - (*) is used to indicate the gas type on the label.
  - Stick the label on which the gas conversion is marked with a star (*) in the designated location on the rating plate.
- The changes made to the appliance and the type of connection are essential to enabling the appliance to work safely and in accordance with the relevant regulations.
- Switch off the power supply and gas supply before carrying out any work.
- After working on the gas connection, always check that the connection is not leaking. The manufacturer accepts no responsibility for a gas leak at a manipulated gas connection.

⚠ WARNING – Risk of explosion!

A gas leak could occur. If you move the appliance after the gas supply has been established, a gas leak could occur.

- ▸ Do not move the appliance once the gas supply is connected.
- ▸ If you move the appliance, check that the connections are not leaking.

ATTENTION!

Do not hold and move the appliance at the gas pipe (collector). Damage to the gas pipe may lead to gas leak. The gas pipe is not designed for the weight of the appliance.

- ▸ Do not hold and move the appliance at the gas pipe.

20.2 Appliance information

Enter the factory settings for the gas type and gas pressure in the table below and then add the applicable gas type and gas pressure settings for once conversion has been carried out.

E no.	FD
After-sales service telephone number	
Type of gas/gas pressure The data can be found on the rating plate.	
Type of gas/gas pressure Data following gas conversion	

20.3 Selecting the gas connection side

On many appliances, you can carry out the gas connection on the right- or left-hand side. If necessary, you can change the connection side.

Requirements

- Shut off the main gas line.
- Seal the gas connecting piece on the side that is not being used with a blind plug.

1. Place the new seal in the blind plug. Ensure that the seal is seated correctly.
2. **Note:** Use a torque wrench when connecting the appliance.

   Secure the gas connecting piece to the appliance **using a 22 mm spanner** and place the blind plug onto the connecting piece using a 24 mm spanner.

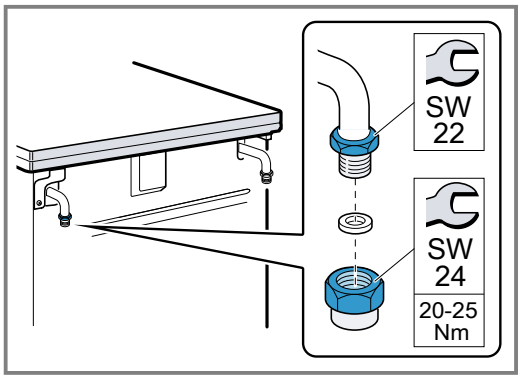

3. After changing the connection side, carry out a leak test. You can find additional information about this in the section entitled "Leak and function test" → *Page 37*.

20.4 Gas connection

These instructions apply only if the appliance is installed in countries that are specified on the rating plate.

If the appliance is installed and used in a country that is not specified on the rating plate, add installation and assembly instructions that contain the necessary information for the connection conditions for the appliance in the respective country.

Note: Use a torque wrench when connecting the appliance.

Natural gas connection (NG)

If you are using natural has (NG), the gas supply should be connected via a gas pipe or a safety gas hose with threaded fittings at both ends.

Connection types:

- *G½: EN ISO 228 G½ (TS EN ISO 228 G½)
- *R½: EN 10226 R½ (TS 61-210 EN 10226 R½)

⚠ **WARNING – Risk of explosion!**

A gas leak may occur due to a damaged connection nozzle.

- When connecting the gas pipe or safety gas hose, never tighten the gas connecting piece on the appliance using a 22 m spanner. This may damage the connecting piece.

Connection in accordance with EN ISO 228-1 G½ (TS EN ISO 228-1 G½)

1. Insert the new seal in the connecting piece. Ensure that the seal is seated correctly.
2. Secure the gas connecting piece to the appliance **using a 22 mm spanner** and place the connecting piece into the connecting piece using a 24 mm spanner.

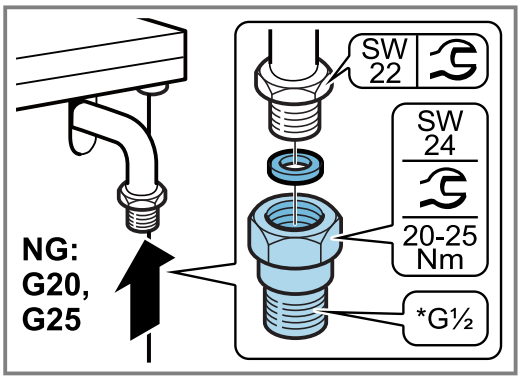

3. Place the new seal into the gas pipe or safety gas hose. Ensure that the seal is seated correctly.
4. Secure the connecting piece using a **24 mm spanner**. Use a 24 mm spanner to place the threaded fitting of the gas pipe or safety gas hose on the connecting piece and tighten it firmly.

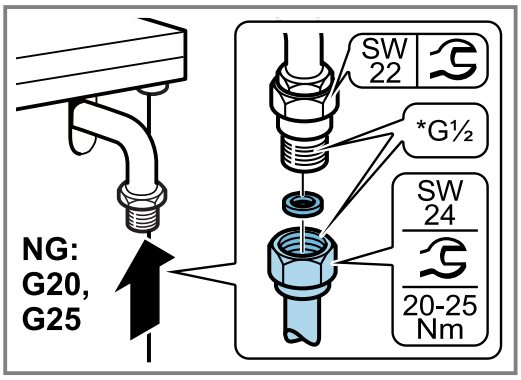

5. Open the gas connection shut-off. Carry out a leak test → *Page 37*.

Connection in accordance with EN 10226-1 R½ (TS 61-210 EN 10226-1 R½)

1. Insert the new seal in the connecting piece. Ensure that the seal is seated correctly.
2. Secure the gas connecting piece to the appliance **using a 22 mm spanner** and place the connecting piece into the connecting piece using a 24 mm spanner.

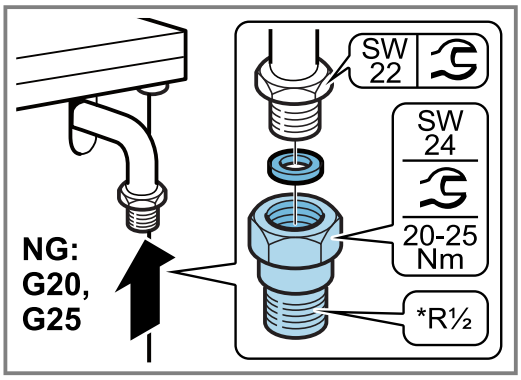

3. Secure the connecting piece using a **24 mm spanner**. Use a 24 mm spanner to place the threaded fitting of the gas pipe or safety gas hose on the connecting piece and tighten it firmly.

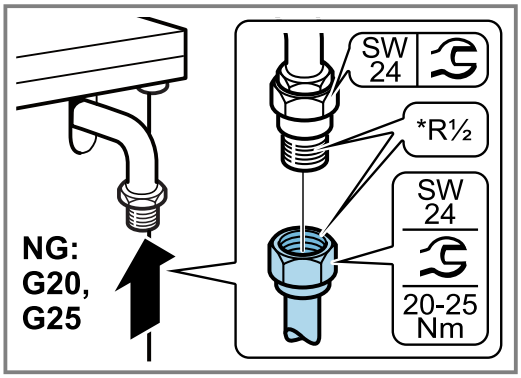

4. Open the gas connection shut-off. Carry out a leak test → *Page 37*.

Liquefied gas connection (LPG)

If you use liquefied gas (LPG), establish the gas connection via a gas hose or a fixed connection.
Observe the specific guidelines for each country.
If you are using a gas hose, observe the following:

- Use a safety gas hose or a plastic gas hose with a diameter of 8 or 10 mm.
- Secure the hose to the gas connection using an approved connecting device, e.g. a hose clamp.
- The hose must be short and completely leak-tight. The hose must not be longer than 1.5 m. Observe the applicable guidelines.
- Replace the gas hose once a year.

Connection with the gas hose

1. Insert the new seal in the connecting piece. Ensure that the seal is seated correctly.

2. Secure the gas connecting piece to the appliance **using a 22 mm spanner** and place the connecting piece into the connecting piece using a 24 mm spanner.

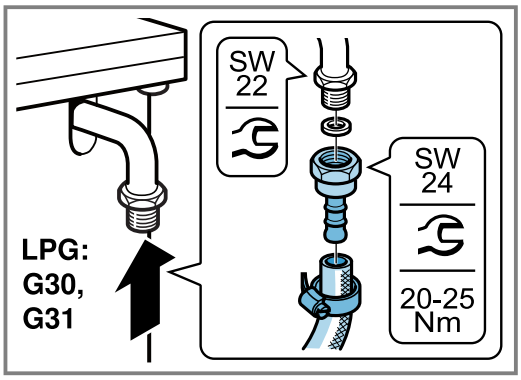

3. Fit the safety gas hose and use a pipe union or cable clamp to tighten it securely.

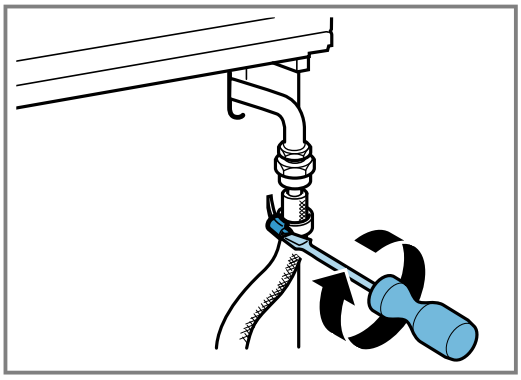

4. Open the gas connection shut-off. Carry out a leak test → *Page 37*.

20.5 Converting the gas type

You can convert the type of gas that has been set for the appliance.

Note: You can find more information about which gas types can be used with the appliance and the appropriate gas nozzles in the section entitled "Technical data – Gas". The numbers on the burners refer to their diameter.

Converting the gas type

- Replacing the gas connection part.
- Replace the burner nozzles.
- Depending on the gas setting that is configured at the factory, replace or tighten the bypass nozzles of the burner taps.
- If the nozzles for the oven burner and the grill burner are present, replace these.

After conversion

- Always test for leaks after converting the appliance to a different gas type. You can find additional information about this in the section entitled "Leak and function test" → *Page 37*.
- The burning behaviour must be checked after the product has been converted to a different gas type. You can find additional information about this in the section entitled "Checking the correct burner behaviour" → *Page 38*.
- Enter the newly set type of gas and gas pressure in the table. You can find additional information about this in the section entitled "Appliance information" → *Page 32*.

ATTENTION!

After converting the type of gas, label the type of gas that is now set.

- ▸ After converting the type of gas, **affix** the label with the specification of the gas type and the star shape at the designated location on the appliance's rating plate.

Parts for the gas conversion

The parts that you need for the gas conversion procedure described here are listed below.

Note:

The accessories supplied may differ depending on the appliance model.

- The gas connecting piece may vary depending on the gas type and the country-specific regulations.
- To determine the correct nozzle diameter, check the → *"Technical data – Gas", Page 38* table.
- Always use a new seal.
- **(*)** Never establish a gas connection without these parts.

	Explanation
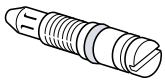	**Bypass nozzle**
	Burner nozzle
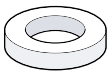	**(*) Seal**
	(*) Connecting piece for natural gas (NG: G20, G25) ■ TS 61-210 EN 10226 R½ ■ EN 10226 R½
	(*) Connecting piece for natural gas (NG: G20, G25) ■ TS EN ISO 228 G½ ■ EN ISO 228 G½
	(*) Connecting piece for liquid gas (LPG: G30, G31)
	Connecting piece
	Blind plugs (closure part)

Replacing the cooker burner nozzles

1. Switch off all of the knobs on the control panel.
2. Close the gas connection shut-off.
3. Remove the pan support grids or the pan support racks and the burner parts.

4. Use the socket wrench 7 to remove the cooker burner nozzles.

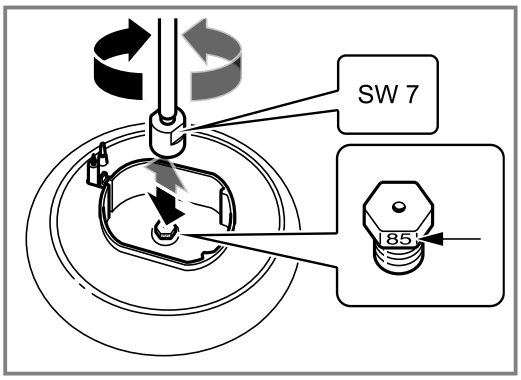

5. If your appliance features a wok burner with side access, remove the burner nozzle as shown below.

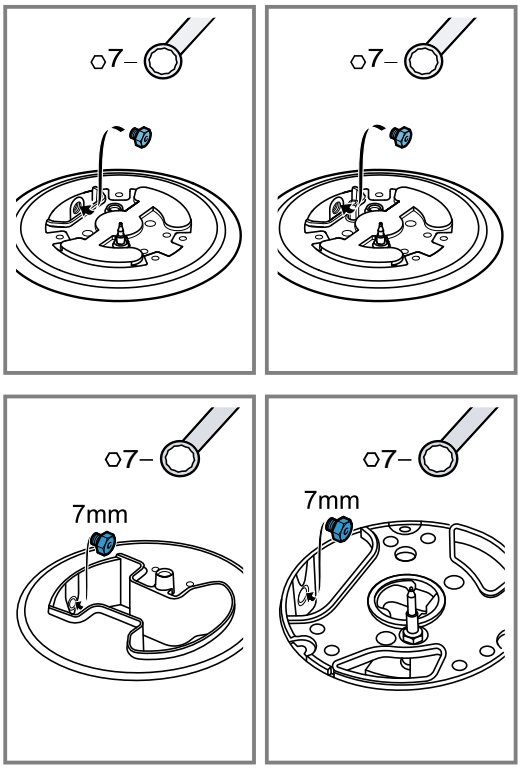

6. Look up the burner nozzles in the table. You can find additional information about this in the section entitled
   → *"Technical data – Gas", Page 38*.
   – Fit the new nozzles into the appropriate burners.
7. After replacing the nozzles, check that there are no leaks. You can find additional information about this in the section entitled "Leak and function test"
   → *Page 38*.

Adjusting or replacing bypass nozzles (small flame setting)

You can set the minimum flame height for the burners via the bypass nozzles.

Requirements

- Close the gas isolating equipment.
- Disconnect the appliance from the power supply.

1. Switch off all of the knobs on the control panel.
2. Remove the knobs one by one by holding them tightly against the control panel and pulling them towards you slightly.

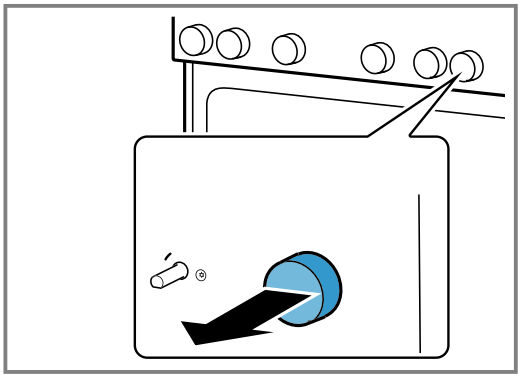

For ovens – converting the appliance from natural gas to liquid gas

If the appliance was set to natural gas at the time of delivery (factory setting) (NG: G20, G25) and is now being converted to liquid gas for the first time (LPG: G30, G31):

1. Tighten all of the bypass nozzles in the appliance clockwise to the limit stop. You can find additional information about this in the section entitled
   → *"Removing the control panel", Page 36*.
2. Then carry out the steps described in the section entitled
   → *"Setting the bypass nozzles", Page 37*.
3. Then carry out the steps described in the section entitled
   → *"Fitting the control panel", Page 37*.

Converting the appliance from liquid gas to natural gas

If you convert the appliance from liquid gas (LPG: G30, G31) to natural gas (NG: G20, G25) or if you already carried out this conversion and then undo this:

1. Turn all of the bypass nozzles in the appliance anticlockwise by 1/2 rotation for the setting. You can find additional information about this in the section entitled
   → *"Removing the control panel", Page 36*.
2. Then carry out the steps described in the section entitled
   → *"Setting the bypass nozzles", Page 37*.
3. Then carry out the steps described in the section entitled
   → *"Fitting the control panel", Page 37*.

Removing the control panel

1. If the appliance has an upper cover, remove this.
   – To do this, open the hob cover, grip the sides with both hands and pull it upwards. Ensure that you do not lose the hinges.

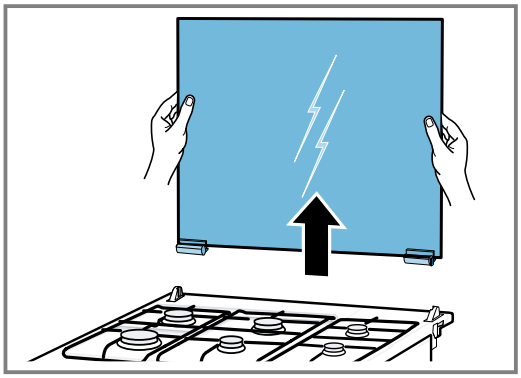

2. Remove the pan support grids or the pan support racks and the burner parts.

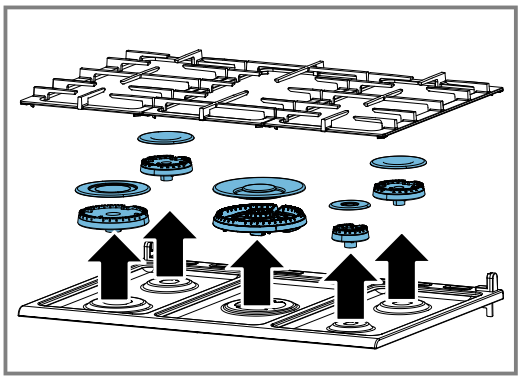

3. If burner connection screws are present on the hob, remove all of these.

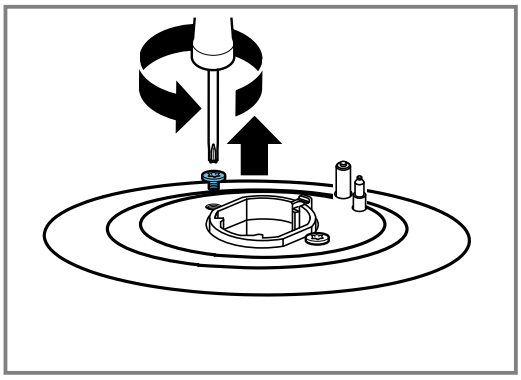

4. Remove the screws on the right- and left-hand hinge brackets.

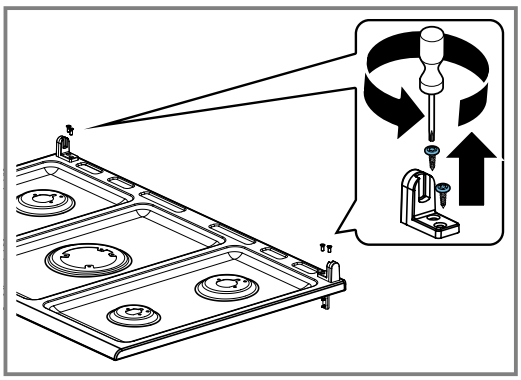

5. Undo the hob panel at the burner hub and lift it up.
   – Pull the hob panel forwards.

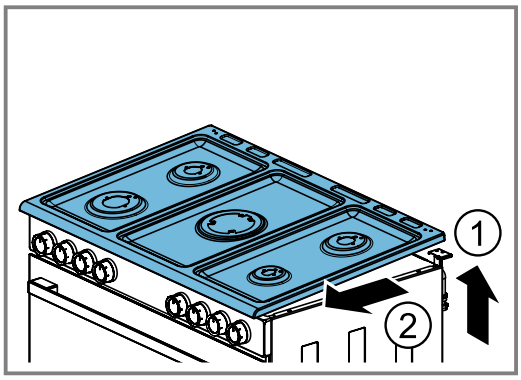

6. Remove the knobs on the front panel by pulling them towards you.
7. Remove the screws from the corners of the front panel.

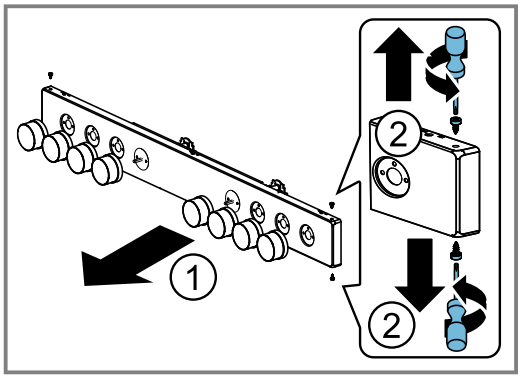

8. Remove the screws that become visible after you remove the knobs from the front panel.

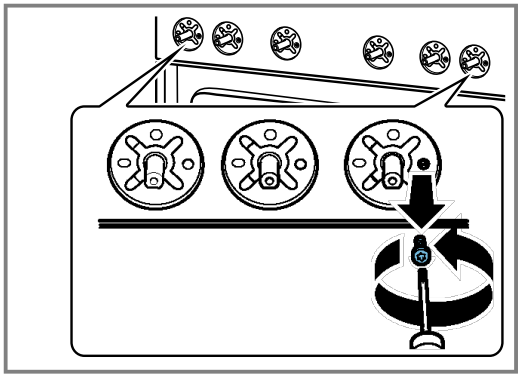

Setting the bypass nozzles

1. Use a flat-head screwdriver (no. 2) to set the bypass nozzles in accordance with the gas type that is to be set. To do this, follow the instructions in the section entitled
   → *"Converting the appliance from liquid gas to natural gas", Page 35* or in the section entitled
   → *"For ovens – converting the appliance from natural gas to liquid gas", Page 35*.

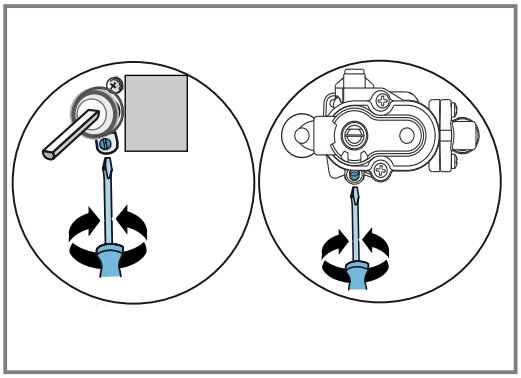

2. At this stage, it is important to test for leaks. You can find additional information about this in the section entitled
   → *"Leak test and function test", Page 37*.

Fitting the control panel

To reassemble, proceed in the reverse order of disassembly.

1. Take hold of the front panel with both hands and carefully fit it into place. Ensure that the cables are not damaged and the connections do not come loose.
2. Insert the screws that were removed from the front panel.
   – Insert the screws into the corners of the front panel.
3. Slide the hob panel backwards and slowly insert it.
4. Insert the screws on the right- and left-hand hinge brackets.
5. Insert the burner connection screws
6. Install the burner bases in their respective positions according to their size. Insert the ignition plugs into the corresponding openings next to the burner bases. Place the enamelled burner lids onto the centre of the corresponding burner bases and, in doing so, note the sizes. Fit the pan support grids and the pan support racks.
7. If the appliance has a covering plate, hold it vertically by both sides and slowly reinsert it into the holder.
8. Carefully insert the knobs.
   – At this stage, it is important to check that the gas burners are burning correctly. You can find additional information about this in the section entitled
   → *"Checking the correct burner behaviour", Page 38*.

✔ Check whether the appliance is working correctly.

Replacing the oven gas burner

Preparation

- Switch off all of the knobs on the control panel.
- Close the gas connection shut-off.
- Disconnect the appliance from the mains.

Replacing the oven's lower gas burner nozzle

1. On the rear cover, loosen the plastic screw on the power cable's mounting part.
   – Remove the screws on the rear cover and take the cover off.
2. Remove the two screws on the nozzle holder for the lower oven burner and carefully take the nozzle holder out.
   – Use a 7 mm socket wrench to remove the nozzle from the nozzle holder.

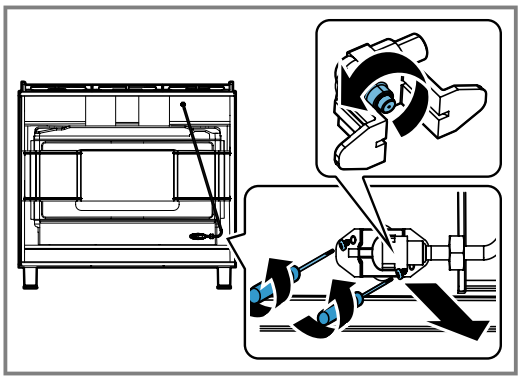

3. Select the appropriate nozzle from the table depending on the gas type that you converted to. You can find additional information about this in the section entitled
   → *"Technical data – Gas", Page 38*.
4. Insert and tighten the new nozzle. (Tightening torque 4 Nm)
   – At this stage, it is important to test for leaks. You can find additional information about this in the section entitled
   → *"Leak test and function test", Page 37*.
5. Carefully insert the nozzle holder. Insert the screws.
   – At this stage, it is important to test for leaks. You can find additional information about this in the section entitled
   → *"Leak test and function test", Page 37*.
6. Insert the rear cover of the oven and the screws.
   – On the rear cover, tighten the plastic screw on the power cable's mounting part.
7. At this stage, it is important to check that the gas burners are burning correctly. You can find additional information about this in the section entitled
   → *"Checking the correct burner behaviour", Page 38*.

20.6 Leak test and function test

The leak test must be carried out by two people.

⚠ **WARNING – Risk of explosion!**

Sparks, flames or open flames may cause explosions during the leak and function test.

- ▸ Ensure that no sparks are produced.
- ▸ Do not use any fire or naked flames.
- ▸ Only check the leak tightness using a suitable foam.

Gas leak

- Close the gas connection locking device.
- Ventilate the relevant location sufficiently.
- Check the gas and nozzle connections once more.
- Repeat the leak test → *Page 37*.

Checking the gas connection

1. Open the gas connection shut-off.
2. Apply suitable foam around the gas connection.
✔ If dispersions and bubbles occur on the foamy surface and these indicate that gas is escaping, follow the instructions in the section entitled "What to do if there is a gas leak" → *Page 37*.
3. Follow the same instructions for the part that is sealed with the blind plug.

Checking the cooker burner nozzles

Check the leak tightness of each nozzle.

1. Open the gas connection shut-off.
2. To check, carefully cover the hole in the burner nozzle with your finger or a special device.
3. Apply suitable foam around the nozzle.
4. Press on the burner knob and turn the knob anti-clockwise. Gas therefore comes to the nozzle.
✔ If dispersions and bubbles occur on the foamy surface and these indicate that gas is escaping, follow the instructions in the section entitled "What to do if there is a gas leak" → *Page 37*.

Checking the bypass nozzles

Check the leak tightness of each bypass nozzle.

1. Open the gas connection shut-off.
2. To check, carefully cover the hole in the burner nozzle with your finger or a special device.
3. Apply suitable foam around the bypass nozzle on the burner that is to be checked.
4. Press on the tap spindle and turn it anti-clockwise. Gas therefore comes to the nozzle.
✔ If dispersions and bubbles occur on the foamy surface and these indicate that gas is escaping, follow the instructions in the section entitled "What to do if there is a gas leak" → *Page 37*.

Checking the lower oven gas burner nozzle

Check the leak tightness of each bypass nozzle.

1. Open the gas connection shut-off.
2. To check, carefully cover the hole for the burner nozzle in the oven's lower gas burner with your finger or a special device.
3. Apply suitable foam around the nozzle.
4. Press the function control knob for the oven and turn the knob anti-clockwise. Gas therefore comes to the nozzle.
✔ If dispersions and bubbles occur on the foamy surface and these indicate that gas is escaping, follow the instructions in the section entitled "What to do if there is a gas leak" → *Page 37*.

20.7 Checking the correct burner behaviour

Check the burning and soot formation of each burner after the product has been converted to a different gas type. If there is a problem, compare the nozzle values with the values in the table.

Checking the correct burner behaviour of the cooker burner

1. Ignite the gas cooker burners in accordance with the instructions in the operating manual.
2. Set the gas cooker knob to the small flame setting. Check whether the flame safety system is working by keeping the flame at the "small flame" setting for 1 minute.
3. Check that the burners are burning correctly with both large and small flames.
✔ The flame must burn evenly and steadily.
4. Turn the burner knob back and forth quickly between the large flame setting and the small flame setting. Repeat this process several times.
✔ The gas flame must not flicker or go out.

Checking the correct burner behaviour for the lower oven gas burner

1. Ignite the lower oven gas burner in accordance with the instructions in the operating manual.
→ *"Basic operation", Page 18*
2. Open the oven door and observe the flame.
✔ The flame must burn evenly.
✔ The flame may fail during the first few minutes. However, the flame must stabilise after a few minutes.
3. Switch on the appliance for a few minutes to check whether the thermocouple becomes sufficiently warm.
✔ Adjust the settings, if required. If the bypass nozzle on the burner is faulty, replace this.

20.8 Technical data – Gas

The different types of gas and the corresponding values are listed.

Technical data – Gas

Note the following information for the gas types that are listed in the table for some burners.

Natural gas NG G20/20 mbar

Nozzle (mm)	Bypass	Burner type	Power (kW)	Min. power (kW)	Max. consumption G20 (l/h)
1.16	0.78	High-output burner	3.0	≤ 1.3	285 (l/h)
0.97	0.60	Standard-output burner	1.75	≤ 0.9	167 (l/h)
0.72	0.52	Economy burner	1.0	≤ 0.55	95 (l/h)
1.48	0.94	Wok burner	4.0	≤ 1.7	381 (l/h)

Nozzle (mm)	Bypass	Burner type	Power (kW)	Min. power (kW)	Max. consumption G20 (l/h)
1.48/0.70	0.92/0.57	Dual-flame wok burner	4.2	≤ 2.6	399 (l/h)
1.47	0.76	Oven burner	4.2	-	399 (l/h)
1.30	-	Grill burner	3.1	-	295 (l/h)

Liquid gas, butane, propane, G30/28-30 mbar

Nozzle (mm)	Bypass	Burner type	Power (kW)	Min. power (kW)	Max. consumption G30 (g/h)
0.85	0.49	High-output burner	3.0	≤ 1.3	218 (g/h)
0.65	0.40	Standard-output burner	1.75	≤ 0.9	127 (g/h)
0.50	0.32	Economy burner	1.0	≤ 0.55	73 (g/h)
1.00	0.59	Wok burner	4.0	≤ 1.7	291 (g/h)
0.95/0.44	0.57/0.30	Dual-flame wok burner	4.2	≤ 2.6	306 (g/h)
0.90	0.56	Oven burner	4.2	-	306 (g/h)
0.85	-	Grill burner	3.1	-	226 (g/h)

Liquid gas, butane, propane, G30/50 mbar

Nozzle (mm)	Bypass	Burner type	Power (kW)	Min. power (kW)	Max. consumption G30 (g/h)
0.75	0.49	High-output burner	3.0	≤ 1.3	218 (g/h)
0.58	0.40	Standard-output burner	1.75	≤ 0.9	127 (g/h)
0.43	0.32	Economy burner	1.0	≤ 0.55	73 (g/h)
0.80	0.59	Wok burner	3.4	≤ 1.7	248 (g/h)
0.68/0.43	0.57/0.30	Dual-flame wok burner	3.4	≤ 2.6	248 (g/h)
0.88	0.56	Oven burner	4.4	-	321 (g/h)
0.73	0.55	Grill burner	3.1	-	226 (g/h)

Thank you for buying a Bosch Home Appliance!

Register your new device on MyBosch now and profit directly from:

- **Expert tips & tricks for your appliance**
- **Warranty extension options**
- **Discounts for accessories & spare-parts**
- **Digital manual and all appliance data at hand**
- **Easy access to Bosch Home Appliances Service**

Free and easy registration – also on mobile phones:
www.bosch-home.com/welcome

Looking for help? You'll find it here.

Expert advice for your Bosch home appliances, help with problems or a repair from Bosch experts.
Find out everything about the many ways Bosch can support you:
www.bosch-home.com/service
Contact data of all countries are listed in the attached service directory.

BSH Hausgeräte GmbH
Carl-Wery-Straße 34
81739 München, GERMANY
www.bosch-home.com

A Bosch Company

9001848286 (031129)
en