BOSCH

Register your new device on MyBosch now and get free benefits:
bosch-home.com/welcome

MyBosch

Oven

HBG7341.1M

[en] User manual and installation instructions

Futher information and explanations are available online:

Table of contents

INFORMATION FOR USE

1 Safety 2
2 Preventing material damage 4
3 Environmental protection and saving energy 5
4 Familiarising yourself with your appliance 6
5 Operating modes 7
6 Accessories 9
7 Before using for the first time 10
8 Basic operation 10
9 Rapid heating 12
10 Time-setting options 12
11 Dishes 14
12 Favourites 15
13 Childproof lock 15
14 Basic settings 15
15 Home Connect 17
16 Cleaning and servicing 18
17 Cleaning aid 21
18 Drying 21
19 Appliance door 22
20 Rails 25
21 Troubleshooting 25
22 Disposal 27
23 Customer Service 27
24 Information regarding Free and Open Source Software 28
25 Declaration of Conformity 28
26 How it works 28

27 INSTALLATION INSTRUCTIONS 34
27.1 General installation instructions 34

⚠ 1 Safety

Observe the following safety instructions.

1.1 General information

- Read this instruction manual carefully.
- Keep the instruction manual and the product information safe for future reference or for the next owner.
- Do not connect the appliance if it has been damaged in transit.

1.2 Intended use

This appliance is designed only to be built into kitchen units. Read the special installation instructions.
Only a licensed professional may connect appliances without plugs. Damage caused by incorrect connection is not covered under the warranty.
Only use this appliance:

- To prepare meals and drinks.
- in private households and in enclosed spaces in a domestic environment.
- up to an altitude of max. 4000 m above sea level.

1.3 Restriction on user group

This appliance may be used by children aged 8 or over and by people who have reduced physical, sensory or mental abilities or inadequate experience and/or knowledge, provided that they are supervised or have been instructed on how to use the appliance safely and have understood the resulting dangers.
Do not let children play with the appliance.
Children must not perform cleaning or user maintenance unless they are at least 15 years old and are being supervised.
Keep children under the age of 8 years away from the appliance and power cable.

1.4 Safe use

Always place accessories in the cooking compartment the right way round.
→ *"Accessories", Page 9*

⚠ WARNING – Risk of fire!

Combustible objects that are left in the cooking compartment may catch fire.

- Never store combustible objects in the cooking compartment.
- If smoke is emitted, the appliance must be switched off or the plug must be pulled out and the door must be held closed in order to stifle any flames.

Loose food remnants, fat and meat juices may catch fire.

- Before using the appliance, remove the worst of the food residues and remnants from the cooking compartment, heating elements and accessories.

Opening the appliance door creates a draught. Greaseproof paper may come into contact with the heating element and catch fire.

- Never place greaseproof paper loosely over accessories when preheating the appliance and while cooking.
- Always cut greaseproof paper to size and use a plate or baking tin to hold it down.

⚠ WARNING – Risk of burns!

The appliance and its parts that can be touched become hot during use.

- Caution should be exercised here in order to avoid touching heating elements.
- Young children under 8 years of age must be kept away from the appliance.

Accessories and cookware get very hot.

- Always use oven gloves to remove accessories or cookware from the cooking compartment.

When the cooking compartment is hot, any alcoholic vapours inside may catch fire. The appliance door may spring open. Hot steam and jets of flame may escape.

- Only use small quantities of drinks with a high alcohol content in food.
- Do not heat spirits (≥ 15% vol.) when undiluted (e.g. for marinating or pouring over food).
- Open the appliance door carefully.

⚠ WARNING – Risk of scalding!

The accessible parts of the appliance become hot during operation.

- Never touch these hot parts.
- Keep children at a safe distance.

Hot steam may escape when you open the appliance door. Steam may not be visible, depending on the temperature.

- Open the appliance door carefully.
- Keep children at a safe distance.

If there is water in the cooking compartment when it is hot, this may create hot steam.

- Never pour water into the cooking compartment when the cooking compartment is hot.

⚠ WARNING – Risk of injury!

Scratched glass in the appliance door may develop into a crack.

- Do not use any harsh or abrasive cleaners or sharp metal scrapers to clean the glass on the oven door, as they may scratch the surface.

The appliance and its parts that can be touched may have sharp edges.

- Take care when handling and cleaning them.
- If possible, wear protective gloves.

The hinges on the appliance door move when the door is opened and closed, which could trap your fingers.

- Keep your hands away from the hinges.

Components inside the appliance door may have sharp edges.

- Wear protective gloves.

⚠ WARNING – Risk of electric shock!

Incorrect repairs are dangerous.

- Repairs to the appliance should only be carried out by trained specialist staff.
- Only use genuine spare parts when repairing the appliance.
- If the power cord of this appliance is damaged, it must be replaced by trained specialist staff.

If the insulation of the power cord is damaged, this is dangerous.

- Never let the power cord come into contact with hot appliance parts or heat sources.
- Never let the power cord come into contact with sharp points or edges.
- Never kink, crush or modify the power cord.

An ingress of moisture can cause an electric shock.
- Do not use steam- or high-pressure cleaners to clean the appliance.

If the appliance or the power cord is damaged, this is dangerous.
- Never operate a damaged appliance.
- Never pull on the power cord to unplug the appliance. Always unplug the appliance at the mains.
- If the appliance or the power cord is damaged, immediately unplug the power cord or switch off the fuse in the fuse box.
- Call customer services. → *Page 27*

⚠ WARNING – Risk of suffocation!

Children may put packaging material over their heads or wrap themselves up in it and suffocate.
- Keep packaging material away from children.
- Do not let children play with packaging material.

Children may breathe in or swallow small parts, causing them to suffocate.
- Keep small parts away from children.
- Do not let children play with small parts.

1.5 Halogen bulb

⚠ WARNING – Risk of burns!

The bulbs in the cooking compartment get very hot. There is still a risk of burning for some time after they have been switched off.
- Do not touch the glass cover.
- Avoid contact with your skin when cleaning.

⚠ WARNING – Risk of electric shock!

When changing the bulb, the bulb socket contacts are live.
- Before replacing the bulb, ensure that the appliance is switched off in order to prevent a potential electric shock.
- Also unplug the appliance from the mains or switch off the circuit breaker in the fuse box.

2 Preventing material damage

2.1 General

ATTENTION!

Alcoholic vapours may catch fire in the hot cooking compartment and cause permanent damage to the appliance. The appliance door may spring open due to an explosion and it may fall off. The door panels may shatter and fragment. Due to the resulting negative pressure, the cooking compartment may become considerably deformed inwards.
- Do not heat spirits (≥ 15% vol.) when undiluted (e.g. for marinating or pouring over food).

If there is water on the cooking compartment floor when operating the appliance at temperatures above 120 °C, this will damage the enamel.
- Do not use the appliance if there is water on the cooking compartment floor.
- Wipe away any water on the cooking compartment floor before operation.

Objects on the cooking compartment floor at over 50 °C will cause heat to build up. The baking and roasting times will no longer be correct and the enamel will be damaged.
- Do not place any accessories, greaseproof paper or foil of any kind on the cooking compartment floor.
- Only place cookware on the cooking compartment floor if a temperature under 50 °C has been set.

When the cooking compartment is hot, any water inside it will create steam. The change in temperature may cause damage.
- Never pour water into the cooking compartment when it is still hot.
- Never place cookware containing water on the cooking compartment floor.

The prolonged presence of moisture in the cooking compartment leads to corrosion.
- Allow the cooking compartment to dry after use. To do this, open the cooking compartment door completely or use the drying function.
- Do not keep moist food in the cooking compartment for a long time with the door closed.
- Do not store food in the cooking compartment.
- Take care not to trap anything in the appliance door.

Fruit juice dripping from the baking tray leaves stains that cannot be removed.
- When baking very juicy fruit flans, do not pack too much on the baking tray.
- If possible, use the deeper universal pan.

Using oven cleaner in a hot cooking compartment damages the enamel.
- Never use oven cleaner in the cooking compartment when it is still warm.
- Remove all food remnants from the cooking compartment and the appliance door before you next heat up the appliance.

If the seal is very dirty, the appliance door will no longer close properly during operation. This may damage the front of adjacent kitchen units.
- Keep the seal clean at all times.
- Never operate the appliance if the seal is damaged or missing.

Sitting or placing objects on the appliance door may damage it.

- ▸ Do not place, hang or support objects on the appliance door.
- ▸ Do not place cookware or accessories on the appliance door.

With certain models, accessories may scratch the door pane when closing the appliance door.

- ▸ Always push accessories fully into the cooking compartment.

If aluminium foil comes into contact with the door pane, it could cause permanent discolouration.

- ▸ Do not allow aluminium foil in the cooking compartment to come into contact with the door pane.

3 Environmental protection and saving energy

3.1 Disposing of packaging

The packaging materials are environmentally compatible and can be recycled.

- ▸ Sort the individual components by type and dispose of them separately.

3.2 Saving energy

If you follow these instructions, your appliance will use less power.

Only preheat the appliance if the recipe or the recommended settings tell you to do so.

→ *"How it works", Page 28*

- ■ Not preheating the appliance can reduce the energy used by up to 20%.

Use dark-coloured, black-coated or enamelled baking tins.

- ■ These types of baking tin absorb the heat particularly well.

Open the appliance door as little as possible during operation.

- ■ This maintains the temperature in the cooking compartment and eliminates the need for the appliance to reheat.

When baking multiple dishes, do so in succession or in parallel.

- ■ The cooking compartment is heated after baking the first dish. This reduces the baking time for the second cake.

If the cooking time is relatively long, you can switch the appliance off 10 minutes before the cooking time ends.

- ■ There will be enough residual heat to finish cooking the dish.

Remove any accessories that are not being used from the cooking compartment.

- ■ Accessories that are not being used do not need to be heated.

Allow frozen food to defrost before cooking.

- ■ This saves the energy that would otherwise be required to defrost it.

Switch off the display in the basic settings.

→ *"Basic settings", Page 15*

- ■ Energy is saved when the display is switched off.

Note:

The appliance requires:

- ■ A maximum of 2 W in networked standby mode
- ■ A maximum of 0.5 W in non-networked standby mode with the display switched off

4 Familiarising yourself with your appliance

4.1 Control panel

You can use the control panel to configure all functions of your appliance and to obtain information about the operating status.
On certain models, specific details such as colour and shape may differ from those pictured.

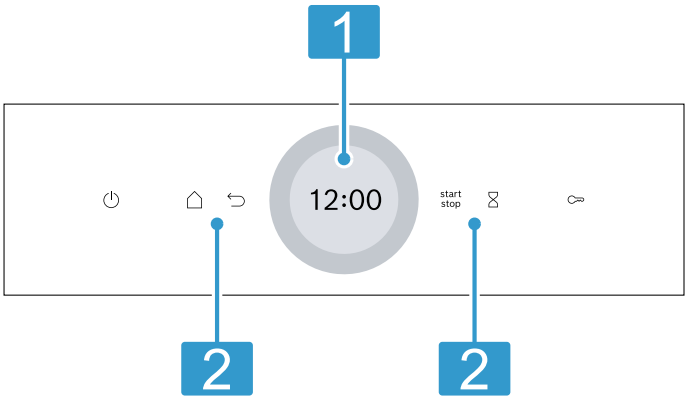

1	**Display with setting ring** You can use the digital setting ring to set the appliance via the display. You will see the current setting values, options or relevant information. → *"Display", Page 6*
2	**Buttons** You can use the buttons to directly set various functions. → *"Buttons", Page 6*

4.2 Buttons

You can use the buttons to directly select various functions.

Button	Function
⏻	Switch the appliance on or off. → *"Basic operation", Page 10*
⌂	Open the "Operating modes" menu. → *"Operating modes", Page 7*
↩	Go back one setting.
start stop	Start or pause operation. → *"Basic operation", Page 10*
⌛	Select the timer. → *"Setting the timer", Page 13*
🔑	Press and hold for approx. 4 seconds to activate the childproof lock. → *"Childproof lock", Page 15*

4.3 Display

The display is divided into different areas.

Digital setting ring

Use the digital setting ring on the outside of the display to change the setting values.
When you reach the minimum or maximum value available, this value remains in the display. If required, use the setting ring to turn the value back again.

Status indicator

Status information is shown at the top of the display.

Symbol	Meaning
⌛	Timer is activated. → *"Setting the timer", Page 13*
🔑	Childproof lock is activated. → *"Childproof lock", Page 15*
📶	WiFi signal strength for Home Connect. The more lines of the symbol are filled, the better the signal. If the symbol is struck through, there is no WiFi signal. If there is an "x" at the symbol, there is no connection to the Home Connect server. → *"Home Connect ", Page 17*
📱	Remote start with Home Connect is activated. → *"Home Connect ", Page 17*
🔧	Remote diagnostics with Home Connect for maintenance is activated. → *"Home Connect ", Page 17*

Settings area

The settings area is in the centre of the display.
You can see current options and settings that have already been made in the settings area.
The menu and other setting options are arranged horizontally. Selection lists for functions are vertically arranged. Swipe over the display to scroll in the settings area. To select a function, press the function on the display.
→ *"Setting the operating mode", Page 11*

Possible symbols in the settings area

Symbol	Meaning
✓	Confirm the setting value.
↺	Reset the setting value.
∧	Change the setting value while the appliance is in operation.

Note: A blue marking "new" or a blue dot on a function indicates that a new function, a new favourite or an update was downloaded to your appliance using the Home Connect app.

4.4 Cooking compartment

Various functions in the cooking compartment provide support when operating your appliance.

Shelf supports

The shelf supports in the cooking compartment enable you to place accessories at different heights.
→ *"Accessories", Page 9*
Your appliance has 5 shelf positions. The shelf positions are numbered from bottom to top.
You can remove the shelf supports, e.g. for cleaning.
→ *"Rails", Page 25*

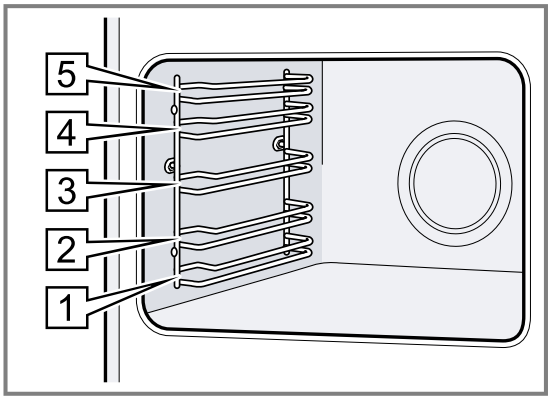

Self-cleaning surfaces

The back panel in the cooking compartment is self-cleaning. The self-cleaning surfaces are coated with a porous, matt ceramic layer and have a rough surface. When the appliance is in operation, the self-cleaning surfaces absorb splashes from roasting or grilling and break them down.

If the self-cleaning surfaces no longer clean themselves adequately during operation, heat up the cooking compartment specifically to the right temperature.
→ *"Regenerating self-cleaning surfaces in the cooking compartment", Page 20*

Lighting

One or more oven lights illuminate the cooking compartment.
When you open the appliance door, the light in the cooking compartment switches on. If the appliance door remains open for longer than around 18 minutes, the light switches off again.
For most operating modes, the lighting is switched on during operation. The lighting switches off again when the operation ends.

Cooling fan

The cooling fan switches on and off depending on the appliance's temperature. The hot air escapes above the door.

ATTENTION!

Covering the ventilation slots will cause the appliance to overheat.

- Do not cover the ventilation slots.

To ensure that the appliance cools down more quickly after operation, the cooling fan continues to run for a certain period afterwards.

Appliance door

If you open the appliance door during operation, the operation stops. If you close the appliance door, operation resumes automatically.

5 Operating modes

This is where you can find an overview of your appliance's operating modes and main functions.
Press ⌂ to open the menu.

Operating mode	Use
Types of heating	Select finely tuned types of heating for the optimal preparation of your food. → *"Types of heating", Page 7* → *"Basic operation", Page 10*
Favourites	Use your own saved settings. → *"Favourites", Page 15*
Dishes	Use programmed, recommended settings for various types of food. → *"Dishes", Page 14*
Cleaning	Select the cleaning function for the cooking compartment. → *"Cleaning aid", Page 21* → *"Drying", Page 21*
Basic settings	Adjust the basic settings. → *"Basic settings", Page 15*

Home Connect

With Home Connect, you can connect and remotely control the oven with a mobile device, and use the full functionality of the appliance.
Depending on the appliance type, additional or more comprehensive functions are available for your appliance with the Home Connect app. You can find more information about this in the app.
→ *"Home Connect ", Page 17*

5.1 Types of heating

To ensure that you always find the right type of heating to cook your food, we explain the differences and applications below.
The symbols for each type of heating help you to remember them.

When you select a type of heating, the appliance suggests a suitable temperature or setting. You can use these values or change them within the specified range.

For temperature settings above 275 °C and grill setting 3, the appliance reduces the temperature to approx. 275 °C or grill setting 1 after approx. 40 minutes.

Symbol	Type of heating	Temperature range	What it's used for and how it works
	3D hot air	30 - 275 °C	Bake or roast on one or more levels. The fan distributes the heat from the ring-shaped heating element in the back wall evenly around the cooking compartment.
	Top/bottom heating	30 - 300 °C	Traditionally bake or roast on one level. This type of heating is especially good for cakes with moist toppings. The heat is emitted evenly from above and below.
	Gentle hot air	125 - 250 °C	Cook selected dishes gently on one level without preheating. The fan distributes the heat from the ring-shaped heating element in the back wall evenly around the cooking compartment. The food is cooked in phases using residual heat. Always keep the appliance door closed when cooking. This type of heating is used to determine the energy consumption in air recirculation mode and the energy efficiency class.
	Air Fry	30 - 300 °C	Cook until crispy, on one level with little fat. Especially suitable for food that is usually fried in oil, e.g. chips.
	Gentle top/bottom heating	150 - 250 °C	Gently cook selected dishes. Heat is emitted from above and below. This type of heating is used to measure the energy consumption in the conventional mode.
	Circulated air grilling	30 - 300 °C	Roast poultry, whole fish or larger pieces of meat. The grill element and the fan switch on and off alternately. The fan circulates the hot air around the food.
	Full-surface grill	Grill settings: 1 = low 2 = medium 3 = high	Grill flat items such as steak and sausages, or make toast. Gratinate food. The entire area below the grill element becomes hot.
	Centre-area grill	Grill settings: 1 = low 2 = medium 3 = high	Grill small quantities such as steak and sausages, or make toast. Gratinate small quantities of food. The central area below the grill element becomes hot.
	Pizza setting	30 - 275 °C	Cook pizza or food that requires a lot of heat from below. The bottom heating element and the ring-shaped heating element in the back wall heat the cooking compartment.
	Slow cooking	70 - 120 °C	Slowly and gently cook seared, tender pieces of meat in uncovered cookware. The heat is emitted evenly from above and below at a low temperature.
	Defrost	30 - 60 °C	Gently defrost frozen food.
	Bottom heating	30 - 250 °C	Final baking or cooking food in a bain marie. The heat is emitted from below.
	Keeping warm	50 - 100 °C	Keep cooked food warm.
	Plate warming	30 - 90 °C	Preheat cookware.

5.2 Temperature

With most types of heating ≋, you can read the current temperature in the cooking compartment from approx. 30 °C and the set temperature side-by-side on the display during heating, e.g. 120|210 °C.
When you are preheating the appliance, the optimal time to place the food in the cooking compartment is as soon as the displayed temperature in the cooking compartment and the set temperature are the same.

Note: Due to thermal inertia, the temperature that is displayed may differ slightly from the actual temperature inside the cooking compartment.

Residual heat indicator
When the appliance is switched off, a red line around the control ring indicates the residual heat in the cooking compartment. The further the temperature drops, the darker the ring. The ring goes out completely at approx. 60 °C.

6 Accessories

Use original accessories. These have been made especially for your appliance.

Note: Accessories may become deformed if they get hot. Deformation has no effect on function. As the accessory cools down, it will regain its original shape.

The accessories supplied may differ depending on the appliance model.

Accessories		Use
Wire rack	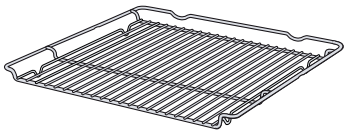	▪ Cake tins ▪ Ovenproof dishes ▪ Cookware ▪ Meat, e.g. roasting joints or steak ▪ Frozen meals
Universal pan	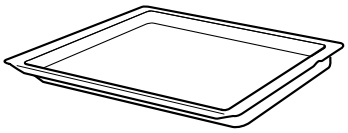	▪ Moist cakes ▪ Baked items ▪ Bread ▪ Large roasts ▪ Frozen meals ▪ Catch dripping liquids, e.g. fat when grilling food on the wire rack.
Baking tray	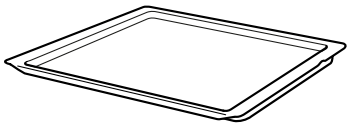	▪ Tray bakes ▪ Small baked items
Air Fry & grill tray, enamelled	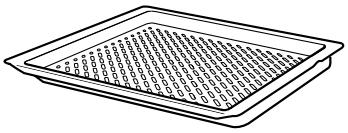	▪ Bake until crispy, for food that is usually fried in oil, e.g. chips. ▪ Grilling food.

6.1 Locking function

The locking function prevents the accessories from tilting when they are pulled out.
You can pull out the accessories approximately halfway without them tipping. The accessories must be inserted into the cooking compartment correctly for the tilt protection to work properly.

6.2 Sliding accessories into the cooking compartment

Always slide the accessory into the cooking compartment the right way round. This is the only way to ensure that accessories can be pulled out approximately halfway without tipping.

1. Turn the accessories so that the notch a is at the rear and is facing downwards.
2. Insert the accessory between the two guide rods for a shelf position.

Wire rack	Insert the wire rack with the open side facing the appliance door and the curved lip ⌣ facing downwards. 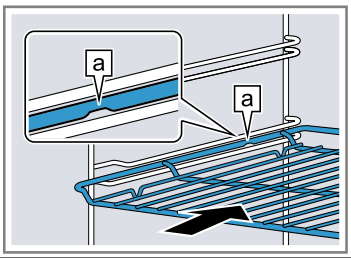
Baking tray E.g. universal pan or baking tray	Slide the tray in with the sloping edge b towards the appliance door. 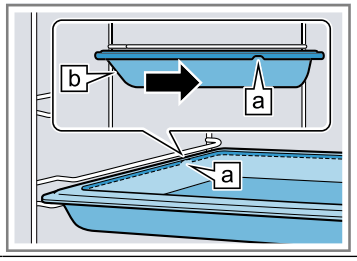

3. Push the accessory all the way in, making sure that it does not touch the appliance door.

Note: Take any accessories that you will not be using out of the cooking compartment while the appliance is in operation.

Combining accessories

You can combine the wire rack with the universal pan to catch any liquid that drips down.

1. Place the wire rack on the universal pan so that both spacers [a] are on the rear edge of the universal pan.
2. Insert the universal pan between the two guide rods for a shelf position. In so doing, the wire rack is on top of the upper guide rod.

Wire rack on universal pan	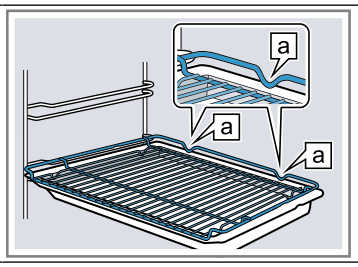

6.3 Other accessories

You can purchase other accessories from our after-sales service, specialist retailers or online.
You will find a comprehensive range of products for your appliance in our brochures and online:
www.bosch-home.com
Accessories vary from one appliance to another. When purchasing accessories, always quote the exact product number (E no.) of your appliance.
You can find out which accessories are available for your appliance in our online shop or from our after-sales service.

7 Before using for the first time

Configure the settings for initial start-up. Clean the appliance and accessories.

7.1 Performing initial start-up

After connecting the appliance to the power supply, you must configure the settings for its initial start-up. It may take a few minutes for the settings to appear on the display.

1. Press ⏻ to switch the appliance on.
✔ The first setting appears.
2. To change the setting as required, press a value in the list or change the value using the setting ring. Possible settings:
   – Language
   – Home Connect → *"Home Connect ", Page 17*
   – Time
     → *"Setting the time", Page 16*
3. Press ✓ and switch to the next setting.
4. Work through the settings and make changes as required.
✔ After the last setting, a message appears on the display confirming that the initial start-up is complete.
5. To check the appliance before heating for the first time, open and close the appliance door once.

7.2 Cleaning the appliance before using it for the first time

Before using the appliance to cook food for the first time, you must clean the cooking compartment and accessories.

1. Remove the product information and the accessories from the cooking compartment. Remove any leftover packaging, such as polystyrene pellets, and any adhesive tape that is in or on the appliance.
2. Wipe the smooth surfaces in the cooking compartment with a soft, damp cloth.
3. Press ⏻ to switch the appliance on.
4. Apply the following settings:

Type of heating	3D hot air
Temperature	Maximum
Cooking time	1 hour

→ *"Basic operation", Page 10*

5. Start the operation.
   – Ventilate the kitchen while the appliance is heating.
✔ When the time has elapsed, a signal sounds. A message appears on the display confirming that the operation has finished.
6. Press ⏻ to switch the appliance off.
7. Once the appliance has cooled down, clean the smooth surfaces in the cooking compartment with a detergent solution and a dish cloth.
8. Clean the accessories thoroughly using a detergent solution and a dish cloth or soft brush.

8 Basic operation

8.1 Switching on the appliance

▸ Press ⏻ to switch the appliance on.
✔ The display shows the menu.

8.2 Switching off the appliance

Switch your appliance off when you are not using it. The appliance will switch itself off automatically if it is not used for a certain period of time.

▸ Press ⏻ to switch the appliance off.

- ✔ The appliance switches off. Any functions currently in progress are cancelled.
- ✔ The time or residual heat indicator appears on the display.

8.3 Starting the operation

You must start each operation.

ATTENTION!

If there is water on the cooking compartment floor when operating the appliance at temperatures above 120 °C, this will damage the enamel.

- ▸ Do not use the appliance if there is water on the cooking compartment floor.
- ▸ Wipe away any water on the cooking compartment floor before operation.
- ▸ Press start stop to start the operation.
- ✔ The settings appear on the display.

8.4 Interrupting the operation

You can interrupt the operation and then continue again.

1. To interrupt the operation, press start stop.
2. Press start stop again to resume the operation.

8.5 Setting the operating mode

After you have switched on the appliance, the menu appears on the display.

1. To scroll through the various selection options, swipe to the left or right on the display.
   - Swipe right or left to scroll through the menu and other setting options.
   - Swipe down or up to scroll through selection lists.
2. To select a function, press the function on the display.
   - ✔ Depending on the function, possible setting values or other tiles are available for selection.
3. To go back to a setting if necessary, press ⮌.
4. To change the setting values, use the digital setting ring:
   - Swipe over the setting ring clockwise or anti-clockwise, as required.
   - Or press a specific position on the setting ring.
5. Use ✓ to confirm the setting.
6. Press start stop to start the operation.
7. If the operation is ended:
   - If required, you can select other settings and restart the operation.
   - When the food is ready, use ⏻ to switch the appliance off.

Note: You can save your settings as "Favourites" ☆ and use these again.
→ *"Favourites", Page 15*

8.6 Setting the type of heating and the temperature

1. Press "Types of heating" in the menu.
2. Press the type of heating that you want to use.
3. Press the temperature in °C or, depending on the type of heating, the setting.
4. Use the setting ring to set the temperature.
5. Press ✓ on the display to confirm the set temperature.
   If required, you can implement additional settings:
   - → *"Rapid heating", Page 12*
   - → *"Time-setting options", Page 12*
6. Press start stop to start the operation.
   - ✔ The appliance starts heating.
   - ✔ The setting values and how long the appliance has already been in operation are shown on the display.
7. If the operation is ended:
   - If required, you can select other settings and restart the operation.
   - When the food is ready, use ⏻ to switch the appliance off.

Note: The most suitable type of heating for your food can be found in the description of the type of heating.
→ *"Types of heating", Page 7*

Changing the type of heating

When you change the type of heating, the other settings are also reset.

1. Press start stop.
2. Press ⮌.
3. Press the type of heating that you want to use.
4. Reset the operation and use start stop to start.

Changing the temperature

Once the operation has started, you can change the temperature at any time.

1. Press ⌃ on the display.
2. Press the temperature.
3. Change the temperature with the setting ring.
4. To confirm the change, press ✓ on the display.
   - ✔ The change is applied.

8.7 Displaying information

In most cases, you can call up information about the function that you have just started. The appliance automatically displays certain information, e.g. to ask you to do/confirm something or to issue a warning.

1. Press ⓘ "Info".
   - ✔ Information is displayed for a few seconds.
2. To scroll through lots of content in the message, swipe over the display.
3. If necessary, use ⮌ to exit the message.

8.8 Sabbath-compliant use

If you want to operate your appliance so that it is Sabbath-compliant, use the time-setting options and change the basic setting for the lighting.

Note: If you open the appliance door during operation, the appliance stops heating. When you close the appliance door, the appliance continues to heat again. To operate your appliance so that it is Sabbath-compliant, do not open the appliance door until after operation.

1. Change the "Lighting" basic setting to "Always off".
   → *"Basic settings", Page 15*
   This will ensure that the light in the cooking compartment is always off while the appliance is in operation and when you open the appliance door.

2. Set the required operating mode.
   → *"Setting the operating mode", Page 11*
   → *"Setting the type of heating and the temperature", Page 11*
3. Set the required cooking time depending on the operating mode.
   → *"Setting the cooking time", Page 12*
   → *"Time-setting options", Page 12*
4. Use "End time" to set the time at which the operation should end.
   → *"Setting the end time", Page 13*
   → *"Time-setting options", Page 12*
5. Place the food in the cooking compartment before the appliance starts to heat.
6. Press start stop to start the operation.
   ✔ The display shows the time remaining until the operation starts. The appliance is in standby mode.
   ✔ Once the start time has been reached, the appliance starts heating and the cooking time starts counting down.
7. When the operation has ended, remove the food from the cooking compartment. The appliance automatically switches off completely after approximately 15 to 20 minutes.

   Note: If necessary, change the basic setting for the lighting again.

9 Rapid heating

To save time, rapid heating can shorten the preheating time for set temperatures over 100 °C.
Rapid heating is possible for the following types of heating:

- 3D hot air
- Top/bottom heating

9.1 Setting rapid heating

To ensure an even cooking result, do not place the food in the cooking compartment until rapid heating has come to an end.

Note: Do not set a cooking time until rapid heating has come to an end.

1. Set a suitable type of heating and a temperature of at least 100 °C.
   Rapid heating automatically switches off at temperatures of 200 °C and above.
2. Press "Rapid heating".
   ✔ The symbol lights up red.
3. Press start stop to start the operation.
   ✔ Rapid heating starts.
   ✔ Once rapid heating has ended, a signal sounds. The symbol changes back to white.
4. Place the food in the cooking compartment.

Cancelling rapid heating

1. Press ∧ on the display.
2. Press "Rapid heating".
   ✔ The symbol changes back to white.

10 Time-setting options

For an operation, you can set the cooking time and the time at which the operation should be finished. The timer runs independently of the operation.

Time-setting option	Use
Cooking time	If you set a cooking time, the appliance stops heating automatically once this time has elapsed.
End time	Along with the cooking time, you can set the time at which you want the operation to end. The appliance starts up automatically so that the operation finishes at the required time.
Timer	You can set the timer to run independently of the appliance during operation. It does not affect the appliance.

10.1 Setting the cooking time

You can set the cooking time for the operation up to 24 hours.

Requirement: An operating mode and temperature or level have been set.

1. Press "Cooking time".
2. To set the cooking time, press the relevant time value, e.g. hour display "h" or minute display "m".
   ✔ The selected value is marked in blue.
3. Use the setting ring to set the cooking time.
   If required, use to reset the setting value.
4. To confirm the set cooking time, press ✓ on the display.
5. Press start stop to start the operation.
   ✔ The appliance starts to heat and the time counts down.
   ✔ When the time has elapsed, a signal sounds. A message appears on the display confirming that the operation has finished.
6. Once the cooking time has elapsed:
   – If required, you can select other settings and restart the operation.
   – When the food is ready, use to switch the appliance off.

Changing the cooking time

You can change the cooking time at any time.

1. Press ∧ on the display.
2. Press the cooking time .
3. Use the setting ring to change the cooking time.
4. To confirm the change, press ✓ on the display.
   ✔ The change is applied.

Cancelling the cooking time

You can cancel the cooking time at any time.

1. Press ⌃ on the display.
2. Press the cooking time ⏲.
3. Reset the cooking time using ↺.

   Note: For operating modes that always require a cooking time, the appliance resets the cooking time to the preset value.
4. To confirm the change, press ✓ on the display.
✔ The change is applied.

10.2 Setting the end time

You can delay the time at which the cooking time for the operation is due to end by up to 24 hours.

Notes

- To achieve good cooking results, do not delay the time once the operation has already started.
- Food will spoil if you leave it in the cooking compartment for too long.

Requirements

- An operating mode and temperature or level have been set.
- A cooking time is set.

1. Press ⏲ "End time".
2. To set the time, press the hour display or the minute display.
✔ The selected value is marked in blue.
3. Use the setting ring to delay the time.
   If required, use ↺ to reset the setting value.
4. To confirm the set time, press ✓ on the display.
5. Press start stop to start the operation.
✔ The display shows the time remaining until the operation starts. The appliance is in standby mode.
✔ Once the start time has been reached, the appliance starts heating and the cooking time starts counting down.
✔ When the time has elapsed, a signal sounds. A notification appears on the display confirming that the operation has finished.
6. Once the cooking time has elapsed:
   – If required, you can select other settings and restart the operation.
   – When the food is ready, use ⏻ to switch the appliance off.

Changing the end time

To achieve good cooking results, only change the set time before the operation starts and before the cooking time starts counting down.

1. Press ⌃ on the display.
2. Press the end time ⏲.
3. Use the setting ring to change the end time.
4. To confirm the change, press ✓ on the display.
✔ The change is applied.

Cancelling the end time

You can delete the set end time at any time.

1. Press ⌃ on the display.
2. Press the end time ⏲.
3. Use ↺ to reset the end time.

   Note: For operating modes that always require a cooking time, the appliance resets the time at which the cooking time ends to the next possible time.
4. To confirm the change, press ✓ on the display.
✔ The change is applied.

10.3 Setting the timer

The timer runs independently during the operation. You can set the timer for up to 24 hours. The timer has its own signal so that you can tell whether it is the timer or a cooking time that has elapsed.

1. Press ⌛.
2. To set the timer, press the relevant time value on the display, e.g. minute display "m" or second display "s".
✔ The selected value is marked in blue.
3. Set the timer using the setting ring.
   If required, use ↺ to reset the setting value.
4. To start the timer, press ▷ on the display.
✔ The timer counts down.
✔ The timer remains visible on the display if the appliance is switched off.
✔ When the appliance is switched on, the display shows the settings for the current operation. The timer is displayed in the status display.
✔ Once the timer has elapsed, a signal sounds. A notification appears on the display confirming that the timer has finished.

Changing the timer

You can change the timer at any time.

1. If the timer is running in the background, use ⌛ to select the timer beforehand.
2. Press ||.
3. Change the timer using the setting ring.
4. Press ▷ to confirm.

Cancelling the timer

You can cancel the timer at any time.

1. If the timer is running in the background, use ⌛ to select the timer beforehand.
2. Press ||.
3. Reset the timer using ↺.
4. Press ▷ to confirm.

11 Dishes

The "Dishes" operating mode helps you to use your appliance to prepare different meals by selecting the optimum settings automatically.

11.1 Cookware for dishes

The cooking result depends on the composition of the meat and the size of cookware.
You should therefore use heat-resistant cookware that is suitable for temperatures up to 300 °C. Glass or glass ceramic cookware is best. The joint should cover approx. 2/3 of the cookware base.
Cookware made from the following material is not suitable:
- Bright, shiny aluminium
- Unglazed clay
- Plastic or plastic handles

11.2 Setting options for the dishes

To cook the dishes perfectly, the appliance uses different settings depending on the dish.
The display shows you the settings that are used. You can adjust certain settings. Follow the instructions on the display.

Note: The cooking result depends on the quality and composition of the food. Use fresh and, ideally, chilled food. Use frozen food straight from the freezer.

Tips and information about the settings
If you set a dish, the display shows relevant information for this dish, e.g.:
- Suitable shelf position
- Suitable accessory or cookware
- Added liquid
- Time for turning or stirring
  When this time is reached, a signal sounds.

To call up the information, press ⓘ "Info". Some messages are displayed automatically.

Programmes

The optimum type of heating, temperature and cooking time are preset for programmes.
To achieve an optimal cooking result, you must also set the weight, thickness or the cooking level. You can set the weight only in the intended range.
Unless otherwise indicated, set the total weight for your dish.

11.3 Overview of the dishes

You can find out which individual dishes are available to you on the appliance when you call up the operating mode. The selection of dishes depends on the features of your appliance.

Note: In the basic settings, you can regionally specialise the displayed dishes.
→ *"Basic settings", Page 15*

Dishes
- Pavlova
- Muffins
- Scones
- Part-cooked bread rolls or baguette
- Bake, savoury, fresh, cooked ingredients
- Potato gratin, raw ingredients, 4 cm deep
- Lasagne, fresh
- Fruit crumble
- Chicken, halved
- Chicken pieces
- Duck, unstuffed
- Goose legs
- Small turkey, unstuffed
- Turkey breast
- Turkey, crown - British style
- Boned pork neck joint
- Joint of pork with crackling, e.g. shoulder
- Pork tenderloin steak
- Pork Loin joint - British style
- Pork Roast joint - British style
- Pork Belly - British style
- Sirloin, rare
- Sirloin, medium
- Pot-roasted beef
- Beef Slow roast joint - British style
- Beef Top side, top rump - British style
- Joint of veal, marbled
- Joint of veal, lean
- Leg of lamb on the bone, well done
- Boned leg of lamb, medium
- Lamb Shoulder, boned and rolled - British style
- Meat loaf made from fresh mince
- Veal Ossobuco
- Meat stew
- Roast fish, whole
- Pizza, frozen, with deep-pan base, x 1
- Pizza, frozen, with thin base, x 1
- Chips, frozen
- Baked potatoes, whole
- Stew with vegetables

11.4 Setting a dish

1. Press "Dishes" in the menu.
2. Press the required dish.
✔ The settings for the dish appear on the display.
3. Adjust the settings if required.
   You can adjust only certain settings depending on the dish.
   → *"Setting options for the dishes", Page 14*
4. For information about the accessory and shelf position, for example, press ⓘ"Info".
5. Press start stop to start the operation.
✔ The appliance starts to heat and the time counts down.
✔ Once the dish is ready, a signal sounds. The appliance stops heating.
6. Once the cooking time has elapsed:
   – If required, you can select other settings and restart the operation.
   – When the food is ready, use ⏻ to switch the appliance off.

11.5 Automatic switch-off function

The automatic switch-off function (Auto Off) for the dishes allows you to bake and fry without any stress.

When the operation has finished, the appliance automatically stops heating.
To achieve an optimum cooking result, remove your dish from the cooking compartment once the operation has finished.

12 Favourites

In the "Favourites", you can save your settings and use these again.

Note: Depending on the appliance type/software status, you must first download this function to your appliance. You can find more information in the Home Connect app.

12.1 Saving favourites

You can save up to 10 different operating modes as your favourites.

- To save an operating mode as a favourite, you must use the Home Connect app. When your appliance is connected, follow the instructions in the app.

12.2 Selecting favourites

If you have saved favourites, you can use these to set the operation.

1. Press "Favourites" in the menu.
2. Press the required favourites.
3. If required, you can change the settings.
4. Press start stop to start the operation.

✔ The setting values are shown on the display.

Note:
Observe the instructions for the various operating modes:

12.3 Changing favourites

You can change, sort or delete your saved favourites at any time.

- To change the favourites, you must use the Home Connect app. When your appliance is connected, follow the instructions in the app.

13 Childproof lock

You can secure your appliance to prevent children from accidentally switching it on or changing the settings.

13.1 Activating the childproof lock

The childproof lock can be activated regardless of whether the appliance is on or off.

- Press and hold ⚿ for approx. 4 seconds to activate the childproof lock.

✔ A confirmation message appears on the display.
✔ The control panel is locked. The appliance can only be switched off using ⏻.
✔ When the appliance is switched on, ⚿ lights up. When the appliance is switched off, ⚿ does not light up.

13.2 Deactivating the childproof lock

You can deactivate the childproof lock at any time.

1. Press anywhere on the display.
2. To deactivate the childproof lock:
   - Follow the instructions on the display so that the graphic on the ring fills up completely.
   - Alternatively, press and hold ⚿ for approximately 4 seconds.

✔ A confirmation message appears on the display.

14 Basic settings

You can configure the basic settings for your appliance to meet your needs.

14.1 Overview of the basic settings

Here you can find an overview of the basic settings and factory settings. The basic settings depend on the features of your appliance.
You can find more information about the individual basic settings on the display using ⓘ "Info".

Basic settings	Selection
Language	See selection on the appliance.
Home Connect	Connect the oven to a mobile device and remotely control it. → *"Home Connect ", Page 17*
Time	Time in 24-hour format.

Display	Selection
Brightness	■ Levels 1, 2, 3, 4 and 5[1]

[1] Factory setting (may vary according to model)

Display	Selection
Standby screen	■ On for a limited time ■ On (this setting increases energy consumption) ■ Off[1]
Clock	■ Digital[1] ■ Analogue
Alignment	■ Align the display horizontally and vertically.

[1] Factory setting (may vary according to model)

Tone	Selection
Button tone	■ On[1] ■ Off
Signal tone	■ Very short duration (once) ■ Short duration (approx. 5 seconds) ■ Medium duration (approx. 10 seconds)[1] ■ Long duration (approx. 30 seconds)

[1] Factory setting (may vary according to model)

Appliance settings	Selection
Fan run-on time	■ Minimum ■ Recommended[1] ■ Long ■ Very long
Pull-out system	■ Not retrofitted (if shelf supports and a single set of pull-out rails are fitted)[1] ■ Retrofitted (if 2 or 3 sets of pull-out rails are fitted)
Pull-out system	■ Not retrofitted (if shelf supports and a single set of pull-out rails are fitted)[1] ■ Retrofitted (if 2 or 3 sets of pull-out rails are fitted)
Lighting	■ When cooking and when the door is opened[1] ■ Only when the door is opened ■ Always off

[1] Factory setting (may vary according to model)

Personalisation	Selection
Brand logo	■ Display[1] ■ Do not display
Operation after switch-on	■ Main menu[1] ■ Types of heating ■ Dishes ■ Favourites

[1] Factory setting (may vary according to model)

Personalisation	Selection
Elapsed cooking time	■ Do not display ■ Display[1]
Regional dishes	■ All[1] ■ European dishes ■ British dishes
Dishes	■ All[1] ■ No pork ■ Kosher only
Childproof lock	■ Button lock only[1] ■ Deactivated
Automatic rapid heating	■ off ■ On[1]

[1] Factory setting (may vary according to model)

Factory settings	Selection
Factory settings	■ Restore

Info	Display
Appliance information	Display technical information about the appliance.

14.2 Changing the basic settings

1. Press "Basic settings" in the menu.
2. Press the required basic settings area.
3. Press the required basic setting.
4. Press to select the required basic setting.
✔ The change is applied directly for most basic settings.
5. To change additional basic settings, use ⮌ to go back and select a different basic setting.
6. To exit the basic settings, use ⌂ to go back to the main menu or switch off the appliance using ⏻.
✔ The changes are saved.

Note: Your changes to the basic settings will be retained even after a power failure.

14.3 Setting the time

1. Press "Basic settings" in the menu.
2. Press "Time".
3. To set the time, press the hour display or the minute display.
✔ The selected value is marked in blue.
4. Use the setting ring to set the time.
5. To exit the basic settings, use ⌂ to go back to the main menu or switch off the appliance using ⏻.
✔ The time is saved.

15 Home Connect

This appliance is network-capable. Connecting your appliance to a mobile device lets you control its functions via the Home Connect app, adjust its basic settings and monitor its operating status.
The Home Connect services are not available in every country. The availability of the Home Connect function depends on the availability of Home Connect services in your country. You can find information about this at: www.home-connect.com.
The Home Connect app guides you through the entire login process. Follow the instructions in the Home Connect app to configure the settings.

Tips

- Please consult the documents supplied by Home Connect.
- Please also follow the instructions in the Home Connect app.

Notes

- Please note the safety precautions in this instruction manual and make sure that they are also observed when operating the appliance via the Home Connect app.
  → *"Safety", Page 2*
- Operating the appliance on the appliance itself always takes priority. During this time it is not possible to operate the appliance using the Home Connect app.
- In networked standby mode, the appliance requires a maximum of 2 W.

15.1 Setting up Home Connect

Requirements

- The appliance is connected to the power supply and is switched on.
- You have a mobile device with a current version of the iOS or Android operating system, e.g. a smartphone.
- The mobile device and the appliance are within range of your home network's Wi-Fi signal.

1. Download the Home Connect app.

2. Open the Home Connect app and scan the following QR code.

3. Follow the instructions in the Home Connect app.

15.2 Home Connect settings

You can adjust the Home Connect settings and network settings in your appliance's basic settings.
Which settings the display shows will depend on whether Home Connect has been set up and whether the appliance is connected to your home network.

Basic setting	Possible settings	Explanation
Home Connect assistant	Start the assistant Disconnect	You can connect your appliance to the Home Connect app via the Home Connect assistant. **Note:** If you are using the Home Connect assistant for the first time, only the "Start assistant" setting is available.
Wi-Fi	On Off	You can use the Wi-Fi to switch off the network connection for your appliance. When you have connected successfully once, you can deactivate the Wi-Fi and not lose your detailed data. As soon as you activate Wi-Fi again, the appliance connects automatically. **Note:** In networked standby mode, the appliance requires a maximum of 2 W.
Remote control status	Monitoring Manual remote start Permanent remote start	During monitoring, you can only view the operating status of the appliance in the app. For manual remote start, you must activate the remote start each time before you can start the appliance via the app. If you open the appliance door within 15 minutes of activating remote start or of the operation ending, remote start is deactivated. For permanent remote start, you can start and operate the appliance remotely at any time. If you often operate the appliance remotely, it is helpful to set the remote start to "Permanent".

15.3 Operating the appliance with the Home Connect app

You can use the Home Connect app to set and start the appliance remotely.

⚠ **WARNING – Risk of fire!**
Combustible objects that are left in the cooking compartment may catch fire.
- Never store combustible objects in the cooking compartment.
- If smoke is emitted, the appliance must be switched off or the plug must be pulled out and the door must be held closed in order to stifle any flames.

Requirements
- The appliance is switched on.
- The appliance is connected to the home network and to the Home Connect app.
- In order to be able to set the appliance via the app, the manual or permanent remote start must be selected in the "Remote control status" basic setting.

1. To activate remote start, press ⌂.
2. Configure a setting in the Home Connect app and send it to the appliance.

   Notes
   - If you open the appliance door within 15 minutes of activating remote start or of the operation ending, the manual remote start is deactivated.
   - When you start the oven using the controls on the appliance itself, the remote start function is activated automatically. You can use the Home Connect app to adjust the settings or start a new programme.

15.4 Software update

Your appliance's software can be updated using the software update function, e.g. for the purposes of optimisation, troubleshooting or security updates.
To do this, you must be a registered Home Connect user, have installed the app on your mobile device and be connected to the Home Connect server.
As soon as a software update is available, you will be informed via the Home Connect app and will be able to start the software update via the app. Once the update has been successfully downloaded, you can start installing it via the Home Connect app if you are in your WLAN home network (Wi-Fi). The Home Connect app will inform you once installation is successful.

Notes
- You can continue to use your appliance as normal while updates are downloading. Depending on your personal settings in the app, software updates can also be set to download automatically.
- We recommend that you install security updates as soon as possible.
- Installation takes a few minutes. You cannot use your appliance during installation.

15.5 Remote diagnostics

Customer Service can use Remote Diagnostics to access your appliance if you contact them, have your appliance connected to the Home Connect server and if Remote Diagnostics is available in the country in which you are using the appliance.

Tip: For further information and details about the availability of Remote Diagnostics in your country, please visit the service/support section of your local website: www.home-connect.com.

15.6 Data protection

Please see the information on data protection.
The first time your appliance is registered on a home network connected to the Internet, your appliance will transmit the following types of data to the Home Connect server (initial registration):
- Unique appliance identification (consisting of appliance codes as well as the MAC address of the Wi-Fi communication module installed).
- Security certificate of the Wi-Fi communication module (to ensure a secure data connection).
- The current software and hardware version of your appliance.
- Status of any previous reset to factory settings.

This initial registration prepares the Home Connect functions for use and is only required when you want to use the Home Connect functions for the first time.

Note: Please note that the Home Connect functions can only be utilised with the Home Connect app. Information on data protection can be retrieved in the Home Connect app.

16 Cleaning and servicing

To keep your appliance working efficiently for a long time, it is important to clean and maintain it carefully.

16.1 Cleaning products

In order to avoid damaging the various oven surfaces on the appliance, do not use unsuitable cleaning products.

⚠ **WARNING – Risk of electric shock!**
An ingress of moisture can cause an electric shock.
- Do not use steam- or high-pressure cleaners to clean the appliance.

ATTENTION!
Unsuitable cleaning agents damage the surfaces of the appliance.
- Do not use harsh or abrasive cleaning products.
- Do not use cleaning products with a high alcohol content.
- Do not use hard scouring pads or cleaning sponges.
- Do not use any special cleaners for cleaning the appliance while it is hot.

Using oven cleaner in a hot cooking compartment damages the enamel.
- Never use oven cleaner in the cooking compartment when it is still warm.
- Remove all food remnants from the cooking compartment and the appliance door before you next heat up the appliance.

If different cleaning agents are mixed together, there may be a chemical reaction between these.
- Do not mix cleaning agents.
- Completely remove any cleaning agent residue.

Salt contained in new sponge cloths may damage surfaces.
- Wash new sponge cloths thoroughly before use.

Suitable cleaning agents

Only use cleaning agents that are suitable for the different surfaces on your appliance.

Follow the instructions on cleaning the appliance.
→ *"Cleaning the appliance", Page 20*

Appliance front

Surface	Suitable cleaning agents	Information
Stainless steel	■ Hot soapy water ■ Special stainless steel cleaning products suitable for hot surfaces	To prevent corrosion, remove any patches of limescale, grease, starch or albumin (e.g. egg white) from stainless steel surfaces immediately. Apply a thin layer of the stainless steel cleaning product.
Plastic or painted surfaces E.g. control panel	■ Hot soapy water	Do not use glass cleaner or a glass scraper. To avoid permanent stains, immediately remove any descaling agent that gets onto the surface.

Appliance door

Area	Suitable cleaning agents	Information
Door panels	■ Hot soapy water ■ Oven cleaners	Do not use a glass scraper or stainless steel wool. **Tip:** Remove the door panels in order to clean them thoroughly. → *"Appliance door", Page 22*
Door cover	■ Made of stainless steel: Stainless steel cleaner ■ Made from plastic: Hot soapy water	Do not use glass cleaner or a glass scraper. Do not use stainless steel care products. **Tip:** Remove the door cover for thorough cleaning. → *"Appliance door", Page 22*
Stainless steel interior door frame	■ Stainless steel cleaner	Discolouration can be removed using stainless steel cleaner. Do not use stainless steel care products.
Door handle	■ Hot soapy water	To avoid permanent stains, immediately remove any descaling agent that gets onto the surface.
Door seal	■ Hot soapy water	Do not remove or scrub.

Cooking compartment

Area	Suitable cleaning agents	Information
Enamel surfaces	■ Hot soapy water ■ Vinegar water ■ Oven cleaners	Soak any heavily soiled areas and use a brush or steel wool. Leave the appliance door open to dry the cooking compartment after cleaning it. **Notes** ■ Enamel burns at very high temperatures, causing minor discolouration. The functionality of your appliance is not affected by this. ■ The edges of thin trays cannot be completely enamelled and may be rough. This does not impair the corrosion protection. ■ Food residues leave a white coating on the enamel surfaces. The coating does not pose a health risk. The functionality of your appliance is not affected by this. You can remove residues with lemon juice.
Self-cleaning surfaces	-	Follow the instructions for self-cleaning surfaces. → *"Regenerating self-cleaning surfaces in the cooking compartment", Page 20*

Area	Suitable cleaning agents	Information
Glass cover for the oven light	■ Hot soapy water	Use oven cleaner to remove very heavy soiling.
Shelf supports	■ Hot soapy water	Soak any heavily soiled areas and use a brush or steel wool. **Note:** To clean thoroughly, detach the shelf supports. → *"Rails", Page 25*
Accessories	■ Hot soapy water ■ Oven cleaners	Soak any heavily soiled areas and use a brush or steel wool. Enamelled accessories are dishwasher-safe.

16.2 Cleaning the appliance

In order to avoid damaging the appliance, you must clean your appliance only as specified, and with suitable cleaning products.

⚠ **WARNING – Risk of burns!**

The appliance and its parts that can be touched become hot during use.

- ▸ Caution should be exercised here in order to avoid touching heating elements.
- ▸ Young children under 8 years of age must be kept away from the appliance.

⚠ **WARNING – Risk of fire!**

Loose food remnants, fat and meat juices may catch fire.

- ▸ Before using the appliance, remove the worst of the food residues and remnants from the cooking compartment, heating elements and accessories.

Requirement: Read the information on cleaning products.
→ *"Cleaning products", Page 18*

1. Clean the appliance using hot soapy water and a dish cloth.
   – For some surfaces, you can use alternative cleaning agents.
   → *"Suitable cleaning agents", Page 19*
2. Dry with a soft cloth.

Regenerating self-cleaning surfaces in the cooking compartment

The back panel in the cooking compartment is self-cleaning. The self-cleaning surfaces are coated with a porous, matt ceramic layer and have a rough surface. When the appliance is in operation, the self-cleaning surfaces absorb splashes from baking, roasting or grilling, and break them down. If the self-cleaning surfaces no longer clean themselves adequately during operation, heat up the cooking compartment specifically to the right temperature.

ATTENTION!

If you do not clean the self-cleaning surfaces regularly, they may become damaged.

- ▸ If dark stains are visible on the self-cleaning surfaces, heat up the cooking compartment.
- ▸ Do not use oven cleaner or abrasive cleaning aids. If oven cleaner accidentally comes into contact with the self-cleaning surfaces, dab it off immediately using water and a sponge cloth. Do not rub.

1. Remove accessories and cookware from the cooking compartment.
2. Detach the shelf supports and remove them from the cooking compartment.
   → *"Rails", Page 25*
3. Remove coarse dirt using soapy water and a soft cloth:
   – From the smooth enamel surfaces
   – From the inside of the appliance door
   – From the glass cover on the oven lamp
   This prevents stains that cannot be removed.
4. Remove any objects from the cooking compartment. The cooking compartment must be empty.
5. Set the 3D hot air type of heating.
6. Set the maximum temperature.
7. Start the operation.
8. Switch off the appliance after 1 hour.
9. Once the appliance has cooled down, wipe the cooking compartment with a damp cloth.

   Note: Marks may appear on the self-cleaning surfaces. Residues of sugar and egg white in the food are not removed and stick to the surfaces. Red stains are residues from salty food – they are not rust. The stains are not hazardous to health. These marks do not impair the cleaning ability of the self-cleaning surfaces.
10. Attach the shelf supports.
    → *"Rails", Page 25*

17 Cleaning aid

The cleaning aid is a quick alternative for occasionally cleaning the cooking compartment. The cleaning aid softens dirt by evaporating the soapy water. It is then easier to remove the dirt.

17.1 Setting the cleaning aid

⚠ WARNING – Risk of scalding!
If there is water in the cooking compartment when it is hot, this may create hot steam.
- Never pour water into the cooking compartment when the cooking compartment is hot.

Note: The oven light does not come on while the cleaning aid is running.

Requirement: The cooking compartment must have cooled down completely.

1. Remove any accessories from the cooking compartment.
2. **ATTENTION!**
   Distilled water in the cooking compartment leads to corrosion.
   - Do not use distilled water.

   Mix 0.4 litres water with a drop of washing-up liquid and pour into the centre of the cooking compartment floor.
3. Press "Cleaning" in the menu.
4. Press "Cleaning aid".
   The duration cannot be changed.
5. Press start stop.
   - ✔ A notification stating that you should carry out the necessary preparatory work for the cleaning aid appears on the display.
6. Confirm the message.
   - ✔ The cleaning aid starts and the duration counts down.
   - ✔ Once the cleaning aid has ended, a signal tone sounds. A message appears on the display confirming that the operation has finished.
7. Press ⏻ to switch the appliance off.
8. → *"Cleaning the cooking compartment after using the cleaning aid", Page 21*.

17.2 Cleaning the cooking compartment after using the cleaning aid

ATTENTION!
The prolonged presence of moisture in the cooking compartment leads to corrosion.
- After using the cleaning assistance, wipe the cooking compartment and allow it to dry completely.

1. Allow the appliance to cool down.
2. Wipe out the remaining water in the cooking compartment using an absorbent sponge cloth.
3. Clean the smooth enamel surfaces in the cooking compartment with a dish cloth or a soft brush. Remove stubborn food remnants using a stainless steel scouring pad.
4. Remove limescale with a cloth soaked in vinegar, and wipe this away with clean water.
5. Dry the cooking compartment with a soft cloth.
6. To dry the cooking compartment completely, leave the appliance door open for approx. 1 hour or use the drying function.
   → *"Setting the drying process", Page 21*

18 Drying

To prevent residual moisture, dry the cooking compartment after using the cleaning aid.

ATTENTION!
If there is water on the cooking compartment floor when operating the appliance at temperatures above 120 °C, this will damage the enamel.
- Do not use the appliance if there is water on the cooking compartment floor.
- Wipe away any water on the cooking compartment floor before operation.

18.1 Drying the cooking compartment

You can leave the cooking compartment to dry or use the drying function.

1. Allow the appliance to cool down.
2. Remove any dirt from the cooking compartment.
3. Wipe away any water in the cooking compartment.
4. Dry the cooking compartment.
   - To dry the cooking compartment, leave the appliance door open for 1 hour.
   - To use the drying function, set "Drying function".
     → *"Setting the drying process", Page 21*

Setting the drying process

Requirement: → *"Drying the cooking compartment", Page 21*

1. Press "Cleaning" in the menu.
2. Press "Drying function".
   The duration cannot be changed.
3. Press start stop.
   - ✔ A notification stating that you should carry out the necessary preparatory work for the drying appears on the display.
4. Confirm the message.
   - ✔ The drying process starts and the duration counts down.
   - ✔ Once the drying has ended, a signal tone sounds. A message appears on the display confirming that the operation has finished.
5. Press ⏻ to switch the appliance off.
6. To dry the cooking compartment completely, leave the appliance door open for 1 to 2 minutes.

19 Appliance door

To clean the appliance door thoroughly, you can disassemble the appliance door.

19.1 Detaching the appliance door

⚠ **WARNING – Risk of injury!**
Components inside the appliance door may have sharp edges.
- Wear protective gloves.

The hinges on the appliance door move when the door is opened and closed, which could trap your fingers.
- Keep your hands away from the hinges.

1. Open the appliance door fully.
2. ⚠ **WARNING – Risk of injury!**
   When the hinges are not secured, they can snap shut with great force.
   - Make sure that the locking levers are always either fully closed or (when detaching the oven door) fully open.

   Open the locking levers on the left- and right-hand hinges.

Locking levers opened	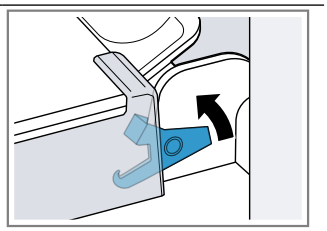 The hinge is now secured and cannot snap shut.
Locking levers closed	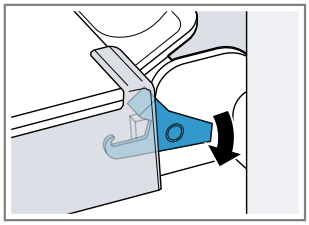 The appliance door is secured and cannot be detached.

✔ The locking levers are open. The hinges are now secured and cannot snap shut.

3. Close the appliance door fully ①. Grab hold of the appliance door with both hands (on the left and right) and pull it upwards and out ②.

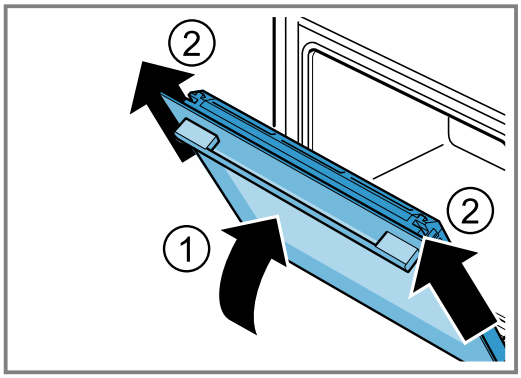

4. Carefully place the appliance door on a level surface.

19.2 Attaching the appliance door

⚠ **WARNING – Risk of injury!**
The hinges on the appliance door move when the door is opened and closed, which could trap your fingers.
- Keep your hands away from the hinges.

When the hinges are not secured, they can snap shut with great force.
- Make sure that the locking levers are always either fully closed or (when detaching the oven door) fully open.

1. Slide the appliance door straight onto the two hinges ①. Slide the appliance door on as far as it will go.
2. Open the appliance door fully.
3. Close the locking levers on the left- and right-hand hinges ②.

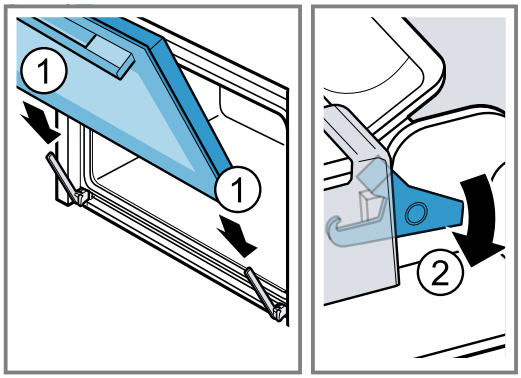

✔ The locking levers are closed. The appliance door is secured and cannot be detached.

4. Close the appliance door.

19.3 Removing the door panes

⚠ **WARNING – Risk of injury!**
The hinges on the appliance door move when the door is opened and closed, which could trap your fingers.
- Keep your hands away from the hinges.

Components inside the appliance door may have sharp edges.
- Wear protective gloves.

1. Open the appliance door fully.
2. Open the locking levers on the left- and right-hand hinges ①.
✔ The locking levers are open. The hinges are now secured and cannot snap shut.
3. Close the appliance door fully ②.

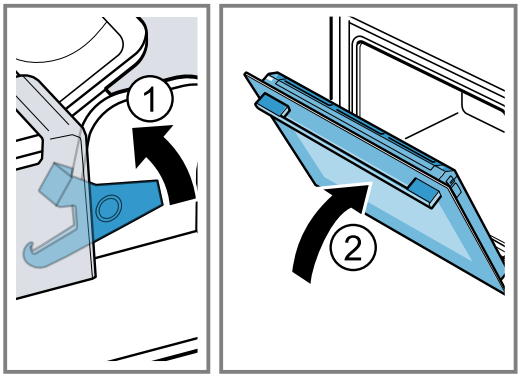

4. Push on the left- and right-hand side of the door cover from the outside ① until it is released.
5. Remove the door cover ②.

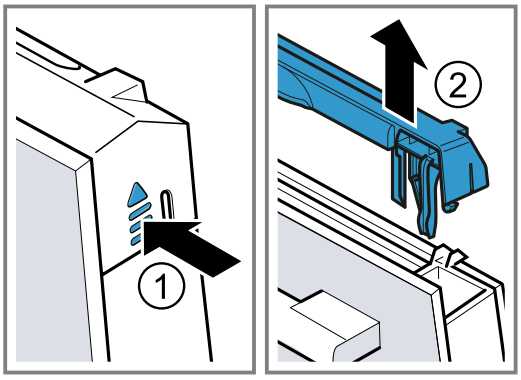

6. Lift out the inner pane ① and set it down carefully on a flat surface.
7. Lift out the intermediate pane ② and set it down carefully on a flat surface.

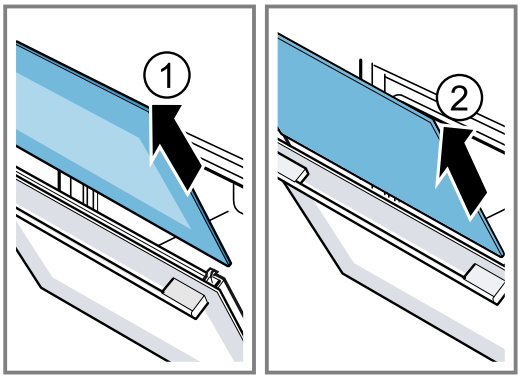

8. Open the appliance door and remove the door seal.

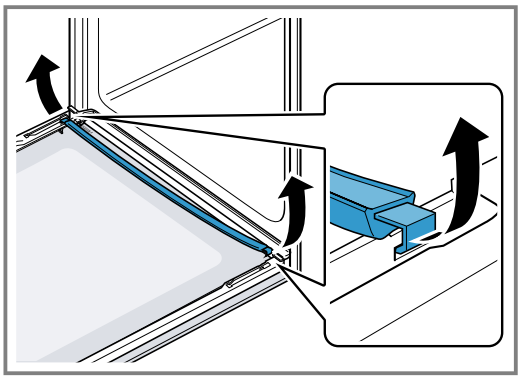

9. If necessary, you can remove the condensate trough for cleaning.
   – Open the appliance door.
   – Tilt the condensate trough upwards and remove it.

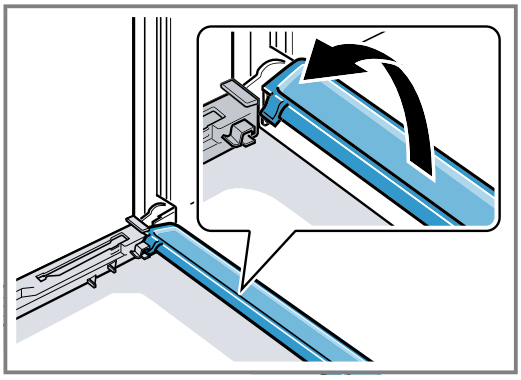

10. ⚠ **WARNING – Risk of injury!**
    Scratched glass in the appliance door may develop into a crack.
    ▸ Do not use any harsh or abrasive cleaners or sharp metal scrapers to clean the glass on the oven door, as they may scratch the surface.

    Clean the removed door panels on both sides with glass cleaner and a soft cloth.
11. Clean the condensate trough with a cloth and hot soapy water.
12. Clean the appliance door.
    → *"Suitable cleaning agents", Page 19*
13. Dry the door panels and refit them.
    → *"Fitting the door panes", Page 23*

19.4 Fitting the door panes

⚠ **WARNING – Risk of injury!**
The hinges on the appliance door move when the door is opened and closed, which could trap your fingers.
▸ Keep your hands away from the hinges.
Components inside the appliance door may have sharp edges.
▸ Wear protective gloves.

1. Open the appliance door fully.

2. Place the condensate trough vertically into the retainer [a] and turn it downwards.

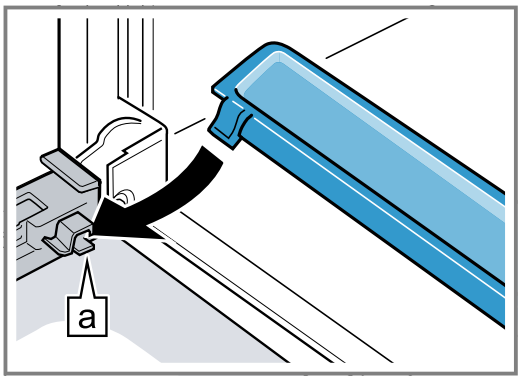

3. Slide the intermediate pane into the left- and right-hand retainers [a].

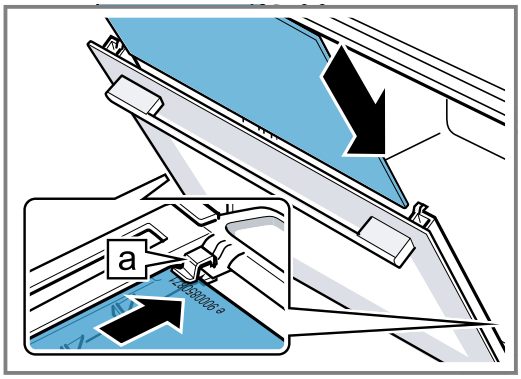

4. Push the intermediate pane upwards until it is in the left- and right-hand retainers [a].

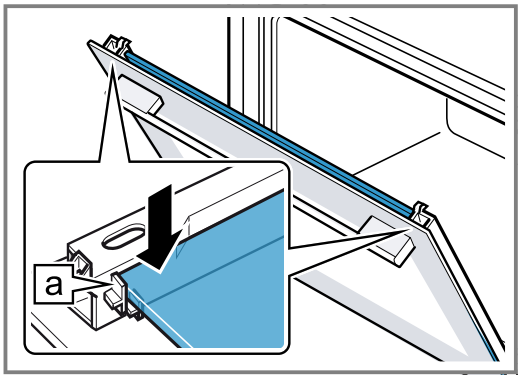

5. Open the appliance door and attach the door seal.

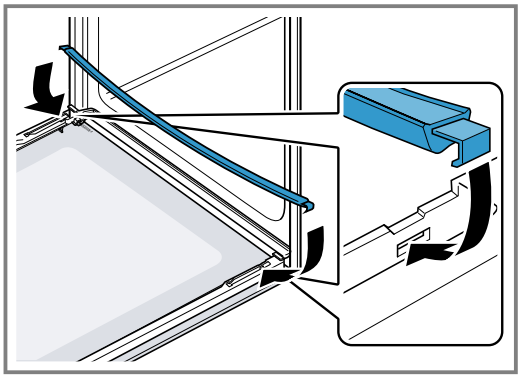

6. **Note:** When sliding the pane in, ensure that the glossy side of the pane is on the outside and the cut-outs on the left and right are at the top.

   Slide the inner pane into the left- and right-hand retainers [a].

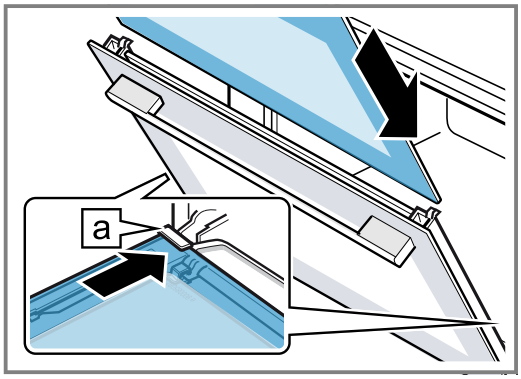

7. Push the inner pane upwards until it is in the left- and right-hand retainers [a].

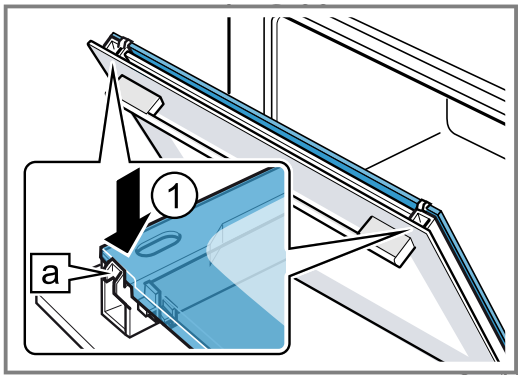

8. Put the door cover into position ① and push down on it until you hear it click into place.
9. Open the appliance door fully.
10. Close the locking levers on the left- and right-hand hinges ②.

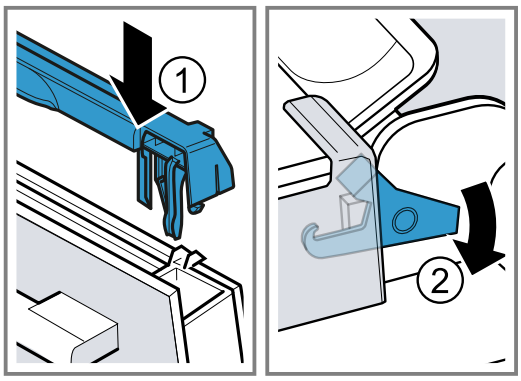

✔ The locking levers are closed. The appliance door is secured and cannot be detached.

11. Close the appliance door.

Note: Do not use the cooking compartment again until the door panes have been correctly fitted.

20 Rails

To thoroughly clean the rails and the cooking compartment, or to replace the rails, you can remove the rails.

20.1 Detaching the rails

⚠ **WARNING – Risk of burns!**
The shelf supports get very hot
- ▸ Never touch the shelf supports when hot.
- ▸ Always allow the appliance to cool down.
- ▸ Keep children at a safe distance.

1. Lift the rail forwards slightly ① and detach it ②.
2. Pull the whole rail to the front ③ and remove it.

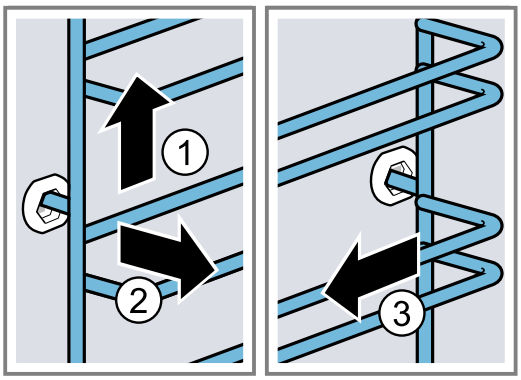

3. Clean the rail.
→ *"Cleaning products", Page 18*

20.2 Attaching the rails

Notes
- The rails only fit on the right or left.
- For both rails, ensure that the curved rods are at the front.

1. First, push the rail into the middle of the rear socket ① until the rail rests against the cooking compartment wall, and then push this back ②.
2. Push the rail into the front socket ③ until the rail also rests against the cooking compartment wall, and then press this downwards ④.

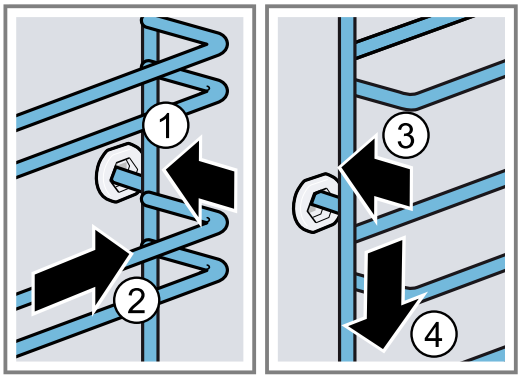

21 Troubleshooting

You can rectify minor faults on your appliance yourself. Read the troubleshooting information before contacting after-sales service. This will avoid unnecessary costs.

⚠ **WARNING – Risk of injury!**
Improper repairs are dangerous.
- ▸ Repairs to the appliance should only be carried out by trained specialist staff.
- ▸ If the appliance is defective, call Customer Service.

⚠ **WARNING – Risk of electric shock!**
Incorrect repairs are dangerous.
- ▸ Repairs to the appliance should only be carried out by trained specialist staff.
- ▸ Only use genuine spare parts when repairing the appliance.
- ▸ If the power cord of this appliance is damaged, it must be replaced by trained specialist staff.

21.1 Malfunctions

Fault	Cause and troubleshooting
The appliance is not working.	The circuit breaker in the fuse box has tripped. ▸ Check the circuit breaker in the fuse box.
	There has been a power cut. ▸ Check whether the lighting in your kitchen or other appliances are working.
	Electronics fault 1. Disconnect the appliance from the power supply for at least 30 seconds by switching off the fuse. 2. Reset the basic settings to the factory settings. → *"Basic settings", Page 15*
"Sprache Deutsch" appears in the display.	There has been a power cut. ▸ Configure the initial configuration settings. → *"Performing initial start-up", Page 10*

Fault	Cause and troubleshooting
The operation does not start or is interrupted.	Different causes are possible. ▸ Check the notifications that appear on the display. → *"Displaying information", Page 11*
	Malfunction ▸ Call the after-sales service. → *"Customer Service", Page 27*
Appliance does not heat up.	Demo mode is switched on. **1.** Briefly disconnect the appliance from the power supply by switching the circuit breaker in the fuse box off and then on again. **2.** Switch off demo mode in the basic settings within approx. 5 minutes. → *"Changing the basic settings", Page 16*
	There has been a power cut. ▸ Open and close the appliance door once after a power failure. ✔ The appliance is checked and is ready to use.
The time is not displayed when the appliance is switched off.	Basic setting has been changed. ▸ Change the basic setting for the time display. → *"Basic settings", Page 15*
Home Connect is not working properly.	Different causes are possible. ▸ Go to www.home-connect.com.
The interior lighting does not work.	Basic setting has been changed. ▸ Change the basic setting for the lighting. → *"Basic settings", Page 15*
	The halogen lamp is defective. ▸ Change the oven light bulb. → *"Replacing the oven light bulb", Page 26*
Maximum operating time reached.	To prevent an unwanted permanent operation, the appliance automatically stops heating after several hours if the settings are unchanged. A message appears in the display. The point at which the maximum operating time is reached is determined by the corresponding settings for an operating mode. **1.** To continue operation, switch the appliance off and on again using ⏻. Reset and start the operation. **2.** If you do not need to use the appliance, press ⏻ to switch it off. **Tip:** To prevent the appliance from switching off when you do not want it to, set a cooking time.
Error code made up of letters and numbers appears on the display, e.g. E0111.	The electronics have detected a fault. **1.** Switch the appliance off and on again. ✔ If the fault was a one-off, the message disappears. **2.** If the message appears again, call the after-sales service. Please specify the exact error message when calling. → *"Customer Service", Page 27*
The cooking result is not satisfactory.	Settings were unsuitable. Adjustment values, e.g. temperature or cooking time, depend on the recipe, quantity and food. ▸ Next time, set lower or higher values. **Tip:** A lot of other information about the food preparation and corresponding adjustment values can be found in the Home Connect app or on our website www.bosch-home.com.

21.2 Replacing the oven light bulb

If the light in the cooking compartment fails, change the oven light bulb.

Note: Heat-resistant, 40-watt, 230 V halogen bulbs are available from the after-sales service or specialist retailers. Only use these bulbs. Hold the new halogen bulbs only with a clean, dry towel. This increases the service life of the bulb.

⚠ **WARNING – Risk of burns!**

The appliance and its parts that can be touched become hot during use.

- ▸ Caution should be exercised here in order to avoid touching heating elements.
- ▸ Young children under 8 years of age must be kept away from the appliance.

⚠ **WARNING – Risk of electric shock!**
When changing the bulb, the bulb socket contacts are live.
- Before replacing the bulb, ensure that the appliance is switched off in order to prevent a potential electric shock.
- Also unplug the appliance from the mains or switch off the circuit breaker in the fuse box.

⚠ **WARNING – Risk of injury!**
The glass cover may already have broken due to external influences or it may break due to excessive pressure when being installed or removed.
- Exercise caution when installing or removing the glass cover.
- Use gloves or a tea towel.

Requirements
- The appliance is disconnected from the power supply.
- The cooking compartment has cooled down.
- You must have a new halogen lamp to replace the old one.

1. Place a tea towel in the cooking compartment to prevent damage.
2. Turn the glass cover anti-clockwise to remove it ①.
3. Pull out the halogen bulb without turning it ②.

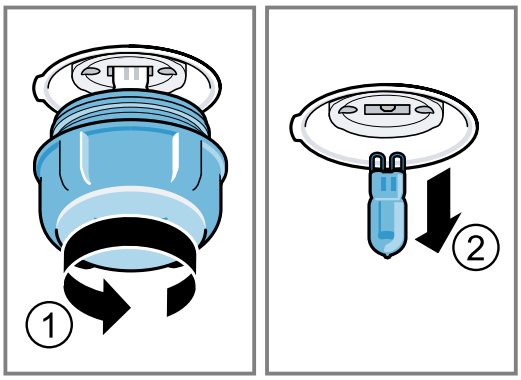

4. Insert the new halogen bulb and press it firmly into the socket.
   Make sure that the pins are positioned correctly.
5. Depending on the appliance model, the glass cover may have a sealing ring. Attach the sealing ring.
6. Screw in the glass cover.
7. Remove the tea towel from the cooking compartment.
8. Connect the appliance to the power supply.

22 Disposal

22.1 Disposing of old appliance

Valuable raw materials can be reused by recycling.
1. Unplug the appliance from the mains.
2. Cut through the power cord.
3. Dispose of the appliance in an environmentally friendly manner.
   Information about current disposal methods are available from your specialist dealer or local authority.

This appliance is labelled in accordance with European Directive 2012/19/EU concerning used electrical and electronic appliances (waste electrical and electronic equipment - WEEE).
The guideline determines the framework for the return and recycling of used appliances as applicable throughout the EU.

23 Customer Service

Detailed information on the warranty period and terms of warranty in your country is available from our after-sales service, your retailer or on our website.
If you contact Customer Service, you will require the product number (E-Nr.), the production number (FD) and the consecutive numbering (Z-Nr.) of your appliance.
The contact details for Customer Service can be found in the enclosed Customer Service directory or on our website.
This product contains light sources from energy efficiency class G.

23.1 Product number (E-Nr.), production number (FD) and consecutive numbering (Z-Nr.)

You can find the product number (E-Nr.), the production number (FD) and the consecutive numbering (Z-Nr.) on the appliance's rating plate.
You will see the rating plate with these numbers if you open the appliance door.

Make a note of your appliance's details and the Customer Service telephone number to find them again quickly.
You can also display the appliance information in the basic settings.
→ *"Basic settings", Page 15*

24 Information regarding Free and Open Source Software

This product includes software components that are licensed by the copyright holders as free or open source software.
The applicable licence information is stored on your home appliance. You can also access the applicable licence information via your Home Connect app: "Profile -> Legal information -> Licence Information".[1] You can download the licence information on the brand product website. (Please search on the product website for your appliance model and additional documents). Alternatively, you can request the relevant information from ossrequest@bshg.com or BSH Hausgeräte GmbH, Carl-Wery-Str. 34, 81739 Munich, Germany.

The source code will be made available to you on request.
Please send your request to ossrequest@bshg.com or BSH Hausgeräte GmbH, Carl-Wery-Str.34, 81739 Munich, Germany.
Subject: „OSSREQUEST“
The cost of performing your request will be charged to you. This offer is valid for three years from the date of purchase or at least as long as we offer support and spare parts for the relevant appliance.

25 Declaration of Conformity

BSH Hausgeräte GmbH hereby declares that the appliance with Home Connect functionality conforms to the essential requirements and other relevant provisions of Directive 2014/53/EU.
A detailed RED Declaration of Conformity can be found online at www.bosch-home.com among the additional documents on the product page for your appliance.

2.4 GHz band (2400–2483.5 MHz): Max. 100 mW

CE

	BE	BG	CZ	DK	DE	EE	IE	EL	ES
	FR	HR	IT	CY	LI	LV	LT	LU	HU
	MT	NL	AT	PL	PT	RO	SI	SK	FI
	SE	NO	CH	TR	IS	UK (NI)			
5 GHz WLAN (Wi-Fi): For indoor use only.									

AL	BA	MD	ME	MK	RS	UK	UA
5 GHz WLAN (Wi-Fi): For indoor use only.							

26 How it works

Here, you can find the ideal settings for various types of food as well as the best accessories and cookware. We have perfectly tailored these recommendations to your appliance.

Tip: A lot of other information about the food preparation and corresponding adjustment values can be found in the Home Connect app or on our website www.bosch-home.com.

26.1 General cooking tips

Take note of the following information when cooking all types of food.

- The temperature and cooking time depend on the amount of food and the recipe. Settings ranges are specified for this reason. Try using the lower values to start with.
- The setting values apply to food placed in the cooking compartment while the cooking compartment is still cold. If you want to preheat anyway, do not place accessories into the cooking compartment until it has finished preheating.
- Remove any accessories that are not being used from the cooking compartment.

26.2 Baking tips

- Dark-coloured metal baking tins are most suitable for baking cakes, bread and other baked goods.
- Use wide, shallow cookware for bakes and gratins. Food takes longer to cook in deep, narrow cookware and it browns more on top.
- If you are cooking bakes directly in the universal pan, place the universal pan into the cooking compartment at level 2.

[1] Depending on the appliance specifications

- The setting values for bread dough apply to both dough placed on a baking tray and dough placed in a loaf tin.

ATTENTION!
When the cooking compartment is hot, any water inside it will create steam. The change in temperature may cause damage.
- ▸ Never pour water into the cooking compartment when it is still hot.
- ▸ Never place cookware containing water on the cooking compartment floor.

Shelf positions

Baking on one level	Height
Tall baked items and tins/dishes on the wire rack	2
Shallow baked items/baking tray	3

Baking on two or more levels	Height
2 levels ■ Universal pan ■ Baking tray	 3 1
2 levels ■ Baking tins/dishes on 2 wire racks	 3 1
3 levels ■ Baking tray ■ Universal pan ■ Baking tray	 5 3 1

Use the 4D hot air heating function.
Note: Items that are placed in the appliance on baking trays or in baking tins/dishes at the same time will not necessarily be ready at the same time.

26.3 Roasting, braising and grilling tips

- The recommended settings are for fridge-temperature food and unstuffed, oven-ready poultry.
- Place the poultry onto the cookware breast-side or skin-side down.
- Turn roasting joints, grilled items or whole fish after approx. ½ to ⅔ of the specified time.

Roasting on the wire rack

Food roasted on the wire rack will become very crispy on all sides. You can roast large poultry, for example, or multiple individual pieces at the same time.
- Roast pieces of a similar weight and thickness. The grilled food will brown evenly and will remain succulent and juicy.
- Place the food to be roasted directly on the wire rack.
- To catch any liquids that drip down, place the universal pan, with the wire rack inside it, into the cooking compartment at the specified shelf height.
- Add up to ½ litre of water to the universal pan, depending on the size and type of food that you want to roast.
  You can make a sauce from the juices that are collected. This also means that less smoke is produced and the cooking compartment does not become as dirty.

Roasting in cookware

If you cover the cookware when you cook your food, this will keep the cooking compartment cleaner.

General information about roasting in cookware
- Use heat-resistant, ovenproof cookware.
- Place the cookware on the wire rack.
- Glass cookware is best.
- Follow the manufacturer's instructions for your roasting dishes.

Roasting in uncovered cookware
- Use a deep roasting dish.
- If you do not have any suitable cookware, you can use the universal pan.

Roasting in covered cookware
- Use a suitable lid that seals well.
- When roasting meat, there should be at least 3 cm between the food and the lid. The meat may expand.

⚠ **WARNING – Risk of scalding!**
Very hot steam may escape when the lid is opened after cooking. Steam may not be visible, depending on the temperature.
- ▸ Lift the lid in such a way that the hot steam can escape away from you.
- ▸ Keep children away from the appliance.

Grilling

Grill food if you want it to be crispy.
ATTENTION!
Acidic food may damage the grid
- ▸ Do not place acidic food, such as fruit or food with an acidic marinade directly on the pan support.

Information for those allergic to nickel
In rare cases, small amounts of nickel may pass into the food.
The "Grill" type of heating is good for cooking thinner pieces of poultry, meat and fish such as steaks, drumsticks and burgers. It is also excellent for toasting bread.
Circulated air grilling is very well suited to cooking whole poultry and fish, as well as meat, e.g. roast pork with crackling.
- When grilling several food items, choose pieces that are of a similar weight and thickness. The grilled food will brown evenly and will remain succulent and juicy.
- Place the food to be grilled directly onto the wire rack.
- To catch any liquids that drip down, place the universal pan into the cooking compartment at least one level below the wire rack.

Notes

- The grill element switches on and off continuously. This is normal. The grill setting that you use determines how frequently this occurs.
- Smoke may be produced when grilling.

26.4 Cooking instructions for ready meals

- The cooking result greatly depends on the quality of the food. Pre-browning and irregularities may already be present in the food before cooking.
- Do not use frozen products that are covered with a thick layer of ice. Remove any ice on the food.
- Take ready meals out of the packaging.
- If you are warming or cooking the ready meal in cookware, make sure that the cookware is heat-resistant.
- Distribute foods that are in the form of separate pieces, such as bread rolls and potato products, so that they are spread out flat and evenly on the accessory. Leave a little space between the individual pieces.
- Follow the manufacturer's instructions on the packaging.

26.5 List of foods

Recommended settings for a variety of foods, sorted into food categories.

Recommended settings for various types of food

Food	Accessory/cookware	Shelf position	Type of heating → *Page 7*	Temperature in °C/grill setting	Cooking time in mins
Sponge cake, delicate	Ring-shaped tin or Loaf tin	2		150-170	60-80
Sponge cake, 2 levels	Ring-shaped tin or Loaf tin	3+1		140-150	70-85
Fruit tart or cheesecake with shortcrust pastry base	Springform cake tin, diameter 26 cm	2		170-190	55-80
Sponge flan, 6 eggs	Springform cake tin Ø 28 cm	2		150-160 [1]	30-40
Shortcrust tart with moist topping	Universal pan	3		160-180	55-95
Yeast cake with moist topping	Universal pan	3		180-190	30-55
Swiss roll	Baking tray	3		180-190 [1]	10-15
Muffins	Muffin tray	2		170-190	20-40
Small yeast cakes	Baking tray	3		150-170	20-30
Biscuits	Baking tray	3		140-160	15-25
Biscuits, 2 levels	Universal pan + Baking tray	3+1		140-160	15-30
Biscuits, 3 levels	x 2 Baking tray + Universal pan	5+3+1		140-160	15-30
Bread, 750 g	Universal pan or Loaf tin	2		200-220	20-40
Bread, 1500 g	Universal pan or Loaf tin	2		200-220	40-60
Flatbread	Universal pan	3		240-250	20-25

[1] Preheat the appliance.
[2] Turn the dish between halfway and two-thirds through the cooking time.
[3] At the start, add liquid to the cookware so that at least 2/3 of the joint is covered in liquid
[4] Turn the dish 2/3 of the way through the cooking time.
[5] Pour water into the dish so that it covers the base.
[6] Do not turn the food.
[7] Slide the universal pan underneath the wire rack.

Food	Accessory/cookware	Shelf position	Type of heating → *Page 7*	Temperature in °C/grill setting	Cooking time in mins
Bread rolls, fresh	Baking tray	3		180-190	20-30
Pizza, fresh, on a baking tray	Baking tray	3		190-210	20-30
Pizza, fresh, on a baking tray, 2 levels	Universal pan + Baking tray	3+1		180-190	30-40
Pizza, fresh, thin-crust, on a pizza tray	Pizza tray	2		250-270 [1]	8-13
Quiche	Dark coated quiche tin	2		190-210	25-35
Tarte flambée	Universal pan	3		260-270 [1]	10-15
Bake, savoury, cooked ingredients	Ovenproof dish	2		200-220	30-60
Potato gratin, raw ingredients, 4 cm deep	Ovenproof dish	2		150-170	60-80
Chicken, 1.3 kg, unstuffed	Uncovered cookware	2		200-220	60-70
Small chicken portions, 250 g each	Uncovered cookware	3		220-230	30-35
Goose, unstuffed, 3 kg	Uncovered cookware	2		**1.** 140 **2.** 160	**1.** 130-140 **2.** 50-60
Joint of pork without rind, e.g. neck, 1.5 kg	Uncovered cookware	2		160-170	150-160
Fillet of beef, medium, 1 kg	Wire rack + Universal pan	3		210-220	40-50 [2]
Pot-roasted beef, 1.5 kg [3]	Covered cookware	2		200-220	130-150
Sirloin, medium, 1.5 kg	Wire rack + Universal pan	3		200-220	60-70 [2]
Burger, 3–4 cm thick	Wire rack	4		3	25-30 [4]
Leg of lamb, boned, medium, 1.5 kg [5]	Uncovered cookware	2		170-190	70-80 [6]
Fish, grilled, whole, 300 g, e.g. trout [7]	Wire rack	2		160-180	20-30

[1] Preheat the appliance.
[2] Turn the dish between halfway and two-thirds through the cooking time.
[3] At the start, add liquid to the cookware so that at least 2/3 of the joint is covered in liquid
[4] Turn the dish 2/3 of the way through the cooking time.
[5] Pour water into the dish so that it covers the base.
[6] Do not turn the food.
[7] Slide the universal pan underneath the wire rack.

Yoghurt

Use your appliance to make yoghurt.

Making yoghurt

1. Remove the accessories and shelves from the cooking compartment.
2. Heat 1 litre of whole milk (3.5% fat) to 90 °C on the hob and then leave it to cool down to 40 °C.
   It is sufficient to heat UHT milk to 40 °C.
3. Mix 150 g of chilled yoghurt into the milk.
4. Pour the mixture into small containers, e.g. cups or small jars.
5. Cover the containers with film, e.g. cling film.
6. Place the containers on the cooking compartment floor.
7. Use the recommended settings when configuring the appliance settings.
8. After making the yoghurt, leave it to cool in the refrigerator for at least 12 hours.

Recommended settings for desserts and compote

Food	Accessory/cookware	Shelf position	Type of heating → *Page 7*	Temperature in °C	Cooking time in mins
Yoghurt	Individual moulds	Cooking compartment floor	⊟	40-45	8–9 hrs

26.6 Special cooking methods and other applications

Information and recommended settings for special cooking methods and other applications, e.g. slow cooking.

Slow cooking

Cook prime cuts of meat slowly at a low temperature, e.g. tender cuts of beef, veal, lamb or poultry.

Slow cooking poultry or meat

Note: When using the slow cooking type of heating, you cannot delay the start of the programme by setting an end time.

Requirement: The cooking compartment is cold.

1. Use fresh, clean, hygienic meat without bones.
2. Place the cookware onto the wire rack at level 2 in the cooking compartment.
3. Preheat the cooking compartment and cookware for approx. 15 minutes.
4. Sear the meat on all sides on the hob at a very high heat.
5. Immediately place the meat into the pre-warmed cookware in the cooking compartment.
   To ensure that the temperature in the cooking compartment remains constant, keep the cooking compartment door closed during slow cooking.

Tips for slow cooking

Here you will find tips for achieving good results when slow cooking food.

Issue	Tip
You want to slow cook a duck breast.	▪ Place the cold duck breast into a pan. ▪ Sear the skin side first. ▪ Slow cook the duck breast. ▪ After slow cooking, grill the duck breast for 3 to 5 minutes until crispy.
You want to serve your slow-cooked meat as hot as possible.	▪ Preheat the serving plate. ▪ Make sure that the sauces that accompany the duck breast are very hot when you serve them.

Recommended settings for slow cooking

Food	Accessory/cookware	Shelf position	Searing time in mins	Type of heating → *Page 7*	Temperature in °C	Cooking time in mins
Duck breast, medium rare, 300 g each	Uncovered cookware	2	6-8	⊡	95 [1]	60-70
Fillet of pork, whole	Uncovered cookware	2	4-6	⊡	85 [1]	75-100
Fillet of beef, 1 kg	Uncovered cookware	2	6-8	⊡	85 [1]	90-150
Veal medallions, 4 cm thick	Uncovered cookware	2	4	⊡	80 [1]	50-70
Saddle of lamb, boned, 200 g each	Uncovered cookware	2	4	⊡	85 [1]	30-70

[1] Preheat the appliance.

Air Fry

Cook food with Air Fry until crispy and with little fat. Air Fry is particularly suitable for meals that are normally fried in oil.

Cooking tips for Air Fry

Observe this information when cooking food with Air Fry.

- Only one level can be used when cooking with Air Fry.
- The Air Fry accessory makes food crispier. If the Air-Fry accessory is not included with the appliance as standard, you can obtain the Air-Fry accessory as an optional accessory.
- Do not preheat the oven.
- Do not use greaseproof paper. The air must circulate in the cooking compartment.
- Do not defrost frozen food.
- Cover the Air-Fry accessory or the universal pan evenly with the food. If possible, only distribute the food on the accessory in a single layer.

- Insert the accessory into the cooking compartment at level 3. If you use the Air Fry accessory, you can insert an empty universal pan at level 1 to protect against dirt.
- Turn the food halfway through cooking. If you are cooking larger quantities, turn the food twice.

Tip: Do not season the food until after you have cooked it. This makes the food crispier.
Breaded vegetables are also suitable for cooking with Air Fry. To save fat, use a sprayer to spray the coating with oil. This forms a crispy crust with little fat.

Recommended settings for Air Fry

Food	Accessory/cookware	Shelf position	Type of heating → *Page 7*	Temperature in °C	Cooking time in mins
Chips	Universal pan	3		180-200	15-20
Potato pockets, filled	Universal pan	3		180-200	15-20
Potato rösti	Universal pan	3		180-200	15-20
Chicken goujons, nuggets, frozen	Universal pan	3		180-200	8-12
Fish fingers	Universal pan	3		180-200	10-20
Broccoli, breaded	Universal pan	3		180-200	10-20

26.7 Test dishes

The information in this section is provided for test institutes to facilitate testing of the appliance in accordance with EN 60350-1.

Baking

- The setting values apply to food that is placed into a cold cooking compartment.
- Take note of the information on preheating in the recommended settings tables. These setting values apply without rapid heat-up.
- For baking, use the lower of the temperatures indicated first.
- Items that are placed in the appliance on baking trays or in baking tins/dishes at the same time will not necessarily be ready at the same time.
- Shelf positions when baking on 2 levels:
  - Universal pan: Shelf position 3
    Baking tray: Shelf position 1
  - Baking tins on the wire rack:
    First wire rack: Shelf position 3
    Second wire rack: Shelf position 1
- Shelf positions when baking on 3 levels:
  - Baking tray: Shelf position 5
  - Universal pan: Shelf position 3
  - Baking tray: Shelf position 1
- Hot water sponge cake
  - When baking on 2 levels, place the springform tins each in the centre of the wire racks.
  - As an alternative to a pan support, you can also use the Air Fry baking tray offered by us.

Recommended settings for baking

Food	Accessory/cookware	Shelf position	Type of heating → *Page 7*	Temperature in °C	Cooking time in mins
Shortbread	Baking tray	3		140-150 [1]	25-35
Shortbread	Baking tray	3		140-150 [1]	20-30
Shortbread, 2 levels	Universal pan + Baking tray	3+1		140-150 [1]	25-35
Shortbread, 3 levels	x 2 Baking tray + Universal pan	5+3+1		130-140 [1]	35-55
Small cakes	Baking tray	3		150 [1]	25-35
Small cakes	Baking tray	3		150 [1]	20-30
Small cakes, 2 levels	Universal pan + Baking tray	3+1		140 [1]	25-35

[1] Preheat the appliance for five minutes. Do not use the rapid heating function.
[2] Preheat the appliance. Do not use the rapid heating function.

Food	Accessory/cookware	Shelf position	Type of heating → *Page 7*	Temperature in °C	Cooking time in mins
Small cakes, 3 levels	x 2 Baking tray + Universal pan	5+3+1		140 [1]	25-35
Hot water sponge cake	Springform cake tin, diameter 26 cm	2		160-170 [2]	25-35
Hot water sponge cake	Springform cake tin, diameter 26 cm	2		160-170	30-35
Hot water sponge cake, 2 levels	x 2 Springform cake tin, diameter 26 cm	3+1		150-160 [2]	35-50

[1] Preheat the appliance for five minutes. Do not use the rapid heating function.
[2] Preheat the appliance. Do not use the rapid heating function.

Grilling

Recommended settings for grilling

Food	Accessory/cookware	Shelf position	Type of heating → *Page 7*	Temperature in °C/grill setting	Cooking time in mins
Toasting bread	Wire rack	5		3 [1]	5-6

[1] Do not preheat the appliance.

27 Installation instructions

Observe this information when installing the appliance.

27.1 General installation instructions

Follow these instructions before you start with the installation of the appliance.

- The safe operation of this appliance can only be guaranteed if it has been installed to a professional standard in accordance with these installation instructions. The installer shall be liable for damages incurred as a result of incorrect installation.
- Do not use the door handle for the transport or installation.
- Check the appliance for damage after unpacking it. Do not connect the appliance if it has been damaged in transit.
- Before starting up the appliance, remove any packaging material and adhesive film from the cooking compartment and the door.
- Proceed in accordance with the installation sheets for installing accessories.
- Fitted units must be heat-resistant up to 95 °C, and adjacent unit fronts up to 70 °C.
- Do not install the appliance behind a decorative door or the door of a kitchen unit. There is a risk of overheating.
- Cut-out work on the units should be carried out before installing the appliance. Remove any shavings. Otherwise, the correct operation of electrical components may be adversely affected.
- The mains socket for the appliance must either be located in the hatched area a or outside of the area where the appliance is installed.
  Any unsecured units must be secured to the wall using a standard bracket b.

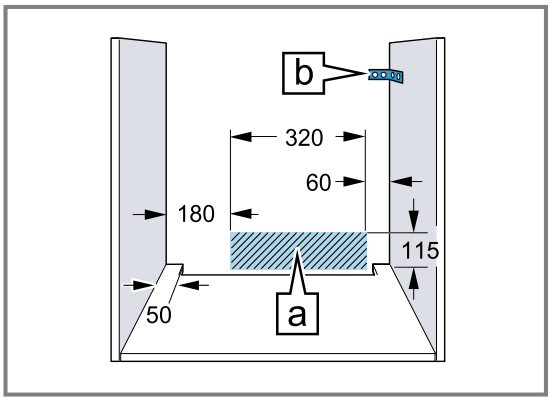

- Wear protective gloves so that you do not cut yourself. Parts that are accessible during installation may have sharp edges.
- Dimensions of the figures in mm.

⚠ WARNING – Risk of fire!

It is dangerous to use an extended power cord and non-approved adapters.

- ▸ Do not use multiple socket strips.
- ▸ Only use extension cables that are certified, have a minimum cross section of 1.5 mm² and comply with the applicable national safety requirements.
- ▸ If the power cord is too short, contact customer service.
- ▸ Only use adapters approved by the manufacturer.

ATTENTION!

Carrying the appliance by the door handle could break it. The door handle cannot support the weight of the appliance.

- ▸ Do not carry or hold the appliance by the door handle.

27.2 Appliance dimensions

You will find the dimensions of the appliance here

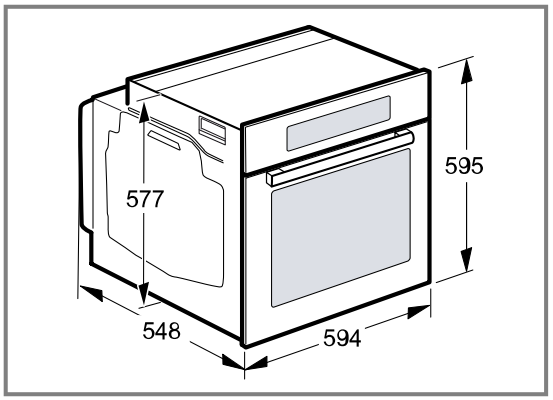

27.3 Installation below a worktop

Observe the installation dimensions and the installation instructions when installing below a worktop.

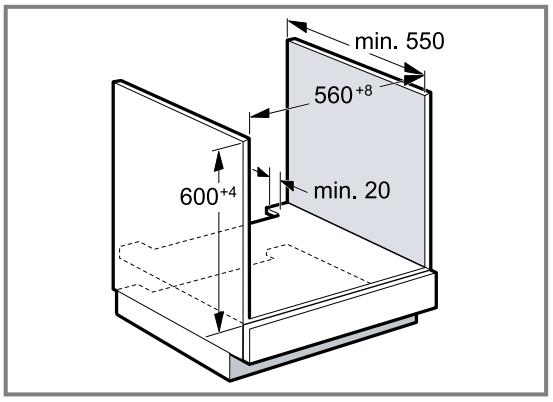

- To ventilate the appliance, the intermediate floor must have a ventilation cut-out.
- The worktop must be secured to the fitted unit.
- Observe any available installation instructions for the hob.
- Observe different national installation instructions for the hob.

27.4 Installation underneath a hob

If the appliance is installed under a hob, the following minimum dimensions must be adhered to (including substructure, if applicable).

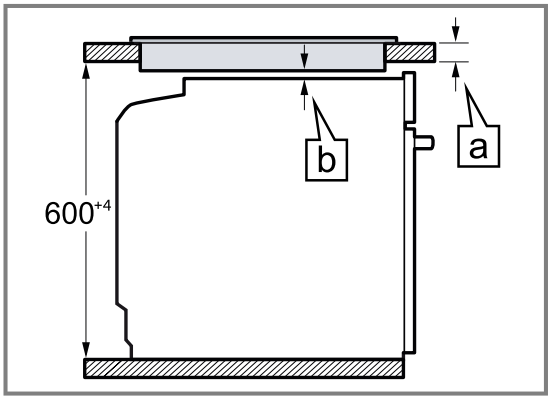

The minimum worktop thickness [b] a is based on the required minimum clearance [a].

Hob type	a raised in mm	a flush in mm	b in mm
Induction hob	37	38	5
Full-surface induction hob	47	48	5
Gas hob	27	38	5[1]
Electric hob	27	30	2

[1] Observe different national installation instructions for the hob.

27.5 Installation in a tall unit

Observe the installation dimensions and the installation instructions when installing in a tall unit.

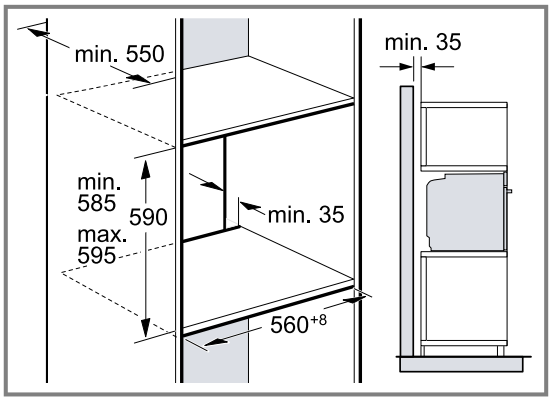

- To ventilate the appliance, the intermediate floors must have a ventilation cut-out.
- If the tall unit has another back panel in addition to the element back panels, this must be removed.
- Only fit the appliance up to a height which allows accessories to be easily removed.

27.6 Installing two appliances on top of each other

Your appliance can also be installed above or below another appliance. Observe the installation dimensions and the installation instructions when installing appliances on top of each other.

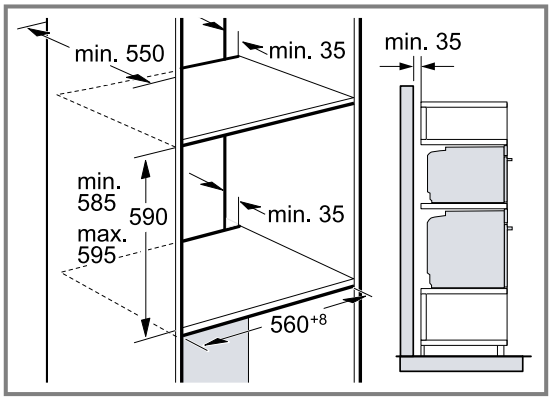

- To ventilate the appliances, the intermediate floor must have a ventilation cut-out.
- To ensure sufficient ventilation of the two appliances, there must be a ventilation opening of at least 200 cm² in the base area. To do this, trim the base panel or fit a ventilation grille.
- Ensure that air exchange is guaranteed in accordance with the diagram.

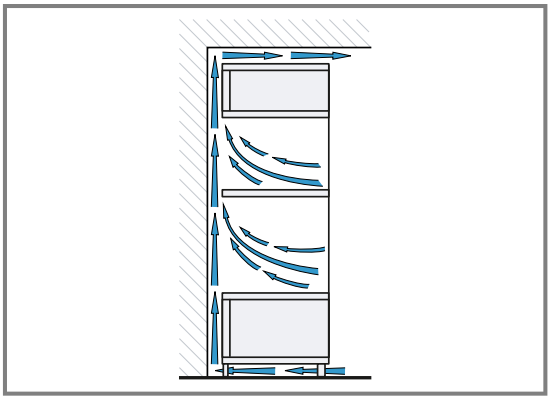

- Only fit appliances up to a height that allows accessories to be easily removed.

27.7 Corner installation

Observe the installation dimensions and the installation instructions when installing in a corner.

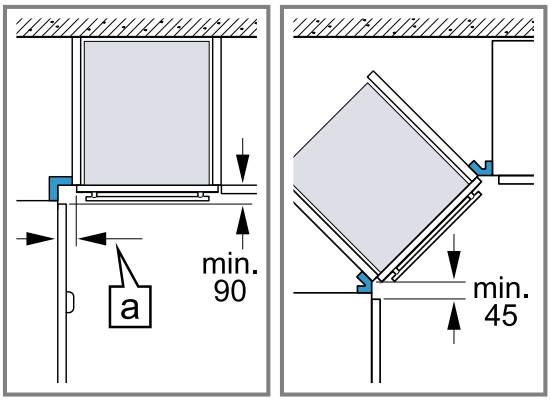

- To ensure that the appliance door can be opened, you must take the minimum dimensions into consideration when installing in a corner. The dimension a is dependent on the thickness of the unit front and the handle.

27.8 Electrical connection

In order to safely connect the appliance to the electrical system, follow these instructions.

- The appliance corresponds to protection class I and must only be operated with a protective earth connection.
- The fuse protection must correspond to the power rating specified on the appliance's rating plate and to the local regulations.
- The appliance must be disconnected from the power supply whenever installation work is being carried out.

- The appliance must only be connected using the power cable provided.
- The power cable must be plugged in at the rear of the appliance until you hear a clicking sound. A 3 m power cable can be obtained from the after-sales service.
- The power cable must only be replaced with a cable from the original manufacturer. This is available from after-sales service.
- Contact protection must be guaranteed by the installation.
- If the display on the appliance remains dark, it has not been connected correctly. Disconnect the appliance from the mains and check the connection.

Electrically connect the appliance with the protective contact plug

Note: The appliance must only be connected to a protective contact socket that has been correctly installed.

- Insert the plug into the protective contact socket. When the appliance is installed, the mains plug of the power cord must be freely accessible. If free access is not possible, an isolating switch must be integrated into the permanent electrical installation according to the installation regulations.

Electrically connecting an appliance without a protective contact plug

Note: Only licensed specialists may connect the appliance. Damage caused by incorrect connection is not covered under the warranty.
An isolating switch must be integrated into the permanent electrical installation according to the installation regulations.

1. Identify the phase and neutral conductors in the socket.
   The appliance may be damaged if it is not connected correctly.
2. Connect the hob in accordance with the connection diagram.
   See the rating plate for the voltage.
3. Connect the wires of the mains power cable according to the colour coding:
   - Green/yellow = Protective conductor ⏚
   - Blue = Neutral conductor
   - Brown = Phase (external conductor)

27.9 Installing the appliance

1. Slide the appliance in fully and centre it.

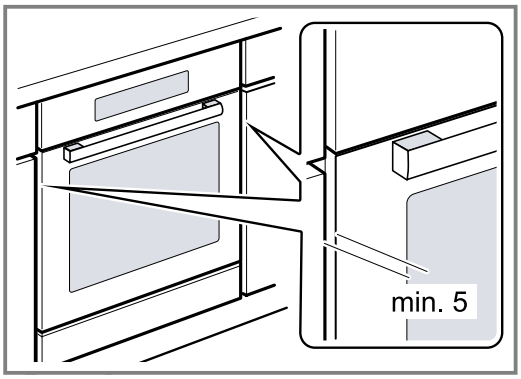

2. Screw the appliance into place.

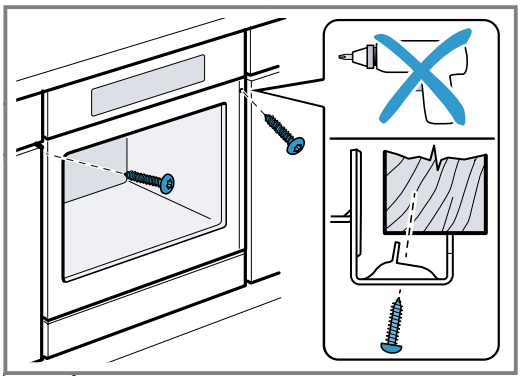

Note: The gap between the worktop and the appliance must not be closed by additional battens.
Thermal insulation strips must not be fitted to the side panels of the surround unit.

27.10 For handleless kitchens with vertical bar handle strips:

1. Attach a suitable filling piece in order to cover any sharp edges and to guarantee a safe installation.

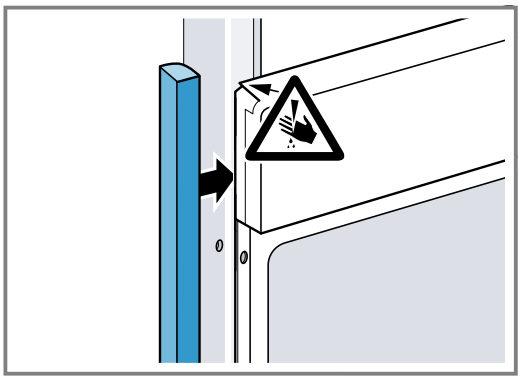

2. Pre-drill aluminium profiles to establish a screw connection.

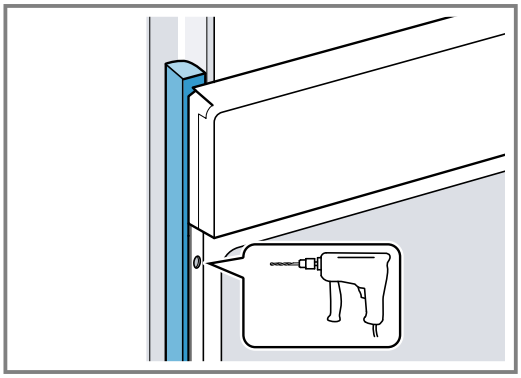

3. Secure the appliance using a suitable screw.

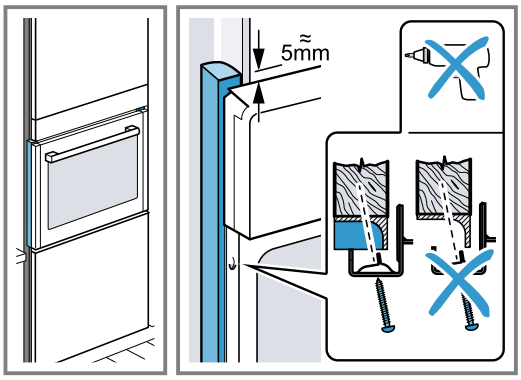

27.11 Removing the appliance

1. Disconnect the appliance from the power supply.
2. Undo the fastening screws.
3. Lift the appliance slightly and pull it out completely.

Thank you for buying a Bosch Home Appliance!

Register your new device on MyBosch now and profit directly from:

- **Expert tips & tricks for your appliance**
- **Warranty extension options**
- **Discounts for accessories & spare-parts**
- **Digital manual and all appliance data at hand**
- **Easy access to Bosch Home Appliances Service**

Free and easy registration – also on mobile phones:
www.bosch-home.com/welcome

Looking for help? You'll find it here.

Expert advice for your Bosch home appliances, help with problems or a repair from Bosch experts.
Find out everything about the many ways Bosch can support you:
www.bosch-home.com/service
Contact data of all countries are listed in the attached service directory.

BSH Hausgeräte GmbH
Carl-Wery-Straße 34
81739 München, GERMANY
www.bosch-home.com

A Bosch Company

9001844244 (030309)
en