OVEN

BO47.1.2 BO48.1.2

GAGGENAU

You can find additional information and explanations online.
Scan the QR code on the title page.

Table of contents

INFORMATION FOR USE

1 Safety ... 2
2 Preventing material damage ... 5
3 Environmental protection and saving energy ... 6
4 Familiarising yourself with your appliance ... 6
5 Accessories ... 10
6 Before using for the first time ... 12
7 Basic operation ... 13
8 Timer functions ... 13
9 Long-term timer ... 15
10 Childproof lock ... 15
11 Rotisserie spit ... 15
12 Searing function ... 17
13 Automatic programmes ... 18
14 Individual recipes ... 19
15 Core temperature probe ... 20
16 Home Connect ... 22
17 Basic settings ... 24
18 Cleaning and servicing ... 26
19 Pyrolytic self-cleaning ... 29
20 Troubleshooting ... 30
21 Disposal ... 33
22 How it works ... 33
23 Customer Service ... 56
24 Declaration of Conformity ... 57

25 INSTALLATION INSTRUCTIONS ... 58
25.1 General installation instructions ... 58

1 Safety

Observe the following safety instructions.

1.1 General information

- Read this instruction manual carefully.
- Keep the instruction manual and the product information safe for future reference or for the next owner.
- Do not connect the appliance if it has been damaged in transit.

1.2 Intended use

This appliance is designed only to be built into kitchen units. Read the special installation instructions.
Only a licensed professional may connect appliances without plugs. Damage caused by incorrect connection is not covered under the warranty.

Only use this appliance:
- To prepare meals and drinks.
- in private households and in enclosed spaces in a domestic environment.
- Up to an altitude of 2000 m above sea level.

1.3 Restriction on user group

This appliance may be used by children aged 8 or over and by people who have reduced physical, sensory or mental abilities or inadequate experience and/or knowledge, provided that they are supervised or have been instructed on how to use the appliance safely and have understood the resulting dangers.
Do not let children play with the appliance.
Children must not perform cleaning or user maintenance unless they are at least 15 years old and are being supervised.
Keep children under the age of 8 years away from the appliance and power cable.

1.4 Safe use

Always place accessories in the cooking compartment the right way round.
→ *"Accessories", Page 10*

⚠ WARNING – Risk of fire!

Combustible objects that are left in the cooking compartment may catch fire.

- Never store combustible objects in the cooking compartment.
- If smoke is emitted, the appliance must be switched off or the plug must be pulled out and the door must be held closed in order to stifle any flames.

Loose food remnants, fat and meat juices may catch fire.

- Before using the appliance, remove the worst of the food residues and remnants from the cooking compartment, heating elements and accessories.

Opening the appliance door creates a draught. Greaseproof paper may come into contact with the heating element and catch fire.

- Never place greaseproof paper loosely over accessories when preheating the appliance and while cooking.
- Always cut greaseproof paper to size and use a plate or baking tin to hold it down.

⚠ WARNING – Risk of burns!

The appliance and its parts that can be touched become hot during use.

- Caution should be exercised here in order to avoid touching heating elements.
- Young children under 8 years of age must be kept away from the appliance.

Accessories and cookware get very hot.

- Always use oven gloves to remove accessories or cookware from the cooking compartment.

When the cooking compartment is hot, any alcoholic vapours inside may catch fire. The appliance door may spring open. Hot steam and jets of flame may escape.

- Only use small quantities of drinks with a high alcohol content in food.
- Do not heat spirits (≥ 15% vol.) when undiluted (e.g. for marinating or pouring over food).
- Open the appliance door carefully.

The telescopic shelves become hot when the appliance is in use.

- Allow hot telescopic shelves to cool down before touching them.
- Only touch hot telescopic shelves with oven gloves.

The inside of the appliance door becomes very hot during operation.

- During or after operation of the appliance, only touch the appliance door at the surface intended for this on the side.
- Always open the appliance door as far as it will go.
- Ensure that the appliance door does not swing back.

⚠ WARNING – Risk of scalding!

The accessible parts of the appliance become hot during operation.

- Never touch these hot parts.
- Keep children at a safe distance.

Hot steam may escape when you open the appliance door. Steam may not be visible, depending on the temperature.

- Open the appliance door carefully.
- Keep children at a safe distance.

If there is water in the cooking compartment when it is hot, this may create hot steam.

- Never pour water into the cooking compartment when the cooking compartment is hot.

⚠ WARNING – Risk of injury!

Scratched glass in the appliance door may develop into a crack.

- Do not use any harsh or abrasive cleaners or sharp metal scrapers to clean the glass on the oven door, as they may scratch the surface.

The appliance and its parts that can be touched may have sharp edges.

- Take care when handling and cleaning them.
- If possible, wear protective gloves.

The hinges on the appliance door move when the door is opened and closed, which could trap your fingers.

- Keep your hands away from the hinges.

⚠ WARNING – Risk of electric shock!

Improper repairs are dangerous.

- Repairs to the appliance should only be carried out by trained specialist staff.
- Only use genuine spare parts when repairing the appliance.
- If the power cord or the appliance power cable of this appliance is damaged, it must be replaced with a special power cord or special appliance power cable, which is available from the manufacturer or its Customer Service.
- If the power cord of this appliance is damaged, it must be replaced by trained specialist staff.

If the insulation of the power cord is damaged, this is dangerous.
- Never let the power cord come into contact with hot appliance parts or heat sources.
- Never let the power cord come into contact with sharp points or edges.
- Never kink, crush or modify the power cord.

An ingress of moisture can cause an electric shock.
- Do not use steam- or high-pressure cleaners to clean the appliance.

If the appliance or the power cord is damaged, this is dangerous.
- Never operate a damaged appliance.
- Never pull on the power cord to unplug the appliance. Always unplug the appliance at the mains.
- If the appliance or the power cord is damaged, immediately unplug the power cord or switch off the fuse in the fuse box.
- Call customer service. →*Page 56*

Once the appliance has been installed, the openings in the back panel of the appliance must not be accessible to children.
- Read the special installation instructions.

⚠ WARNING – Risk of suffocation!
Children may put packaging material over their heads or wrap themselves up in it and suffocate.
- Keep packaging material away from children.
- Do not let children play with packaging material.

Children may breathe in or swallow small parts, causing them to suffocate.
- Keep small parts away from children.
- Do not let children play with small parts.

1.5 Core temperature probe

Follow these safety instructions when using the core temperature probe.

⚠ WARNING – Risk of electric shock!
An incorrect core temperature probe may damage the insulation.
- Only use the core temperature probe that is suitable for this appliance.

⚠ WARNING – Risk of injury!
The core temperature probe is sharp.
- Handle the core temperature probe with care.

1.6 Cleaning function

⚠ WARNING – Risk of fire!
The outside of the appliance gets very hot when the cleaning function is in progress.
- Never hang combustible objects, e.g. tea towels, on the door handle.
- Leave the front of the appliance clear.
- Keep children at a safe distance.

If the door seal is damaged, a large amount of heat is generated around the door.
- Do not scrub or remove the seal.
- Never operate the appliance if the seal is damaged or missing.

Loose food remnants, fat and meat juices may catch fire.
- Before using the cleaning function, always remove the worst of the food residues and remnants from the cooking compartment and accessories.

⚠ WARNING – Risk of serious harm to health!
The appliance gets very hot when the cleaning function is in progress. The non-stick coating on baking trays and tins is destroyed and noxious gases are released.
- Never clean non-stick baking trays or baking tins using the cleaning function.
- Only clean enamelled accessories at the same time.

⚠ WARNING – Risk of harm to health!
The cleaning function heats up the cooking compartment to a very high temperature so that food left over from roasting, grilling and baking will burn off. This process releases vapours, which can irritate mucous membranes.
- Keep the kitchen well ventilated while the cleaning function is running.
- Do not remain in the room for long periods.
- Keep children and pets away.

⚠ WARNING – Risk of burns!
The cooking compartment gets very hot when the cleaning function is in progress.
- Never open the appliance door.
- Allow the appliance to cool down.
- Keep children at a safe distance.

⚠ The outside of the appliance gets very hot when the cleaning function is in progress.
- Never touch the appliance door.
- Allow the appliance to cool down.
- Keep children at a safe distance.

Bulbs become very hot when switched on. There is still a risk of burning for some time after they have been switched off.
- Allow the bulbs to cool down before cleaning the appliance.
- Keep the lighting switched off for cleaning.

1.7 Halogen bulb

⚠ **WARNING – Risk of burns!**
The bulbs in the cooking compartment get very hot. There is still a risk of burning for some time after they have been switched off.
- Do not touch the glass cover.
- Avoid contact with your skin when cleaning.

Bulbs become very hot when switched on. There is still a risk of burning for some time after they have been switched off.
- Allow the bulbs to cool down before replacing them.

⚠ **WARNING – Risk of electric shock!**
When changing the bulb, the bulb socket contacts are live.
- Before replacing the bulb, ensure that the appliance is switched off in order to prevent a potential electric shock.
- Also unplug the appliance from the mains or switch off the fuse in the fuse box.

2 Preventing material damage

2.1 General information

ATTENTION
Objects on the cooking compartment floor will cause heat to build up. The baking and roasting times will no longer be correct and the enamel will be damaged.
- Do not place anything directly on the cooking compartment floor.
- Do not cover the cooking compartment floor with any sort of foil or greaseproof paper.

When the cooking compartment is hot, any water inside it will create steam. The change in temperature may cause damage.
- Never pour water into the cooking compartment when it is still hot.
- Never place cookware containing water on the cooking compartment floor.

The prolonged presence of moisture in the cooking compartment leads to corrosion.
- Do not keep moist food in the cooking compartment for a long time with the door closed.
- Do not store food in the cooking compartment.

Fruit juice dripping from the baking tray leaves stains that cannot be removed.
- When baking very juicy fruit flans, do not pack too much on the baking tray.
- If possible, use the deeper universal pan.

If aluminium foil comes into contact with the door pane, it could cause permanent discolouration.
- Do not allow aluminium foil in the cooking compartment to come into contact with the door pane.

Leaving the appliance to cool down with the door open will damage the front of neighbouring kitchen units over time.
- Always allow the cooking compartment to cool down with the door closed after cooking at high temperatures.
- Take care not to trap anything in the appliance door.
- Only leave the cooking compartment to dry with the door open if a lot of moisture was produced during operation.

If the seal is very dirty, the appliance door will no longer close properly during operation. This may damage the front of adjacent kitchen units.
- Keep the seal clean at all times.
- Never operate the appliance if the seal is damaged or missing.

Sitting or placing objects on the appliance door may damage it.
- Do not place, hang or support objects on the appliance door.
- Do not place cookware or accessories on the appliance door.

With certain models, accessories may scratch the door pane when closing the appliance door.
- Always push accessories fully into the cooking compartment.

Carrying the appliance by the door handle could break it. The door handle cannot support the weight of the appliance.
- Do not carry or hold the appliance by the door handle.

The heat during the pyrolytic self-cleaning may damage certain accessories.
- Do not clean the wire rack, rotisserie spit, cast roaster, core temperature probe, baking stone or other accessories using the pyrolytic self-cleaning function.
- Only clean GAGGENAU baking trays and grill trays with the pyrolytic self-cleaning function.

2.2 Core temperature probe

⚠ **WARNING – Risk of electric shock!**
An incorrect core temperature probe may damage the insulation.
- Only use the core temperature probe that is suitable for this appliance.

ATTENTION
Temperatures above 250 °C damage the core temperature probe.
- Only use the core temperature probe in your appliance at a maximum temperature of 250 °C.

- Do not use the core temperature probe with the full surface grill or compact grill types of heating.
- Before using full surface grill or compact grill, remove the core temperature probe from the cooking compartment.
- When using the core temperature probe with the full surface grill type of heating and air recirculation, set the temperature to a maximum of 250 °C.

You may damage the cable of the core temperature probe with the appliance door.

- Do not trap the cable of the core temperature probe in the appliance door.

The heat of the grill heating element may damage the core temperature probe.

- Ensure that the distance between the grill heating element and the core temperature probe and the cable of the core temperature probe is a few centimetres. In doing so, ensure that the meat can expand during the cooking process.

Moisture may damage the core temperature probe.

- Do not clean the core temperature probe in the dishwasher.

3 Environmental protection and saving energy

3.1 Disposing of packaging

The packaging materials are environmentally compatible and can be recycled.

- Sort the individual components by type and dispose of them separately.

3.2 Saving energy

If you follow these instructions, your appliance will use less power.

When cooking multiple dishes, do so in succession or in parallel.

✔ The cooking compartment is heated after cooking the first dish. This reduces the cooking time for the following dishes.

If the cooking time is relatively long, you can switch the appliance off 10 minutes before the cooking time ends.

✔ There will be enough residual heat to finish cooking the dish.

In hot air mode, you can bake on more than one level at a time.

✔ This will save energy.

Use dark-coloured, black-coated or enamelled baking tins.

✔ These types of baking tin absorb the heat particularly well.

Open the appliance door as little as possible during operation.

✔ This maintains the temperature in the cooking compartment and eliminates the need for the appliance to reheat.

4 Familiarising yourself with your appliance

4.1 Appliance

You can find an overview of the parts of your appliance here.

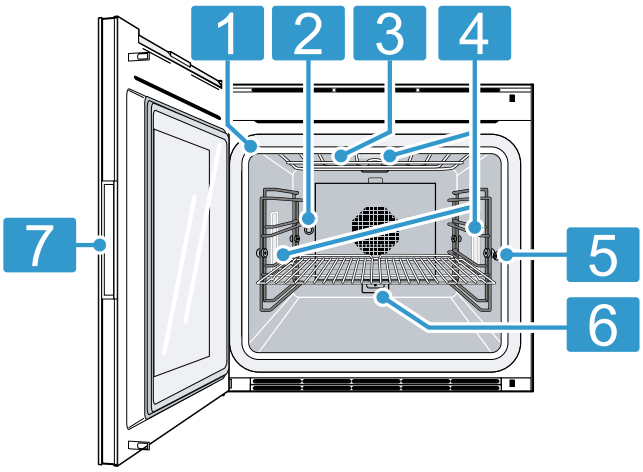

1	Door seal
2	Rotisserie spit socket
3	Grill element
4	Interior lighting
5	Connection socket for core temperature probe → *Page 20*
6	Connection socket for additional heating element (special accessory for the baking stone and roaster)
7	Recessed door handle

4.2 Cooking compartment

Depending on the appliance version, the cooking compartment has 4 or 5 shelf levels. Count the shelf levels from the bottom up.

⚠ **WARNING – Risk of burns!**

The inside of the appliance door becomes very hot during operation.

- During or after operation of the appliance, only touch the appliance door at the surface intended for this on the side.
- Always open the appliance door as far as it will go.
- Ensure that the appliance door does not swing back.

ATTENTION
Objects on the cooking compartment floor will cause heat to build up. The baking and roasting times will no longer be correct and the enamel will be damaged.
- Do not place anything directly on the cooking compartment floor.
- Do not cover the cooking compartment floor with any sort of foil or greaseproof paper.

The accessories may tip.
- Do not push the accessories between the shelf positions.

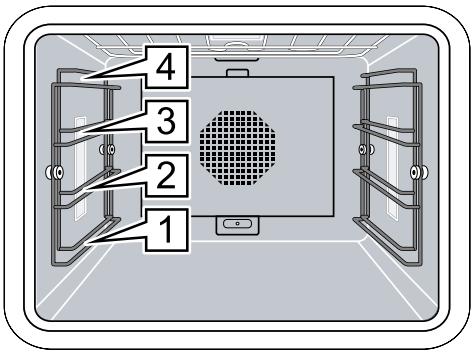

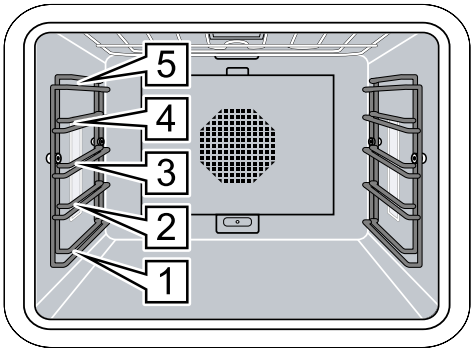

4.3 Controls

You can use the control panel to configure all functions of your appliance and to obtain information about the operating status.
On certain models, specific details such as colour and shape may differ from those pictured.
Depending on the appliance variant, the function selector and rotary selector are above or below the display.
All appliance types are operated in an identical manner.

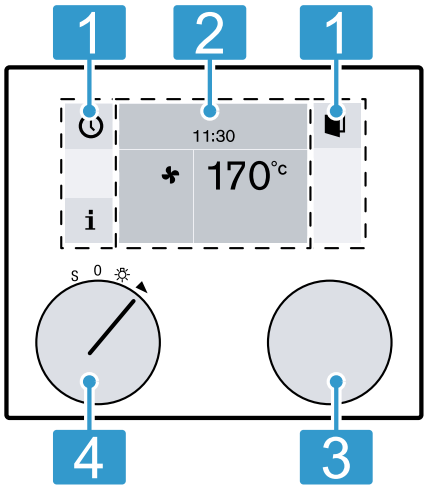

1	**Touch fields**	These areas are touch-sensitive. Touch a symbol to select the corresponding function.
2	**Display**	The display shows current settings and selection options, for example.
3	**Rotary selector**	Use the rotary selector to select the temperature and change additional settings.
4	**Function selector**	Use the function selector to select the type of heating, cleaning or the basic settings.

Symbols

Use the symbols to start or stop functions, or to navigate in the menu.

Symbol	Function
▶	Start
■	Stop
❚❚	Pause or end
✕	Cancel
C	Delete
✓	Confirm or save settings
>	Selection arrow
	Open the appliance door
i	Call up additional information
i!	Call up important information and prompts indicating that an action is required
»	Rapid heating with status display
	Calling up the automatic programmes Calling up individual recipes
rec ●	Record menu
	Edit settings
> A Ä	Enter a name
	Delete letters
	Childproof lock
	Call up the timer menu
	Call up the long-term timer
	Demo mode

Symbol	Function
	Core temperature probe →*Page 20*
	Start and stop the rotisserie spit.
	Searing function
	Network connection (Home Connect) →*Page 22*

Colours

The different colours are used to guide the user in the relevant setting situations.

Orange	▪ Initial settings ▪ Main functions
Blue	▪ Basic settings ▪ Cleaning
White	▪ Adjustable values

Appearance

Depending on the situation, the appearance of symbols, values or the entire display changes.

Zoom	The appliance zooms in on the setting that you have just changed. If you have set a time and it is about to run out, it will appear larger on the display just before it runs out, e.g. if you have set the timer.
Pared-down display	After a short while, the appliance reduces the amount of information shown on the display and only the most important information remains. This function is preset. You can change the setting in the basic settings.

Position of the function selector

Use the function selector to select the functions or types of heating.

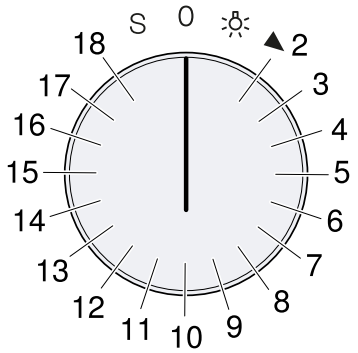

Position	Function/type of heating	Temperature	Application
0	Zero setting		
	Light		Switch on the interior lighting Access to other functions, e.g. automatic programmes, individual recipes, remote start via Home Connect
2	Hot air	50-300 °C Default temperature 170 °C	Hot air: For cakes, biscuits and bakes on more than one level. The fan in the back wall of the appliance distributes the heat evenly throughout the cooking compartment.
3	Eco hot air [1]	50-300 °C Default temperature 170 °C	Energy-saving hot air mode for cakes, meat, bakes and gratins. Optimal use is made of the residual heat. Convenience functions remain switched off, e.g. the interior lighting. The interior temperature can only be displayed while the appliance is heating up. Do not preheat the appliance. Make sure that the cooking compartment is cold and that there is nothing already in there when you place the

[1] Type of heating used to determine the energy efficiency class in accordance with EN60350-1.

Position	Function/type of heating	Temperature	Application
			food inside. Then start the specified cooking time. Always keep the appliance door closed when cooking. This prevents heat loss.
4	Top + bottom heat	50-300 °C Default temperature 170 °C	For cakes in tins or on a baking tray, bakes, roasts.
5	Top + 1/3 bottom heat	50-300 °C Default temperature 170 °C	For tray bakes, biscuits, cakes with meringue, grilling and browning bakes. Very well suited for heating the food once again specifically from above towards the end of preparation.
6	Top heat	50-300 °C Default temperature 170 °C	Targeted heat from above, for example grilling fruit flan with meringue.
7	1/3 top + bottom heat	50-300 °C Default temperature 170 °C	For cheesecake, bread in loaf tins, dishes in a bain marie, e.g. egg custard and crème brûlée. For braising without a lid and warming up food. The food does not dry out as much. Ideally suited to heating the food specifically from below once again towards the end of preparation.
8	Bottom heat	50-300 °C Default temperature 170 °C	For adding extra baking time (such as for moist fruit flans), for boiling down, for dishes in a bain marie.
9	Hot air + bottom heat	50-300 °C Default temperature 170 °C	Additional heat from below for moist cakes, e.g. fruit flans.
10	Hot air + 1/3 bottom heat	50-300 °C Default temperature 170 °C	For deep bakes, lasagne, onion tart, egg dishes, e.g. tortilla and farmer's omelettes.
11	Full surface grill + air recirculation	50-300 °C Default temperature 220 °C	Even, all-round heating for meat, poultry and whole fish.
12	Full surface grill	50-300 °C Default temperature 220 °C	For grilling flat pieces of meat, sausages or fillets of fish. Grilling and browning.
13	Compact grill	50-300 °C Default temperature 220 °C	Only the centre part of the grill element is heated. Energy-saving grilling for small amounts of food.
14	Baking stone function	50-300 °C Default temperature 250 °C	Can only be used with the baking stone and heating element – these are special accessories. Baking stone heated from below for crisp stone-baked pizza, bread or bread rolls.
15	Roaster function	50-220 °C Default temperature 180 °C	Can only be used with the roaster, pull-out system and heating element (special accessories). Heatable cast iron roaster for large joints of meat, bakes or festive roasts.
16	Dough proving	30-50 °C Default temperature 38 °C	Proving: For yeast dough and sour dough The dough rises considerably more quickly than at room temperature. The optimal temperature setting for yeast dough is 38 °C.
17	Defrost	40-60 °C Default temperature 45 °C	Even, gentle defrosting. For vegetables, meat, fish and fruit

Position	Function/type of heating	Temperature	Application
18	Keep warm	30-120 °C Default temperature 70 °C	Keeping food warm, preheating porcelain cookware.
S	Basic settings		Adapt the appliance to individual requirements in the basic settings → *Page 24*
S	+ Pyrolytic self-cleaning	485 °C	Self-cleaning

4.4 Automatic door opening

Press ◘ and the appliance opens the door. Use the recessed grip on the side of the appliance to open the appliance door fully.
If the childproof lock is activated or in the event of a power cut, the automatic door opening function does not work. You can open the door by hand using the recessed grip on the side.

4.5 Low power mode

The appliance is in low power mode if no function is set or the childproof lock is activated. The low power mode display appears if you do not implement any settings for a long time.
There are various displays for low power mode. The GAGGENAU logo and the time are preset.
In low power mode, the brightness of the control panel is reduced. The brightness of the display depends on the vertical viewing angle. You can change the display and the brightness in the basic settings → *Page 24*.
When "Off" is selected for the low power mode display in the basic settings, turn the rotary selector to exit low power mode.
When the door is open, the interior lighting switches off after a short time.

4.6 Additional information

Press i to display additional information, e.g. information about the type of heating that is set or the current cooking compartment temperature.
During continuous operation after heating up, slight temperature fluctuations are normal.

The appliance displays the i symbol for important information and indicates that an action is required. The appliance also occasionally displays important information about safety and the operating status automatically. These messages disappear automatically after a few seconds, or press ✔ to confirm the message.
For messages about Home Connect, the appliance also displays the Home Connect status in the i symbol.
→ *"Home Connect ", Page 22*

4.7 Cooling fan

The cooling fan switches on when the appliance is in operation. Depending on the appliance version, hot air escapes either over or beneath the door.
After removing your food from the appliance, keep the door closed until the appliance has cooled down. The appliance door must not be left half open as this may damage adjacent kitchen units. The cooling fan continues running for a certain period of time after the appliance has stopped heating and then it switches itself off automatically.
Do not cover the ventilation slots. Otherwise, the appliance will overheat.

4.8 Rapid heating

With the "Rapid heating" function, your appliance reaches the temperature you require particularly quickly in the "top heat", "bottom heat" and "top + bottom heat" types of heating.
To ensure an even cooking result, do not place your food in the cooking compartment until "Rapid heating" is complete and the symbol has gone out.
The "Rapid heating" function is set by default in the basic settings. In the basic settings → *Page 24*, you can select Rapid heating or Heat-up.

4.9 Automatic switch-off

For your protection, the appliance is equipped with an automatic switch-off function. The appliance switches off any heating process after 12 hours if the appliance controls are not used during this time. The display shows a message.
When programming with the long-term timer, the appliance does not activate the automatic switch-off function.

5 Accessories

Use original accessories. These have been made especially for your appliance.

Note: Accessories may become deformed if they get hot. Deformation has no effect on function. As the accessory cools down, it will regain its original shape.

The accessories supplied may differ depending on the appliance model.

Accessories		Use
Baking tray, enamelled	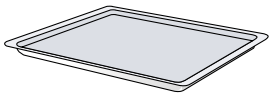	▪ Tray bakes ▪ Small baked items
Wire rack		▪ Cookware ▪ Cake tins ▪ Ovenproof dishes ▪ Roasting
Grill tray with wire rack		▪ Cookware ▪ Cake tins ▪ Ovenproof dishes ▪ Roasting
Glass tray	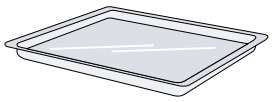	▪ Tray bakes ▪ Roasting
Rotisserie spit	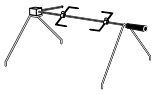	Rotisserie spit →*Page 15* for evenly cooking: ▪ Poultry ▪ Roasting
Core temperature probe	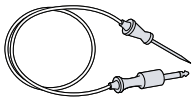	Core temperature probe →*Page 20* for the highly precise cooking of: ▪ Meat ▪ Fish ▪ Poultry ▪ Bread

5.1 Other accessories

You can purchase other accessories from our customer service, specialist retailers or online.
You will find a comprehensive range of products for your appliance in our brochures and online:
www.gaggenau.com
Accessories vary from one appliance to another. When purchasing accessories, always quote the exact product number (E no.) of your appliance.
You can find out which accessories are available for your appliance in our online shop or from our customer service.

BO470/471

Other accessories	Order number
Fully extendable telescopic pull-out rack	BA016105
Wire rack, chrome-plated, without opening, with feet	BA036105
Baking tray, enamelled, 15 mm deep	BA026115
Grill tray, enamelled, 30 mm deep	BA026105
Glass tray	BA046117
Heating element for baking stone and roaster, 230 V	BA056115
Heating element for baking stone and roaster, 400 V	BA056125
Baking stone, baking stone supports and pizza paddle	BA056133 **Note:** Order heating element separately
Pizza paddle, 2-part set	BA020002
Cast aluminium roaster GN2/3, height 165 mm, non-stick	GN340230 **Note:** Order heating element and pull-out system separately

BO480/481

Other accessories	Order number
Fully extendable telescopic pull-out rack	BA018105
Wire rack, chrome-plated, without opening, with feet	BA038105
Baking tray, enamelled, 30 mm deep	BA028115
Heating element for baking stone and roaster	BA058115
Baking stone, baking stone supports and pizza paddle	BA058133 **Note:** Order heating element separately

Other accessories	Order number
Pizza paddle, 2-part set	BA020002
Cast aluminium roaster GN2/3, height 165 mm, non-stick	GN340230 **Note:** Order heating element and pull-out system separately

5.2 Locking function

The locking function prevents the accessories from tilting when they are pulled out.
The accessories must be inserted into the cooking compartment correctly for the tilt protection to work correctly.

5.3 Sliding accessories into the cooking compartment

The accessories have a locking function. The accessories must always be inserted into the cooking compartment the right way round for the tilt protection to work properly.

ATTENTION
The accessories may tip.
- Do not push the accessories between the shelf positions.

1. When inserting the wire rack, ensure that the catch tappets ⓐ are facing downwards.

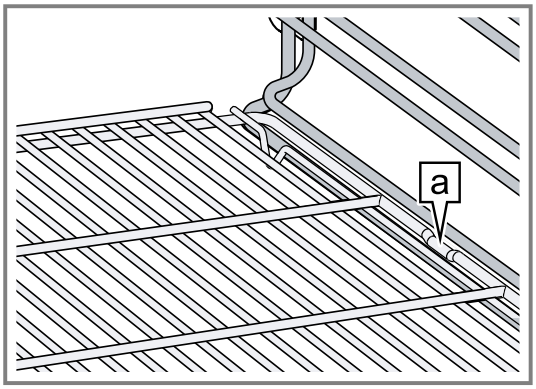

The catch tappets are located on the left and right of the wire rack at the centre on the outside.
2. Ensure that the safety bar ⓐ on the wire rack is located at the rear and is facing upwards.

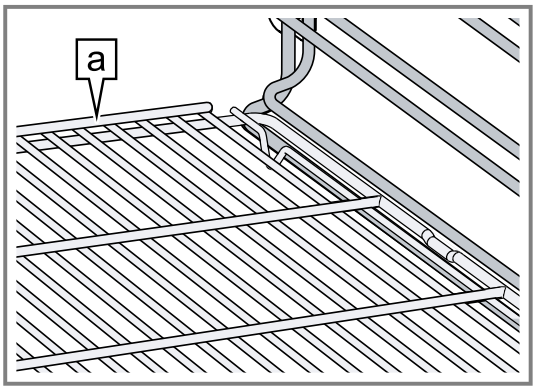

6 Before using for the first time

Configure the settings for initial start-up. Clean the appliance and accessories.

6.1 Initial use

Implement the settings for initial use before using your appliance.
First read the information under safety →*Page 2*.
The appliance must be installed and connected.
After connecting the appliance to the power supply, the GAGGENAU logo appears for approx. 30 seconds and then the appliance displays the "Initial settings" menu.
You can configure your new appliance for initial use.
The "Initial settings" menu appears only after the appliance has been connected to a power supply and switched on for the first time, or if the appliance has not been connected to a power supply for a number of days.
You can change all of the settings in the basic settings →*Page 24*.

Setting the language

Requirement: The display shows the preset language.
1. Use the rotary selector to select the required display language.
2. Press ✔ to confirm.

Setting the time format

Requirement: The display shows the possible formats 24h and AM/PM. 24h is preset.
1. Use the rotary selector to set the required format.
2. Press ✔ to confirm.

Set the time

Requirement: The display shows the time.
1. Use the rotary selector to set the required time.
2. Press ✔ to confirm.

Setting the date format

Requirement: The display shows the possible formats D.M.Y, D/M/Y and M/D/Y. D.M.Y is preset.
1. Use the rotary selector to set the required format.
2. Press ✔ to confirm.

Setting the date

Requirement: The display shows the preset date. The daily setting is already active.
1. Use the rotary selector to set the required day.
2. Press ❯ to switch to the month setting.
3. Use the rotary selector to set the month.
4. Press ❯ to switch to the year setting.
5. Turn the rotary selector to set the year.
6. Press ✔ to confirm.

Setting the temperature unit

Requirement: The display shows the possible units °C and °F. The unit °C is preset.

1. Turn the rotary selector to set the required unit.
2. Press ✔ to confirm.

Ending the initial use

Requirement: The display shows "Initial set-up complete".

- Press ✔.
- ✔ The appliance switches to low power mode.
- ✔ The display shows the low power mode display.
- ✔ The appliance is ready to use.

Heating up the appliance

1. Ensure that there is no leftover packaging in the oven cavity.
2. To eliminate the new-appliance smell, heat up the empty appliance for an hour at 200 °C in the Hot air type of heating ✤ with the door closed.

Cleaning accessories

- Before first use, clean the accessories thoroughly using hot soapy water and a soft cloth.

7 Basic operation

7.1 Activating the appliance

1. To exit low power mode, open the door and turn the rotary selector or touch a control panel.
2. Set the required function.

7.2 Opening the appliance door

1. Press ◘.
- ✔ The appliance opens the appliance door.
2. Use the recessed grip on the side of the oven to open the appliance door fully.
   In the event of a power failure, the automatic door-opening does not work. You can open the door by hand using the recessed grip on the side.

7.3 Switching on the appliance

1. Use the function selector to set the required type of heating.
- ✔ The display shows the selected type of heating and the suggested temperature.
2. If required, use the rotary selector to set the desired temperature.
- ✔ The display shows the heating symbol ».
- ✔ The bar displays the current heating status.
- ✔ Once the appliance reaches the set temperature, a signal tone sounds and the heating symbol goes out ».

Note: If the temperature is set to less than 70 °C, the cooking compartment light will remain switched off.

7.4 Switching off the appliance

- Turn the function selector to 0.

7.5 Switching on the appliance after automatic switch-off

Requirement: After prolonged operation, the switches off the appliance.

→ *"Automatic switch-off", Page 10*

1. Turn the function selector to 0.
2. Switch the appliance back on again.

8 Timer functions

Your appliance has different timer functions, with which you can control its operation.

8.1 Overview of the timer functions

Use ⏲ to select the different timer functions.

Timer function	Use
⌛	Short-term timer
◔	Cooking time [1]
⏲	Cooking time end [1]
⏱	Stopwatch

8.2 Calling up the timer menu

Note: You can call up the timer menu from any operating mode. The timer menu is not available if you turn the function selector to S in the basic settings.

- Press ⏲.
- ✔ The display shows the timer menu.

8.3 Exiting the timer menu

- Press **X**.
- ✔ The timer menu is closed.
- ✔ Any settings that are not saved are lost.

Note: You can exit the timer menu at any time.

[1] Not available in low power mode.

8.4 Short-term timer

The short-term timer runs independently of the other appliance settings. You can enter a maximum of 90 minutes.

Setting the short-term timer

1. Press ⏲.
✔ The display shows the "Short-term timer" ⧗ function.
2. Use the rotary selector to set the required cooking time.
3. Press ▶ to start.
✔ The appliance closes the timer menu.
✔ The time counts down.
✔ The display shows ⧗ and the time that has elapsed.
✔ A signal tone sounds once the time has elapsed.
4. Press ✔.
✔ The signal tone stops.

Stopping the short-term timer

1. Press ⏲.
2. Touch ❯ to select the "Short-term timer" ⧗ function.
3. Press ❚❚.
✔ The short-term timer stops.
✔ The display shows ▶.
4. To allow the timer to continue counting down, touch ▶.

Switching off the timer early

1. Press ⏲.
2. Touch ❯ to select the "Short-term timer" ⧗ function.
3. Press **C**.

8.5 Stopwatch

The stopwatch runs independently of the other appliance settings. The stopwatch counts from 0 seconds up to 90 minutes.
The stopwatch has a pause function. This allows you to stop the stopwatch from time to time.

Starting the stopwatch

1. Press ⏲.
2. Use ❯ to select the "Stopwatch" ⏱" function.
3. Press ▶ to start.
✔ The appliance closes the timer menu.
✔ The time counts down.
✔ The display shows ⏱ and the time that has elapsed.

Stopping the stopwatch

1. Press ⏲.
2. Use ❯ to select the "Stopwatch" ⏱" function.
3. Press ❚❚.
✔ The time stops.
✔ The display shows ▶.
4. To continue to run the stopwatch, press ▶.
✔ The time continues to run.
✔ Once it has reached 90 minutes, the display flashes and a signal tone sounds.
5. Press ✔.
✔ The signal tone stops.

Switching off the stopwatch

1. Press ⏲.
2. Use ❯ to select the "Stopwatch" ⏱" function.
3. Press **C**.

8.6 Cooking time

When you set the cooking time for your food, the appliance automatically switches off after this time. You can set a cooking time of between 1 minute and 23:59 hours.
You can change the type of heating and temperature while the cooking time counts down.

Setting the cooking time

Requirements
- The food is in the cooking compartment.
- You have set the type of heating and the temperature.

1. Press ⏲.
2. Use ❯ to select the "Cooking time" ◔ function.
3. Use the rotary selector to set the required cooking time.
4. Press ▶ to start.
✔ The appliance starts the cooking time.
✔ The appliance closes the timer menu.
✔ The display shows the temperature, the operating mode, the remaining cooking time and the cooking time end.
✔ One minute before the end of the cooking time, the display zooms in on the cooking time.
✔ Once the cooking time has elapsed, the appliance switches off.
✔ ◔ flashes and a signal tone sounds.
5. Press ✔, open the appliance door or set the function selector to 0.
✔ The signal tone stops.

Changing the cooking time

1. Press ⏲.
2. Use ❯ to select the "Cooking time" ◔ function.
3. Use the rotary selector to change the cooking time.
4. Press ▶ to start.

Deleting the cooking time

1. Press ⏲.
2. Use ❯ to select the "Cooking time" ◔ function.
3. Use **C** to cancel the cooking time.
4. Use **X** to return to normal operation.

Cancelling the entire procedure

▸ Turn the function selector to 0.

8.7 Cooking time end

You can move the cooking time end to a later time.
Example: It is 14:00. The dish requires a cooking time of 40 minutes. You want the meal to be ready at 15:30. Enter the cooking time of 40 minutes and delay the cooking-time end until 15:30. The electronics system calculates the start time. The appliance starts automatically at 14:50 and switches off at 15:30.
Bear in mind that food which spoils easily should not be left in the appliance for too long.

Delaying the cooking time end

Requirements
- The food is in the cooking compartment.
- You have set the type of heating, temperature and cooking time.

1. Press ⏲.

2. Use > to select the "Cooking time end" function.
3. Use the rotary selector to set the required cooking time end.
   If flashes, set the cooking time first.
4. Press ▸ to start.
✔ The appliance switches to standby.
✔ The display shows the operating mode, temperature, cooking time and cooking time end.
✔ The appliance starts at the calculated time and automatically switches off once the cooking time has elapsed.
✔ After the cooking time has elapsed, flashes and a signal tone sounds.
5. Press ✔, open the appliance door or set the function selector to 0.
✔ The signal tone stops.

Changing the cooking time end

1. Press .
2. Use > to select the "Cooking time end" function.
3. Use the rotary selector to set the required cooking-time end.
4. Press ▸ to start.

Cancelling the entire procedure

▸ Turn the function selector to 0.

9 Long-term timer

With the appliance in hot air mode, this function keeps the temperature between 50 °C and 230 °C.
You can keep food warm for up to 74 hours without having to switch the appliance on or off.
Bear in mind that food which spoils easily should not be left in the appliance for too long.

9.1 Starting the long-term timer

Requirement: The long-term timer is set to "Available" in the basic settings →*Page 24*.
1. Turn the function selector to .
2. Press .
✔ The display shows the default value 24h at 85 °C.
3. Press and use the rotary selector to set the required cooking time.
4. Press > and use the rotary selector to set the required cooking time end.
5. Press >, use the rotary selector to set the required switch-off date, and press ✔ to confirm.
6. Use the rotary selector to set the desired temperature.
7. Press ▸ to start.
✔ The appliance starts the long-term timer.
✔ The display shows and the temperature.
✔ The interior lighting and the display lighting are switched off.
✔ The control panel is locked.
✔ If you touch the control panel, no signal tone sounds.
✔ Once the time has elapsed, the appliance no longer heats up and the display goes out.
8. Turn the function selector to 0.

9.2 Switching off the long-term timer

▸ Turn the function selector to 0.

10 Childproof lock

Activate the childproof lock so that children cannot accidentally switch the appliance on or change the settings.
If the childproof lock is switched on and the power fails, the childproof lock can be deactivated when the power comes back on.

10.1 Activating the childproof lock

Requirements
- You can set the childproof lock to "available" in the basic settings →*Page 24*.
- The rotary selector is set to 0.

▸ Press and hold for approx. 6 seconds.
✔ The displays shows the low power mode display and .
✔ The childproof lock is now active.

10.2 Deactivating the childproof lock

Requirement: The function selector is set to 0.
1. Press and hold for approx. 6 seconds.
✔ The childproof lock is deactivated.
2. Set the appliance as normal.

11 Rotisserie spit

The rotisserie spit is particularly good for cooking large roasts, such as rolled roasting joints or poultry. The meat becomes crispy and brown.

ATTENTION
Heat may damage the rotisserie spit.
▸ Only use the rotisserie spit at temperatures up to a maximum of 250 °C.

The rotary movement of the rotisserie spit may damage the core temperature probe.
▸ Do not use the core temperature probe in conjunction with the rotisserie spit.
The heat in the oven causes damage to the handle of the rotisserie spit.
▸ Do not place the handle of the rotisserie spit in the oven.

Excessive weight may damage the rotisserie spit.
- The rotisserie spit has a maximum load capacity of 5 kg.

The rotisserie spit can be used with all operating modes. For best results, use the "Full surface grill" or "Top heat" types of heating.
Do not clean the rotisserie spit drive in the dishwasher.

11.1 Maximum weight

The maximum permissible weight varies depending on the appliance.

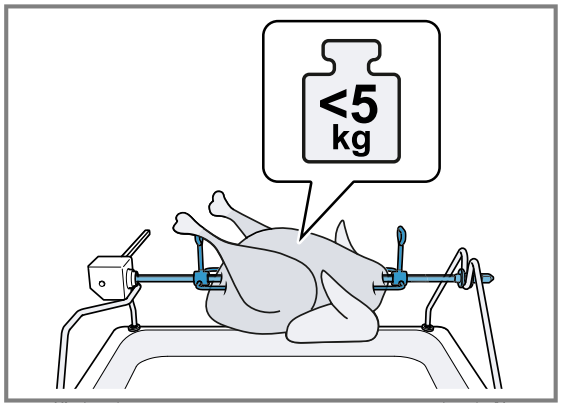

Appliance	Weight
Appliance series 400	5 kg
EB333	7 kg

11.2 Preparing the rotisserie spit

1. Push the two supporting frames into the sockets in the grill tray.
   - Position the supporting frames with the drive on the left-hand side.

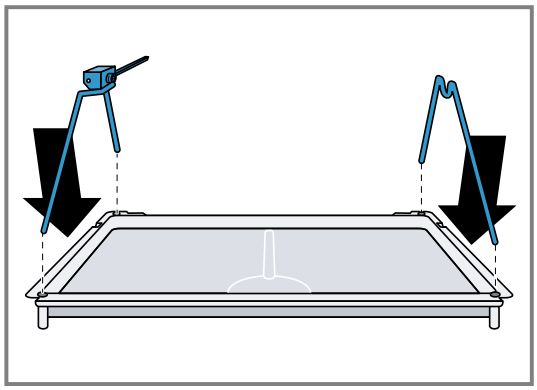

2. Press the button on the handle and push it on.

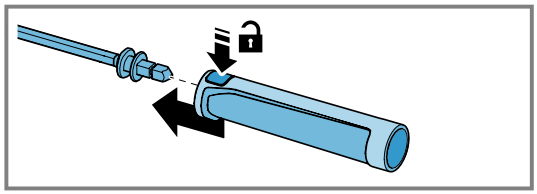

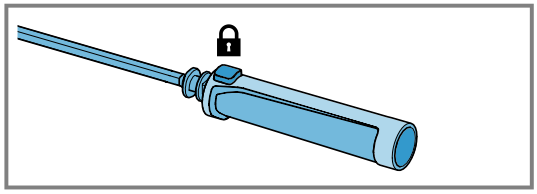

3. Fit the right-hand retaining prongs to the rotisserie spit and screw them in with a fixation screw.
4. Skewer the food and move it to the middle of the rotisserie spit.
5. Secure any protruding parts, e.g. chicken wings.
✔ The protruding parts must not touch the grill element.
6. Fit the left-hand retaining prongs to the rotisserie spit ① and screw them in with the fixation screw ②.

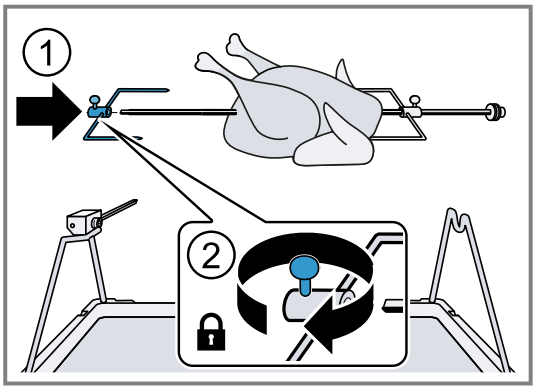

7. Secure the two smaller chickens using two retaining prongs each.
8. Set the rotisserie spit down onto the supporting frames.
   - Push the rod of the rotisserie spit into the drive so that it engages with its square profile.

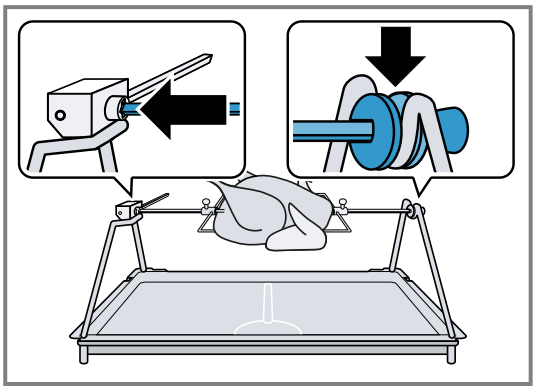

9. Press the button on the handle and remove it.

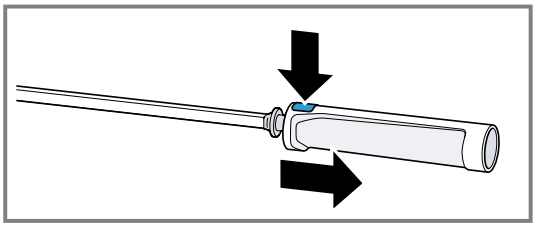

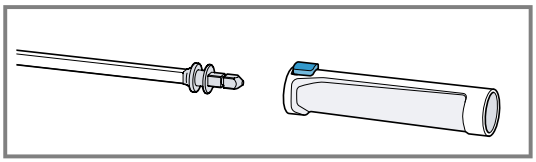

10. Insert the grill tray along with the rotisserie spit at the bottom shelf level.

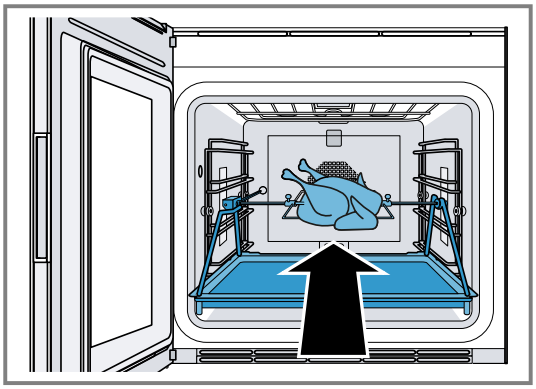

11. The drive shaft must engage in the opening in the rear panel of the appliance.
    - If necessary, turn the rotisserie spit slightly.

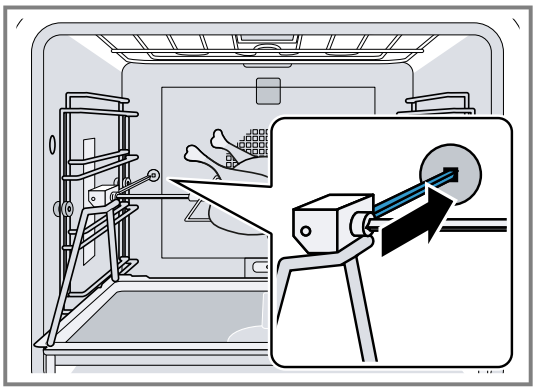

11.3 Switching on the rotisserie spit

1. Set the temperature and type of heating you require.
2. Press ✎.
✔ The appliance switches on the rotisserie spit drive.

11.4 Switching off and removing the rotisserie spit

⚠ **WARNING – Risk of burns!**
The rotisserie spit and associated retaining frame are hot.
- Wear gloves to take them out.
- Place the rotisserie spit and the associated retaining frame on a stable and heat-resistant surface.

Press the knob on the handle to release it from the rotisserie spit.
- When lifting the rotisserie spit, do not press the knob on the handle.

1. Press ✎.
✔ The rotisserie spit drive stops.
2. Use the function selector to switch off the appliance.
3. Remove the grill tray with the rotisserie spit and place it on a stable, heat-resistant surface.
4. To remove the rotisserie spit, press the button on the handle and push the handle on from the side.

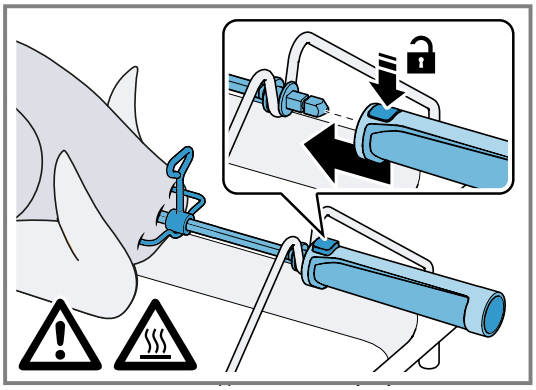

5. Remove the rotisserie spit with the food from the supporting frames and place on a serving platter.
6. Release the retaining prongs and pull the rotisserie spit out of the food.

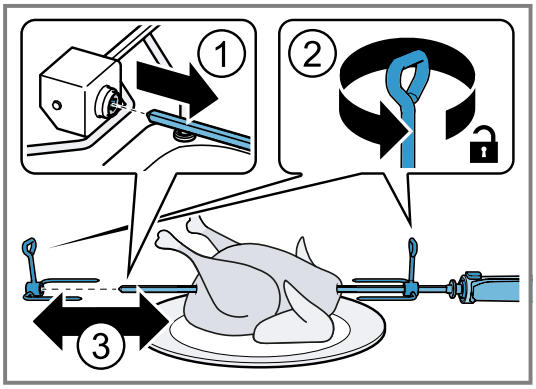

7. Press the button on the handle and remove it.

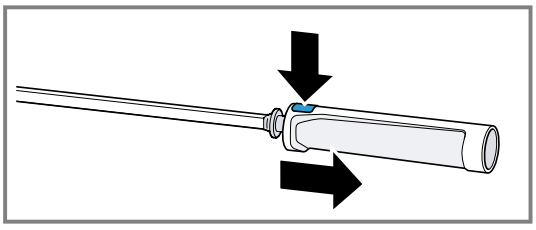

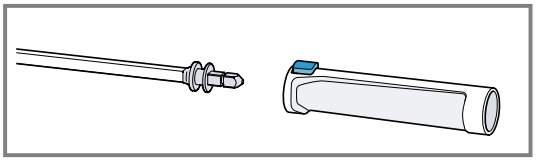

12 Searing function

With the searing function, the appliance heats up at full capacity for approx. 3 minutes. You can use this to sear steaks, for example.
To use the searing function, you will need a roaster, pull-out system and heating element – these are special accessories.

12.1 Starting the searing function

Requirement: The roaster function ▭ type of heating has been set.
- Press ».
✔ The searing function starts.

Tip: You can also set the searing function to start several times consecutively.

12.2 Ending the searing function early

- Press ».

13 Automatic programmes

You can prepare a wide range of food using the automatic programmes. The appliance selects the optimal setting for you.

13.1 Information about the settings for the automatic programmes

Observe the instructions for the settings of the automatic programmes.

- The cooking result depends on the quality of the food and the size and type of cookware. For an optimal cooking result, only use food that is in good condition and meat that is chilled to refrigerator temperature. For frozen food, only use food straight out of the freezer.
- The food is divided into categories. One or more dishes are listed for each category. The first position on the display shows the last selected category.
- The automatic programme suggests a temperature, type of heating and cooking time for the selected meal.
- For some food, the appliance prompts you to enter the weight. It is not possible to set weights outside the preprogrammed weight range.
- For some dishes, you are asked to enter the desired level of browning, the thickness of the food and the cooking level of the meat or vegetables.
- For some food, preheat the empty cooking compartment. Only place the food in the cooking compartment once the preheating is complete and a message is shown on the display.
- Your preferred settings are shown next time as a suggestion.
- For some recipes, you need the core temperature probe. Use the core temperature probe →*Page 20* for these recipes.
- To achieve good results, the cooking compartment must not be too hot for the type of food you have selected. If the cooking compartment is too hot, the display shows a corresponding notification. Allow the appliance to cool and restart it.

13.2 Setting the food

Note: The appliance guides you through the entire setting process. Follow the instructions in the display.

1. Turn the function selector to ☼.
2. Press ▙.
3. Press ✔ to confirm.
4. Use the rotary selector to select the required category.
5. Use the rotary selector to select the food that you require.
   For many dishes, you can change the settings to suit your needs.
   For some dishes, you must set the weight.

✔ The display shows the possible settings.

6. Press ⊡.

✔ The display shows information about the accessories and preparation.

7. Press ✔ to confirm the required settings.
8. Follow the information on the display.

✔ Once the cooking time has elapsed, a signal tone sounds.

✔ The appliance stops heating.

Note: If you open the appliance door during an automatic programme, this affects the cooking result. Open the appliance door only briefly. The appliance interrupts the automatic programme and continues to run when you close the appliance door.

Adding extra cooking time

After the cooking time has ended, you can leave some dishes to continue cooking if you are not satisfied with the cooking result.

Requirement: A query appears on the display asking if you want to continue cooking.

1. Press ✔ to confirm.
2. Select a single or double cooking time as required.
3. Press ▶ to start.
4. If the "Continue cooking" function has ended, turn the function selector to 0.

Changing and cancelling the programme

Note: Once you have started the programme, you can no longer change the settings.

- Turn the function selector to 0.

✔ The appliance ends the programme.

13.3 Calling up the last automatic programmes used

The appliance saves the last 5 dishes with the settings that you selected. You have the option to save these dishes with the selected settings as individual recipes.

Note: If you save the settings for the individual recipe using the "Last automatic programmes" function, you can no longer retroactively change the settings for individual recipes.

→ *"Individual recipes", Page 19*

1. Turn the function selector to ☼.

✔ The display shows ▙.

2. Press ▙.
3. Use the rotary selector to select "Last automatic programmes".
4. Press ✔ to confirm.
5. Use the rotary selector to select the food that you require.
6. Enter and save a name for the dish. →*Page 19*

14 Individual recipes

You have the option to save up to 50 individual recipes with a name so that, if required, you can access the recipe quickly and easily. You can record a recipe.

14.1 Recording a recipe

It is possible to set and record up to 5 phases consecutively.

1. Turn the function selector to ☼.
2. Press ▙.
3. Use the rotary selector to select "Individual recipes".
4. Press ✔ to confirm.
5. Use the rotary selector to select a free memory location.
6. Press rec●.
7. Use the function selector to set the required type of heating and the rotary selector to set the required temperature.
✔ The appliance records the cooking time.
8. Insert the core temperature probe into the socket in the cooking compartment and enter the core temperature for a phase →*Page 19*.
9. To record another phase, set the function selector to the required type of heating and use the rotary selector to set the required temperature.
✔ A new phase starts.
10. When the dish has reached the required cooking result, press ■.
11. Enter the name under "ABC".
→ *"Entering a name", Page 19*
The appliance only starts recording a phase once it has reached the set temperature.
Each phase must last at least one minute.
During the first minute of a phase, you can change the type of heating or the temperature.

Entering the core temperature for a phase

1. Insert the core temperature probe →*Page 20* into the socket in the cooking compartment.
2. Set the type of heating and the temperature.
3. Press ⌒.
4. Use the rotary selector to set the desired core temperature and press ⌒ to confirm.

14.2 Programming a recipe

1. Turn the function selector to ☼.
2. Press ▙.
3. Use the rotary selector to select "Individual recipes" and press ✔ to confirm.
4. Use the rotary selector to select a free memory location.
5. Press ▙.
6. Enter the name under "ABC".
→ *"Entering a name", Page 19*
7. Use ❯ to select the first phase.
✔ The display shows the type of heating and temperature that are selected at the start.
8. If required, use the rotary selector to change the type of heating and the temperature.
9. Insert the core temperature probe into the socket in the cooking compartment and enter the core temperature for a phase →*Page 19* or select the time setting using ❯.
You cannot enter the cooking time for phases with a programmed core temperature.
10. Use the rotary selector to set the required cooking time.
11. If the preparation is complete, use ✖ to finish making entries or use ❯ to select the next phase.
12. Use ✔ to save or ✖ to cancel, and exit the menu.

Entering the core temperature for a phase

Note: You cannot enter the cooking time for phases with a programmed core temperature.

1. Press ❯ to select the next phase.
2. Set the type of heating and the temperature.
3. Press ⌒.
4. Use the rotary selector to set the desired core temperature and press ⌒ to confirm.

14.3 Entering a name

1. Enter a name for the recipe under "ABC".
2. Use the rotary selector to select the letters.
A new word always begins with a capital letter.
Latin characters, certain special characters and numbers are available.
3. Briefly press ❯A̲ to position the cursor to the right.
4. Press and hold ❯A̲ to switch to umlauts and special characters.
5. Press ❯A̲ twice to insert a break.
6. Briefly press ❯Ä̲ to position the cursor to the right.
7. Press and hold ❯Ä̲ to switch to normal characters.
8. Press ❯Ä̲ twice to insert a break.
9. Press ⌫ to delete a letter.
10. Use ✔ to save or ✖ to cancel, and exit the menu.

14.4 Starting a recipe

1. Turn the function selector to ☼.
2. Press ▙.
3. Use the rotary selector to select "Individual recipes" and press ✔ to confirm.
4. Use the rotary selector to select the desired recipe.
5. If the recipe contains a saved core temperature, insert the core temperature probe →*Page 20*.
6. Press ▶ to start.
The cooking time does not start counting down until the appliance has reached the set temperature.
You can use the rotary selector to change the temperature while the recipe is in progress. Changing the temperature does not change the saved recipe.
✔ The operation begins.
✔ You can see the cooking time counting down.
✔ The display shows the settings for the phases on the display bar.

14.5 Changing a recipe

You can change the settings for a recorded or programmed recipe.

1. Turn the function selector to ☼.
2. Press ▙.

3. Use the rotary selector to select "Individual recipes" and press ✔ to confirm.
4. Use the rotary selector to select the desired recipe.
5. Press ⌄.
6. Use > to select the required phase.
✔ The display shows the programmed type of heating, temperature and cooking time.
7. If required, you can use the rotary selector or function selector to change the settings.
8. Use ✔ to save or X to cancel, and exit the menu.

14.6 Deleting a recipe

1. Turn the function selector to ☼.
2. Press ▮.
3. Use the rotary selector to select "Individual recipes" and press ✔ to confirm.
4. Use the rotary selector to select the desired recipe.
5. Use C to delete the recipe.
6. Press ✔ to confirm.

15 Core temperature probe

The core temperature probe makes it possible to cook with exact precision. The core temperature probe measures the temperature at 3 measuring points inside the food. When the required core temperature is reached, the appliance automatically switches off, ensuring that all food is cooked perfectly.

⚠ **WARNING – Risk of burns!**
The cooking compartment and the core temperature probe become very hot.
- Use oven gloves when inserting and removing the core temperature probe.

ATTENTION
Temperatures above 250 °C damage the core temperature probe.
- Only use the core temperature probe in your appliance at a maximum temperature of 250 °C.
- Do not use the core temperature probe with the full surface grill or compact grill types of heating.
- Before using full surface grill or compact grill, remove the core temperature probe from the cooking compartment.
- When using the core temperature probe with the full surface grill type of heating and air recirculation, set the temperature to a maximum of 250 °C.

⚠ **WARNING – Risk of electric shock!**
An incorrect core temperature probe may damage the insulation.
- Only use the core temperature probe that is suitable for this appliance.

ATTENTION
Moisture may damage the core temperature probe.
- Do not clean the core temperature probe in the dishwasher.

⚠ **WARNING – Risk of injury!**
The core temperature probe is sharp.
- Handle the core temperature probe with care.

Only use the core temperature probe supplied. The core temperature probe is available as a spare part from customer service or the online shop.
If you use the core temperature probe, never place the food on the top shelf level.
After use, always remove the core temperature probe from the cooking compartment. Never store the core temperature probe in the cooking compartment.
After each use, clean the core temperature probe with a damp cloth.

15.1 Estimated cooking time

After preheating, if the appliance has a temperature setting above 100 °C and the core temperature probe is inserted, the display shows an estimated cooking time approx. 5 to 20 minutes into the cooking time. The appliance continuously updates the estimated cooking time.
The longer the cooking process lasts, the more precise the estimated cooking time becomes. Do not open the appliance door; this distorts the estimated cooking time.
The display shows the estimated cooking time in normal operation and in the automatic programme.
Press i to display the current core temperature.
To display the current core temperature instead of the estimated cooking time, change the settings in the basic settings → *Page 24*.
The display shows "<15 °C" for the current core temperature at the beginning of the cooking time for approx. 3 to 4 minutes.
The measurable range is 15 °C to 99 °C. Outside of the measurable range, the display shows "<15 °C" or "- -°C" for the current core temperature.
If you leave food in the cooking compartment for some time after cooking, the core temperature will continue to rise somewhat due to the residual heat in the cooking compartment.
If you set programmes with the core temperature probe and the cooking timer at the same time, the appliance switches off whichever programme reaches the entered value first.

15.2 Core temperature guideline values

The following overview provides you with guideline values for the core temperature. The guideline values depend on the quality and composition of the food.
Only use fresh food that has not been frozen. For hygiene reasons, ensure that critical foods such as fish and game reach a core temperature of at least 62 °C to 70 °C and poultry and minced meat 80 °C to 85 °C.

Food	Core temperature guideline value in °C
Beef	
Sirloin, fillet of beef, entrecôte, very rare	45-47
Sirloin, fillet of beef, entrecôte, rare	50-52

Food	Core temperature guideline value in °C
Sirloin, fillet of beef, entrecôte, medium rare	58-60
Sirloin, fillet of beef, entrecôte, well done	70-75
Roast beef	80-85
Pork	
Joint of pork	72-80
Loin of pork, medium rare	65-70
Loin of pork, well done	75
Meatloaf	85
Fillet of pork	65-70
Veal	
Joint of veal, well done	75-80
Breast of veal, stuffed	75-80
Saddle of veal, medium rare	58-60
Saddle of veal, well done	65-70
Fillet of veal, rare	50-52
Fillet of veal, medium rare	58-60
Fillet of veal, well done	70-75
Game	
Saddle of venison	60-70
Leg of roe venison	70-75
Venison loin steaks	65-70
Saddle of hare, saddle of rabbit	65-70
Poultry	
Chicken	90
Guinea fowl	80-85
Goose, turkey, duck	85-90
Duck breast, medium rare	55-60
Duck breast, well done	70-80
Ostrich steak	60-65
Lamb	
Leg of lamb, medium rare	60-65
Leg of lamb, well done	70-80
Saddle of lamb, medium rare	55-60
Saddle of lamb, well done	65-75
Mutton	
Leg of mutton, medium rare	70-75
Leg of mutton, well done	80-85
Saddle of mutton, medium rare	70-75
Saddle of mutton, well done	80
Fish	
Fillet	62-65
Whole	65
Terrine	62-65
Miscellaneous	
Bread	96
Pâté	72-75
Terrine	60-70
Foie gras	45
Reheating food	75

15.3 Inserting the core temperature probe into the food

1. Insert the core temperature probe fully into the food.
2. Do not insert the core temperature probe into the fat.
3. Ensure that the core temperature probe is not touching any cookware or any bones.
4. Place the food in the cooking compartment.

Inserting the core temperature probe into meat

1. Insert the core temperature probe at the thickest point on the side as far as it will go into the meat.

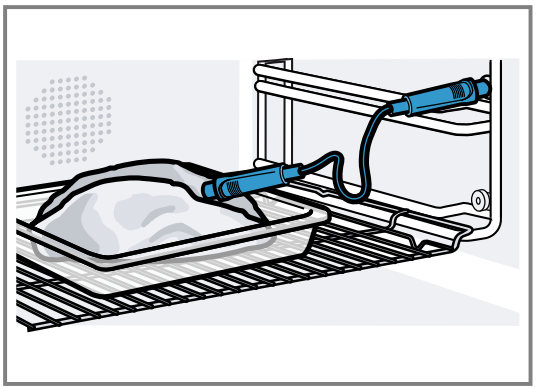

2. If there is more than one piece of meat, insert the core temperature probe into the middle of the thickest piece.

Inserting the core temperature probe into poultry

1. Insert the core temperature probe as far as it will go into the thickest point in the breast.

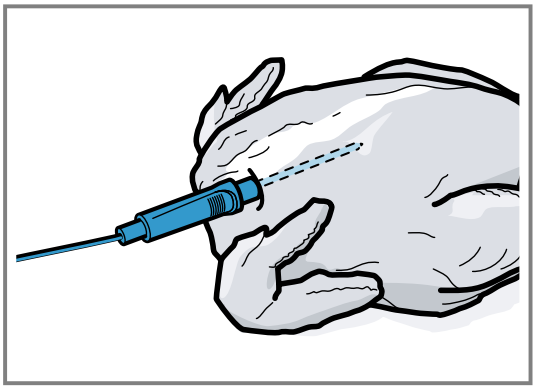

2. Depending on its composition, insert the core temperature probe into the poultry crossways or lengthways.

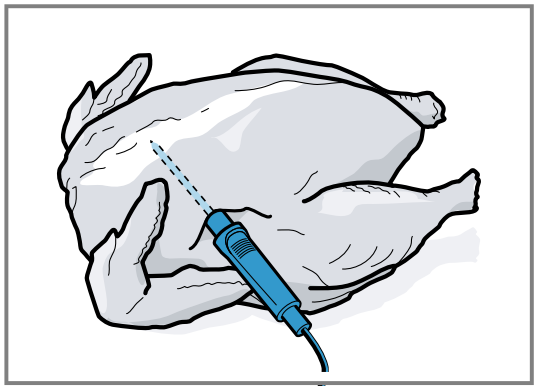

3. With poultry, ensure that the tip of the core temperature probe does not protrude into the cavity in the middle of the bird.

Inserting the core temperature probe into fish

1. Insert the core temperature probe behind the head as far as it will go towards the spine.

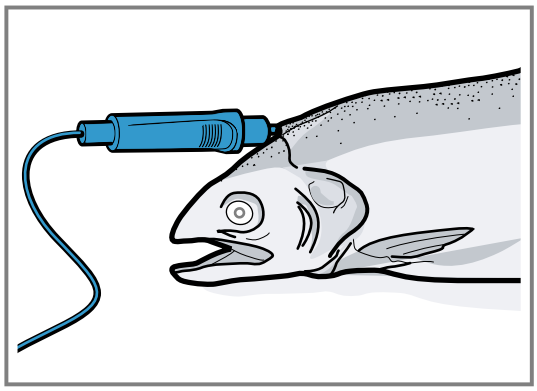

2. Place the whole fish onto the wire rack and prop it up in the swimming position using half a potato.

15.4 Turning the food

1. Do not pull out the core temperature probe when turning the food.
   If you pull out the core temperature probe during operation, the appliance resets all settings. You must reset the settings.
2. Turn the food.
3. Once you have turned the food, check that the core temperature probe is correctly positioned in the food.

15.5 Setting the core temperature probe

ATTENTION
The heat of the grill heating element may damage the core temperature probe.
- Ensure that the distance between the grill heating element and the core temperature probe and the cable of the core temperature probe is a few centimetres. In doing so, ensure that the meat can expand during the cooking process.

You may damage the cable of the core temperature probe with the appliance door.
- Do not trap the cable of the core temperature probe in the appliance door.

1. Slide the food into the cooking compartment with the core temperature probe inserted.
2. Insert the core temperature probe into the socket in the cooking compartment.
3. Close the appliance door.
4. Turn the function selector to the required type of heating.
5. Use the rotary selector to set the cooking compartment temperature.
6. Press ⌒.
7. Use the rotary selector to set the desired core temperature and press ⌒ to confirm.
   - Ensure that the set core temperature is higher than the current core temperature.

   You can change the set core temperature at any time.
   - ✔ The appliance heats up using the set type of heating.
   - ✔ The display shows the current core temperature and, beneath it, the set core temperature.
   - ✔ Once the food reaches the core temperature that has been set, a signal tone sounds.
   - ✔ The appliance ends the cooking process automatically.
8. Press ✔ to confirm.
9. Turn the function selector to 0.

Changing the set core temperature

1. Press ⌒.
2. Use the rotary selector to change the set core temperature for the food and press ⌒ to confirm.

Deleting the set core temperature

1. Press ⌒.
2. Use **C** to delete the set core temperature.
   - ✔ The appliance continues heating in normal cooking operation.

16 Home Connect

This appliance is network-capable. Connecting your appliance to a mobile device lets you control its functions via the Home Connect app, adjust its basic settings and monitor its operating status.
The Home Connect services are not available in every country. The availability of the Home Connect function depends on the availability of Home Connect services in your country. You can find information about this at: *www.home-connect.com*.

The Home Connect app guides you through the entire login process. Follow the instructions in the Home Connect app to configure the settings.

Tip: Please also follow the instructions in the Home Connect app.

Notes
- Please note the safety precautions in this instruction manual and make sure that they are also observed when operating the appliance via the Home Connect app.
  → *"Safety", Page 2*

- Operating the appliance on the appliance itself always takes priority. During this time it is not possible to operate the appliance using the Home Connect app.
- In networked standby mode, the appliance requires a maximum of 2 W.

16.1 Setting up Home Connect

Requirements

- The appliance is connected to the power supply and is switched on.
- You have a mobile device with a current version of the iOS or Android operating system, e.g. a smartphone.
- The appliance is receiving signals from the WLAN home network (Wi-Fi) at its installation location.
- The mobile device and the appliance are within range of your home network's Wi-Fi signal.

1. Scan the following QR code.

   You can install the Home Connect app and connect your appliance via the QR code.
2. Follow the instructions in the Home Connect app.

16.2 Home Connect settings

You can adjust the Home Connect settings and network settings in your appliance's basic settings.
Which settings the display shows will depend on whether Home Connect has been set up and whether the appliance is connected to your home network.

Symbol	Basic setting	Possible settings	Explanation
LAN / WLAN	Connection type	LAN Wi-Fi	You can switch between connection types (LAN cable and Wi-Fi). Follow the instructions for setting up the relevant connection type.
	Connection	Connect Disconnect	You can switch the network connection on or off as required. The network information is retained after the appliance is switched off. After switching on the appliance, wait for a few seconds until it reconnects to the network. **Note:** In networked standby mode, the appliance requires a maximum of 2 W.
	Connect to app		Start the connection process between the app and the appliance.
⇩	Software update		As soon as a new software version is available, a message appears on the display. In the Home Connect menu, you can install the new software using ⇩.
	Remote control	Activate Deactivate	You can use the Home Connect app to access the appliance's functions. If the remote control has been deactivated, only the appliance's operating statuses are displayed in the app. The remote control is only available if you set the rotary selector to light position ☼. The light goes out after a few minutes.
	Permanent remote start	Activate Deactivate	When permanent remote start is activated, you can start and operate your appliance at any time without prior approval on the appliance. Permanent remote start is only available if you set the rotary selector to light position ☼. The light goes out after a few minutes.
⊗	Delete network settings		You can delete all network settings from the appliance at any time.
	Appliance information		The display shows: ▪ MAC address COM module ▪ Appliance serial number ▪ Software version Depending on the connection type, you can view more information, such as the SSID network name, by touching the arrow button.

16.3 Operating the appliance with the Home Connect app

You can use the Home Connect app to set and start the appliance remotely.

⚠ **WARNING – Risk of fire!**
Combustible objects that are left in the cooking compartment may catch fire.
- Never store combustible objects in the cooking compartment.
- If smoke is emitted, the appliance must be switched off or the plug must be pulled out and the door must be held closed in order to stifle any flames.

Requirements
- The appliance is switched on.
- The appliance is connected to the home network and to the Home Connect app.
- In order to be able to set the appliance via the app, the manual or permanent remote start must be selected in the "Remote Control Level" basic setting.

1. Set the function selector to ☼.
2. To activate the remote start, press ᯤ.
✔ ᯤ appears beside i.
3. Configure a setting in the Home Connect app and send it to the appliance.

   Notes
   - If you open the appliance door within 15 minutes of activating remote start or of the operation ending, the manual remote start is deactivated.
   - When you start the oven using the controls on the appliance itself, the remote start function is activated automatically. You can use the Home Connect app to adjust the settings or start a new programme.

16.4 Switching off the network connection

1. Turn the function selector to S.
2. Use the rotary selector to select "Basic settings".
3. Press ✔.
4. Use the rotary selector to select @.
5. Press ✔.
6. Use the rotary selector to select ᯤ.
7. Press ✔.
8. Use the rotary selector to select "Disconnect".
9. Save with ✔.
10. Turn the function selector to 0 to exit the basic settings menu.

✔ The changes are saved.

16.5 Software update

Your appliance's software can be updated using the software update function, e.g. for the purposes of optimisation, troubleshooting or security updates.
To do this, you must be a registered Home Connect user, have installed the app on your mobile device and be connected to the Home Connect server.

As soon as a software update is available, you will be informed via the Home Connect app and will be able to start the software update via the app. Once the update has been successfully downloaded, you can start installing it via the Home Connect app if you are in your home network (Wi-Fi). The Home Connect app informs you once installation is successful.

Notes
- The software update consists of two steps.
  - The first step is the download.
  - The second step is the installation on your appliance.
- You can continue to use your appliance as normal while updates are downloading. Depending on your personal settings in the app, software updates can also be set to download automatically.
- Installation takes a few minutes. You cannot use your appliance during installation.
- We recommend that you install security updates as soon as possible.

16.6 Remote diagnostics

Customer Service can use Remote Diagnostics to access your appliance if you contact them, have your appliance connected to the Home Connect server and if Remote Diagnostics is available in the country in which you are using the appliance.

Tip: For further information and details about the availability of Remote Diagnostics in your country, please visit the service/support section of your local website: *www.home-connect.com*.

16.7 Data protection

Please see the information on data protection.

The first time your appliance is registered on a home network connected to the Internet, your appliance will transmit the following types of data to the Home Connect server (initial registration):
- Unique appliance identification (consisting of appliance codes as well as the MAC address of the installed Wi-Fi communication module).
- Security certificate of the Wi-Fi communication module (to ensure a secure data connection).
- The current software and hardware version of your appliance.
- Status of any previous resetting to factory settings.

This initial registration prepares the Home Connect functions for use and is only required when you want to use the Home Connect functions for the first time.

Note: Please note that the Home Connect functions can only be utilised with the Home Connect app. Information on data protection can be retrieved in the Home Connect app.

17 Basic settings

You can configure the basic settings for your appliance to meet your needs.

17.1 Overview of the basic settings

Here you can find an overview of the basic settings and factory settings. The basic settings depend on the features of your appliance.

Display	Basic setting	Selection	Description
	Brightness	Levels 1, 2, 3, 4, 5 [1], 6, 7, 8	Set the display brightness.
	Low power mode display	On [1] Off ▪ Clock ▪ Clock + GAGGENAU logo [1] ▪ Date ▪ Date + GAGGENAU logo ▪ Clock + date ▪ Clock + date + GAGGENAU logo	Appearance of the display in low power mode Off: No display. You can use this setting to reduce the consumption of your appliance in low power mode. On: Multiple displays can be set. Press ✔ to confirm "On" and use the rotary selector to select the required display.
	Display screen	Reduced [1] Standard	"Reduced": After a short time, the display shows only the most important information.
	Touch field colour	Grey [1] White	Select the colour of the symbols on the touch fields.
	Touch field tone type	Tone 1 [1] Tone 2 Off	Press a touch field to select a signal tone.
	Touch field tone volume	Levels 1, 2, 3, 4, 5 [1], 6, 7, 8	Set the volume of the touch field tone.
	Rapid heating	On [1] Off	During rapid heating, the cooking compartment reaches the required temperature particularly quickly.
	Heating up signal	On [1] Off	The signal tone sounds when the appliance reaches the required temperature when heating up.
	Signal volume	Levels 1, 2, 3, 4, 5 [1], 6, 7, 8	Set the volume of the signal tone.
	Time format	AM/PM 24h [1]	Set the 24-hour format set or 12-hour format.
	Time	Current time	Set the time.
	Clock change	Manual [1] Automatic	Automatic conversion of the time when changing from summer time to winter time.
	Date format	D.M.Y [1] D/M/Y M/D/Y	Set the date format.
	Date	Current date	Set the date. Press > to switch between the year, month and day.
	Temperature unit	°C [1] °F	Set the temperature unit.
	Weight unit	kg [1] oz.	Set the weight unit.
	Language	German [1] French [...] English	Set the language for the text display. The system restarts when you change the language. The restart takes a few seconds. After restarting, the appliance closes the basic settings menu.

[1] Factory setting (may vary according to model)

Display	Basic setting	Selection	Description
	Factory settings	Restoring the appliance to the factory settings	The question: "Delete all individual settings made and reset to factory settings?" must be confirmed with ✔ or cancelled with ✘. When restoring factory settings, the appliance will delete individual recipes. After restoring factory settings, the "Initial settings" menu is displayed.
	Demo mode	On [1] Off	The demo mode is used for demonstration purposes only. The appliance does not heat up in demo mode. All other functions are available. The "Off" setting must be activated for normal operation. The setting is only possible in the first 3 minutes after connecting the appliance.
	Long-term timer	Not available [1] Available	Available: You can set the long-term timer →*Page 15*.
	Display the estimated cooking time with core temperature probe	On [1] Off	On: If you are using the core temperature probe, the display shows the estimated cooking time.
	Door lock	Off [1] On	The door lock prevents the appliance door from opening accidentally. With the "On" setting, press and hold for several seconds until the door opens.
	Childproof lock	Not available [1] Available	Available: You can activate the childproof lock →*Page 15*.
	Home network	LAN/WLAN Connection type Connection Connect to app Software update Remote control Permanent remote start Delete network settings Appliance info	Select settings for the connection to the home network and mobile devices. The display shows different setting options depending on the connection status.

17.2 Changing the basic settings

1. Turn the function selector to S.
2. Use the rotary selector to select "Basic settings".
3. Press ✔.
4. Use the rotary selector to select the required basic setting.
5. Press ✓.
6. Use the rotary selector to set the basic setting.
7. Press ✔ to save, or press ✘ to cancel and exit the current basic setting.
8. Turn the function selector to 0 to exit the basic settings menu.

✔ The changes are saved.

18 Cleaning and servicing

To keep your appliance working efficiently for a long time, it is important to clean and maintain it carefully.

18.1 Cleaning products

To avoid damaging the various surfaces on the appliance, do not use any unsuitable cleaning agents.

⚠ **WARNING – Risk of electric shock!**
An ingress of moisture can cause an electric shock.
- Do not use steam- or high-pressure cleaners to clean the appliance.

⚠ **WARNING – Risk of burns!**
The appliance and its parts that can be touched become hot during use.
- Caution should be exercised here in order to avoid touching heating elements.

[1] Factory setting (may vary according to model)

- Young children under 8 years of age must be kept away from the appliance.

Bulbs become very hot when switched on. There is still a risk of burning for some time after they have been switched off.

- Allow the bulbs to cool down before cleaning the appliance.
- Keep the lighting switched off for cleaning.

⚠ **WARNING – Risk of injury!**

Scratched glass in the appliance door may develop into a crack.

- Do not use any harsh or abrasive cleaners or sharp metal scrapers to clean the glass on the appliance door, as they may scratch the surface.

ATTENTION

Unsuitable cleaning agents damage the surfaces of the appliance.

- Do not use harsh or abrasive cleaning products.
- Do not use cleaning products with a high alcohol content.
- Do not use hard scouring pads or cleaning sponges.
- Do not use any special cleaners for cleaning the appliance while it is hot.

Salt contained in new sponge cloths may damage surfaces.

- Wash new sponge cloths thoroughly before use.

Using oven cleaner in a hot cooking compartment damages the stainless steel surfaces.

- Never use oven cleaner in the cooking compartment when it is still warm.
- Remove all food remnants from the cooking compartment and the appliance door before you next heat up the appliance.

⚠ **WARNING – Risk of fire!**

Loose food remnants, fat and meat juices may catch fire.

- Before using the appliance, remove the worst of the food residues and remnants from the cooking compartment, heating elements and accessories.

Suitable cleaning agents

Only use cleaning agents that are suitable for the different surfaces on your appliance.

Appliance door

Area	Suitable cleaning agents	Information
Door panel	▪ Glass cleaner	Do not use a glass scraper. Clean with a window cloth or a microfibre cloth.
Door seal	▪ Hot soapy water	Clean with a dishcloth. Do not remove or scrub. Do not use metal scrapers or glass scrapers for cleaning.
Display	▪ Soapy water	Wipe down using a microfibre cloth or a slightly damp cloth. Do not wipe with a wet cloth.

Cooking compartment

Area	Suitable cleaning agents	Information
Cooking compartment	▪ Hot soapy water	Clean with a dishcloth and dry with a soft cloth.
Very dirty cooking compartment	▪ Cleaning gel spray for ovens	The cleaning gel spray for ovens can be obtained from customer service or from the online shop. Observe the following information about the cleaning gel spray: ▪ The cleaning gel spray must not get into the door opening. ▪ Leave this to work for no more than 12 hours. ▪ Do not use it on hot surfaces. ▪ Rinse off thoroughly with water. ▪ Follow the manufacturer's instructions.
Glass cover for the cooking compartment light	▪ Hot soapy water	Clean with a dishcloth.
Shelf supports	▪ Hot soapy water	**Note:** If required, remove the shelf supports for cleaning. → *"Removing the shelf supports", Page 28* In the event of heavy soiling, leave to soak and use a brush.
Accessories	▪ Hot soapy water	Soak burnt-on residues and remove with a brush. Rinse thoroughly with clean water.
Core temperature probe	▪ Hot soapy water	Wipe with a damp cloth Do not clean in the dishwasher.
Rotisserie spit	▪ Hot soapy water	Do not clean the rotisserie spit drive in the dishwasher.

Area	Suitable cleaning agents	Information
		Clean the rotisserie spit, retaining prongs and handle in the dishwasher.
Fully extendable telescopic pull-out rack (special accessory)	▪ Hot soapy water	Clean with a dishcloth or scrubbing brush and dry with a soft cloth. Remove the fully extendable telescopic pull-out rack from the cooking compartment when using the pyrolytic self-cleaning function.
Baking stone (special accessory)	▪ Brush	Remove burnt-on residues with a brush. Never clean the baking stone with water.
Roaster (special accessory)	▪ Hot soapy water	Soak and then clean with a dishcloth or scrubbing brush. Do not clean the roaster in the dishwasher.

18.2 Microfibre cloth

The honeycomb microfibre cloth is especially suitable for cleaning easily damaged surfaces, such as glass, glass ceramic, stainless steel or aluminium. The microfibre cloth removes liquid and greasy deposits in one go.
The microfibre cloth can be obtained from customer service or from the online shop.

18.3 Removing the shelf supports

The wire racks can be removed for cleaning.

1. Place a tea towel in the cooking compartment to protect the enamel from scratches.
2. Undo the knurled nuts.

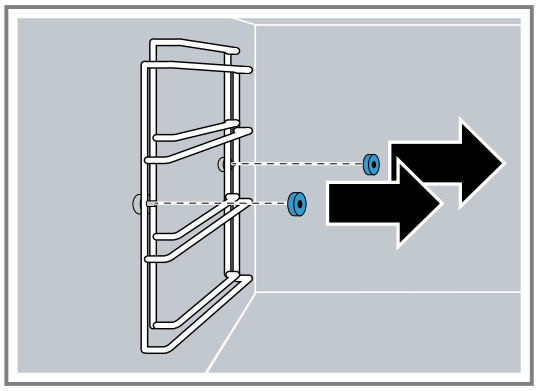

3. Lift the shelf supports slightly sideways away from the screw ① and pull them out towards the front ②.

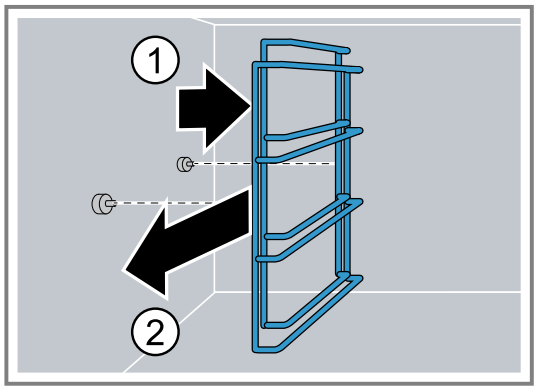

18.4 Fitting the shelf supports

Note: The shelf supports are identical and fit both the left and right sides.

1. Position the shelf supports such that the longer side is at the top.
2. Tighten the knurled nuts.

18.5 Cleaning the fully extendable telescopic pull-out rack

ATTENTION
Aggressive cleaners cause damage to the fully extendable telescopic pull-out rack.
- ▸ Do not clean the fully extendable telescopic pull-out rack in the dishwasher.
- ▸ Do not place the fully extendable telescopic pull-out rack in rinsing water.

The cleaning programme causes damage to the fully extendable telescopic pull-out rack.
- ▸ Do not clean the fully extendable telescopic pull-out rack using the appliance's cleaning programme.

1. Remove the fully extendable telescopic pull-out rack.
2. Undo the knurled nut.
3. Use a damp cloth to clean the pull-out rail.
   - ▸ Do not remove the lubricant on the pull-out rail.
   It is best to clean the pull-out rail while it is pushed in.

18.6 Cleaning the rotisserie spit

1. Do not clean the rotisserie spit in the dishwasher.

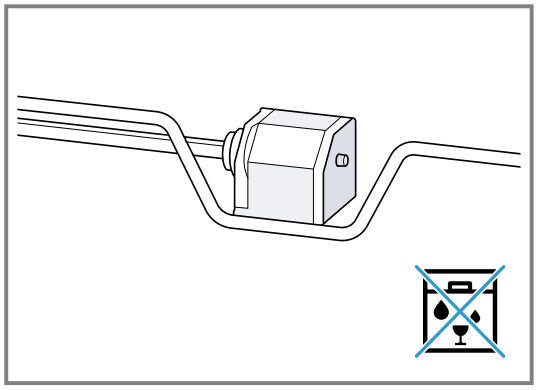

2. Clean the rotisserie spit, retaining prongs and handle in the dishwasher.

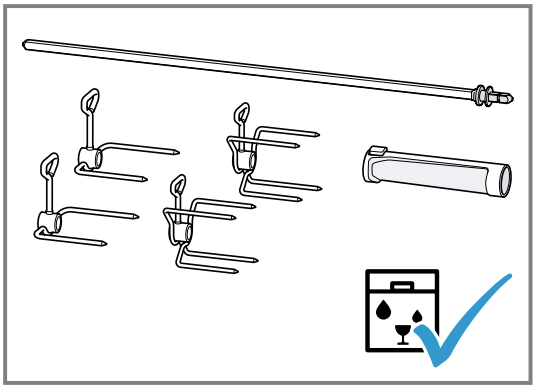

19 Pyrolytic self-cleaning

Follow these safety instructions when using the pyrolytic cleaning function.

⚠ **WARNING – Risk of fire!**
The outside of the appliance gets very hot when the cleaning function is in progress.
- Never hang combustible objects, e.g. tea towels, on the door handle.
- Leave the front of the appliance clear.
- Keep children at a safe distance.

⚠ **WARNING – Risk of serious harm to health!**
The appliance gets very hot when the cleaning function is in progress. The non-stick coating on baking trays and tins is destroyed and noxious gases are released.
- Never clean non-stick baking trays or baking tins using the cleaning function.
- Only clean enamelled accessories at the same time.

⚠ **WARNING – Risk of burns!**
The cooking compartment gets very hot when the cleaning function is in progress.
- Never open the appliance door.
- Allow the appliance to cool down.
- Keep children at a safe distance.

⚠ The outside of the appliance gets very hot when the cleaning function is in progress.
- Never touch the appliance door.
- Allow the appliance to cool down.
- Keep children at a safe distance.

⚠ **WARNING – Risk of harm to health!**
The cleaning function heats up the cooking compartment to a very high temperature so that food left over from roasting, grilling and baking will burn off. This process releases vapours, which can irritate mucous membranes.
- Keep the kitchen well ventilated while the cleaning function is running.
- Do not remain in the room for long periods.
- Keep children and pets away.

When the pyrolytic self-cleaning function is running, the appliance heats up to 485 °C. Residues from roasting, grilling or baking are incinerated. All you have to do is wipe the ash out of the cooking compartment.
The total duration of the pyrolytic self-cleaning function comprises the cleaning time and cooling period. Pyrolytic self-cleaning takes around 3 hours. The cooling time is approximately 1 hour. If required, you can delay the pyrolytic self-cleaning switch-off time, e.g. if you want the pyrolytic self-cleaning function to run overnight.

19.1 Preparing pyrolytic self-cleaning

⚠ **WARNING – Risk of fire!**
Loose food remnants, fat and meat juices may catch fire.
- Before using the cleaning function, always remove the worst of the food residues and remnants from the cooking compartment and accessories.

1. Wipe the cooking compartment with a damp cloth.
2. Wipe the door sill and the insides of the doors.
3. Completely remove all traces of cleaning agents.
4. Remove all loose objects from the cooking compartment.
   The shelf supports are pyrolysis-resistant.
   → *"Preparing the cleaning of accessories with the pyrolytic self-cleaning function", Page 29*
5. Ensure that the cover is located in the bush for the additional heating element at the rear of the cooking compartment.

19.2 Preparing the cleaning of accessories with the pyrolytic self-cleaning function

GAGGENAU Baking trays and grill trays are coated with a pyrolysis-safe enamel. Only clean GAGGENAU baking trays and grill trays with the pyrolytic self-cleaning function.

⚠ **WARNING – Risk of fire!**
Loose food remnants, fat and meat juices may catch fire.
- Before using the cleaning function, always remove the worst of the food residues and remnants from the cooking compartment and accessories.

ATTENTION
The heat during the pyrolytic self-cleaning may damage certain accessories.
- Do not clean the wire rack, rotisserie spit, cast roaster, core temperature probe, baking stone or other accessories using the pyrolytic self-cleaning function.
- Only clean GAGGENAU baking trays and grill trays with the pyrolytic self-cleaning function.

Notes

- The stainless steel bushes on grill trays may become discoloured during pyrolytic self-cleaning. This discolouration does not affect their usability.
- If the cooking compartment is extremely dirty, clean the baking tray or grill tray separately.

1. In each case, only slide one baking tray or grill tray onto the lowest shelf.
2. Slide the baking tray or grill tray in as far as it will go.

19.3 Starting the pyrolytic self-cleaning function

1. Remove all loose objects from the cooking compartment and remove coarse dirt.
2. Completely remove any cleaning agent residue.
3. Turn the function selector to S.

✔ ⁄+ lights up.

4. Press ✔ to confirm.

✔ The display shows the switch-off time at which the pyrolytic self-cleaning function will be finished.

5. If required, you can use the rotary selector to delay the switch-off time.
6. Press ✔ to confirm.
7. Press ▶ to start.
   The total duration of the pyrolytic self-cleaning function comprises the cleaning time and cooling period. The time for the relevant section of the pyrolytic self-cleaning function counts down on the display.

✔ For your safety, the appliance locks the appliance door. During cooling, the appliance unlocks the door opening mechanism as soon as the temperature has fallen below 200 °C.

✔ The cleaning time counts down on the display.

✔ If you have delayed the switch-off time, the time until the pyrolytic self-cleaning function starts counts down on the display.

✔ The light in the cooking compartment remains switched off.

✔ A signal tone sounds once the pyrolytic self-cleaning function has ended.

✔ The display shows a message.

8. Once the appliance has cooled down, wipe out the ash that has been left behind in the cooking compartment with a damp cloth.
   Depending on the type and degree of soiling, white deposits may remain on the enamel surfaces. These deposits are harmless. They do not affect the function or service life of your appliance.

20 Troubleshooting

You can rectify minor faults on your appliance yourself. Read the troubleshooting information before contacting after-sales service. This will avoid unnecessary costs.

⚠ **WARNING – Risk of injury!**
Improper repairs are dangerous.

- Repairs to the appliance should only be carried out by trained specialist staff.
- If the appliance is defective, call Customer Service.
  → *"Customer Service", Page 56*

⚠ **WARNING – Risk of electric shock!**
Improper repairs are dangerous.

- Repairs to the appliance should only be carried out by trained specialist staff.
- Only use genuine spare parts when repairing the appliance.
- If the power cord or the appliance power cable of this appliance is damaged, it must be replaced with a special power cord or special appliance power cable, which is available from the manufacturer or its Customer Service.
- If the power cord of this appliance is damaged, it must be replaced by trained specialist staff.

20.1 Malfunctions

Fault	Cause and troubleshooting
The appliance is not working.	The mains plug of the power cord is not plugged in. ▸ Connect the appliance to the power supply.
	The circuit breaker in the fuse box has tripped. ▸ Check the circuit breaker in the fuse box.
	There has been a power cut. ▸ Check whether the lighting in your room or other appliances are working.
	Operating error. ▸ Switch off the circuit-breaker for the appliance in the fuse box and switch it back on after approx. 60 seconds.
The appliance does not start.	The appliance door is not fully closed. ▸ Close the appliance door.

Fault	Cause and troubleshooting
The appliance does not work. The display does not respond. The display shows the symbol for the childproof lock 🔒.	Childproof lock is activated. ▸ Deactivate the childproof lock. →*Page 15*
The appliance automatically switches off.	Safety switch-off function: No operation for more than 12 hours. **1.** Press ✔ to confirm the message. **2.** Switch off the appliance.
The appliance does not heat up; the display shows the symbol for demo mode.	The appliance is in demo mode. ▸ Deactivate the demo mode in the basic settings →*Page 24*.
The display shows the error message "Exx".	An error occurred. **1.** If the display shows an error message, turn the function selector to 0. ✔ If the display no longer shows the error message, it was a one-off problem. **2.** If the display continues to show or repeatedly shows the error message, contact customer service →*Page 56* and provide them with the error code.

20.2 Power failure

Your appliance can bridge a power failure of a few seconds. The operation continues.
If the power failure lasts longer and the appliance was operating, the display shows a message. The operation is interrupted.

Switch the appliance back on again after a power failure

1. Turn the function selector to 0.
2. Switch the appliance back on again as usual.

20.3 Demo mode

If the display shows, demo mode is activated. The appliance does not heat up.

Deactivate demo mode

1. To briefly disconnect the appliance from the mains, switch off the household fuse or the circuit breaker in the fuse box.
2. Deactivate demo mode within 3 minutes in the basic settings →*Page 24*.

20.4 Replacing the top oven light bulb

⚠ **WARNING – Risk of burns!**
The appliance and its parts that can be touched become hot during use.
- ▸ Caution should be exercised here in order to avoid touching heating elements.
- ▸ Young children under 8 years of age must be kept away from the appliance.

⚠ **WARNING – Risk of electric shock!**
When changing the bulb, the bulb socket contacts are live.
- ▸ Before replacing the bulb, ensure that the appliance is switched off in order to prevent a potential electric shock.
- ▸ Also unplug the appliance from the mains or switch off the fuse in the fuse box.

Note: Heat-resistant, 230 V, 60-watt, G9 halogen bulbs are available from customer service or specialist retailers. Only use these bulbs. Hold the new halogen bulbs only with a clean, dry towel. This increases the service life of the bulb.

Requirements
- The appliance is disconnected from the power supply.
- The cooking compartment has cooled down.
- You have a new halogen bulb to replace the old one.

1. Place a tea towel in the cooking compartment to prevent damage.
2. Undo the screw on the lamp cover.
✔ The lamp cover hinges down.
3. Pull out the halogen bulb.
4. Insert the new halogen bulb and press it firmly into the socket.
5. Hinge up the lamp cover and screw tightly.
6. Remove the tea towel from the cooking compartment.
7. Connect the appliance to the power supply.

20.5 Replacing the side oven light bulb

⚠ **WARNING – Risk of burns!**
The appliance and its parts that can be touched become hot during use.
- ▸ Caution should be exercised here in order to avoid touching heating elements.
- ▸ Young children under 8 years of age must be kept away from the appliance.

⚠ **WARNING – Risk of electric shock!**
When changing the bulb, the bulb socket contacts are live.
- ▸ Before replacing the bulb, ensure that the appliance is switched off in order to prevent a potential electric shock.
- ▸ Also unplug the appliance from the mains or switch off the fuse in the fuse box.

Note: Heat-resistant, 12 V, 10-watt, G4 halogen bulbs are available from customer service or specialist retailers. Only use these bulbs. Hold the new halogen bulbs only with a clean, dry towel. This increases the service life of the bulb.

Requirements
- The appliance is disconnected from the power supply.
- The cooking compartment has cooled down.

- You have a new halogen bulb to replace the old one.

1. Place a tea towel in the cooking compartment to prevent damage.
2. Undo the knurled nuts.

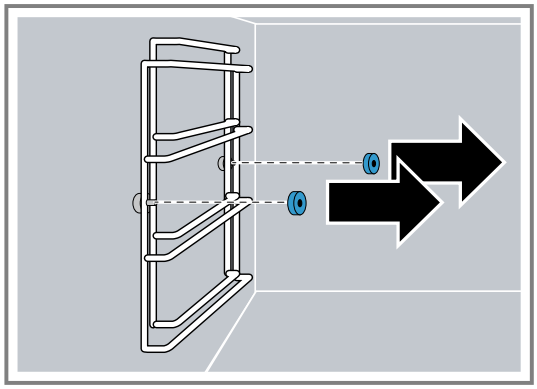

3. Lift the shelf supports slightly sideways away from the screw ① and pull them out towards the front ②.

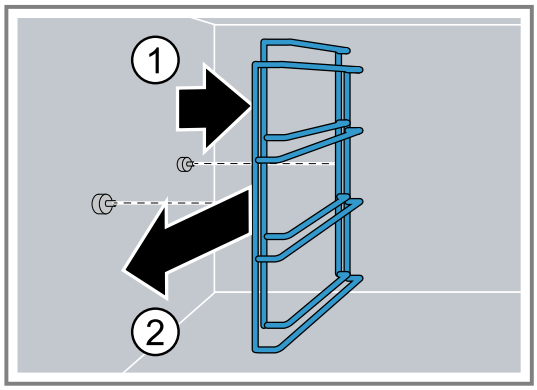

4. Push the upper retaining carrier to the side.
5. Remove the bulb cover.
6. Pull out the halogen bulb.
7. Insert the new halogen bulb and press it firmly into the socket.
8. Align the sloped side of the lamp cover with the cooking compartment, insert the bottom of the lamp cover into the retaining spring and clip it into place at the top.
9. Fit the shelf supports →*Page 28*.
10. Remove the tea towel from the cooking compartment.
11. Connect the appliance to the power supply.

20.6 Replacing the upper lamp cover

If the bulb cover in the cooking compartment is damaged, replace the bulb cover. You can purchase the lamp cover from customer service by specifying the E number and FD number of your appliance.

Requirements

- The appliance is disconnected from the power supply.
- The cooking compartment has cooled down.

1. Place a tea towel in the cooking compartment to prevent damage.
2. Undo the screw on the lamp cover.

✔ The lamp cover hinges down.

3. Hinge up the new lamp cover and screw tightly.
4. Remove the tea towel from the cooking compartment.
5. Connect the appliance to the power supply.

20.7 Replacing the side lamp cover

If the bulb cover in the cooking compartment is damaged, replace the bulb cover. You can purchase the lamp cover from customer service by specifying the E number and FD number of your appliance.

Requirements

- The appliance is disconnected from the power supply.
- The cooking compartment has cooled down.

1. Place a tea towel in the cooking compartment to prevent damage.
2. Undo the knurled nuts.

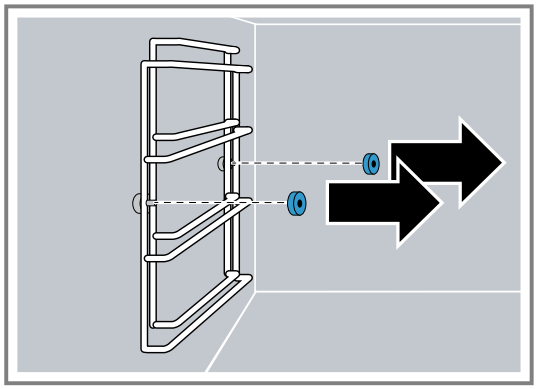

3. Lift the shelf supports slightly sideways away from the screw ① and pull them out towards the front ②.

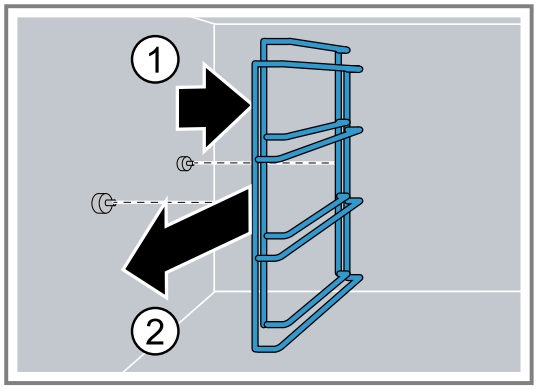

4. Push the upper retaining carrier to the side.
5. Remove the bulb cover.
6. Align the sloped side of the lamp cover with the cooking compartment, insert the bottom of the lamp cover into the retaining spring and clip it into place at the top.
7. Fit the shelf supports →*Page 28*.
8. Remove the tea towel from the cooking compartment.
9. Connect the appliance to the power supply.

21 Disposal

21.1 Disposing of old appliance

Valuable raw materials can be reused by recycling.

1. Unplug the appliance from the mains.
2. Cut through the power cord.
3. Dispose of the appliance in an environmentally friendly manner.
   Information about current disposal methods are available from your specialist dealer or local authority.

This appliance is labelled in accordance with European Directive 2012/19/EU concerning used electrical and electronic appliances (waste electrical and electronic equipment - WEEE).
The guideline determines the framework for the return and recycling of used appliances as applicable throughout the EU.

22 How it works

Here, you can find the ideal settings for various types of food as well as the best accessories and cookware. We have perfectly tailored these recommendations to your appliance.

22.1 General cooking tips

Take note of the following information when cooking all types of food.

- Always preheat the appliance. This will produce the best cooking results. The cooking times specified refer to a preheated appliance.
- The cooking times specified are intended as a guide. The actual cooking time depends on the quality and temperature of the food before cooking, as well as its weight and thickness.
- If you have not made a particular dish before, start with the shortest specified time. If required, you can continue to cook the food.
- A lower temperature results in more even browning. If necessary, set a higher temperature.
- The values given refer to average quantities for 4 people. If you want to prepare a larger amount, expect a longer cooking time.
- Use the cookware specified. If you use other cookware, the cooking time may be longer or shorter.
- You can use any heat-resistant cookware. Place the cookware in the centre of the wire rack. For large roasts, you can also use the grill tray or glass tray.
- To ensure optimal heat circulation, do not position the wire racks and baking trays too closely.
- To prepare bulky food items, you can remove the side slide-in rack.
- Place the rack directly onto the bottom of the cooking compartment and place the food or roaster onto the rack. Do not place the food or roaster directly onto the bottom of the cooking compartment.
- Open the cooking compartment door on the preheated oven for a short time only and quickly place your food inside the appliance.
- Always use plates, baking tins or ovenproof dishes with the wire rack.
- Eco hot air:
  Energy-saving hot air mode for cakes, meat, bakes and gratins. Optimal use is made of the residual heat. Convenience functions remain switched off (e.g. the interior lighting). The interior temperature can only be displayed while the appliance is heating up. Do not preheat the oven. Make sure that the cooking compartment is cold and that there is nothing already in there when you place the food inside. Then start the specified cooking time. Always keep the appliance door closed when cooking. This prevents heat loss.
- Full surface grill and Full surface grill + air recirculation:
  With these operating modes, there may be a temperature difference between the temperature you have set and the actual temperature inside the oven. This is because grilling and browning are fast cooking processes that require high temperatures. Consequently, for browning and roasting, a higher temperature than is actually needed on the surface of the food is selected.

22.2 Vegetables

Take note of the recommended settings for vegetables.

- Oven-roasted or oven-baked vegetables are a good alternative to pan-fried vegetables. The different flavours become more concentrated and, because the vegetables are roasted, they have a very distinctive taste. In addition, very little fat is required to prepare the vegetables.
- Clean and prepare the vegetables and mix them with a little oil in a bowl. Place them in a heat-resistant dish or in the glass tray or grill tray and spread them out evenly.
- Mix them thoroughly at least once during the cooking process. Once they are cooked, season them and sprinkle them with fresh herbs to taste.
- Vegetables are good as a hot or cold starter or vegetarian main course, or as an accompaniment to meat and fish.
- For small portions (for 2-3 people), use a heat-resistant dish and place it on the wire rack. If you use the glass tray or grill tray, the food will start to burn or dry out.
- Always follow the manufacturer's instructions for precooked and frozen products, too.

Vegetables

Food	Accessory/ cookware	Level	Temperature in °C	Type of heating	Cooking time in mins	Comments
Antipasti	Glass tray or Grill tray	3 (4)	200	✤	30 [1]	Recipe tip: Drizzle balsamic vinegar over the vegetables whilst they are still hot, and season them.
Antipasti	Glass tray or Grill tray	3 (4)	250	∿∿∿	15-20 [1]	Recipe tip: Drizzle balsamic vinegar over the vegetables whilst they are still hot, and season them.
Chicory	Ovenproof dish	2 (3)	180	✤	25-30	Recipe tip: Halve, season, wrap in boiled ham, pour cream sauce or béchamel sauce over the top and sprinkle with cheese.
Chicory	Ovenproof dish	2 (3)	190	✤ᵉ	45-50	Recipe tip: Halve, season, wrap in boiled ham, pour cream sauce or béchamel sauce over the top and sprinkle with cheese. Do not preheat with ✤ᵉ; do not open the appliance door.
Escalivada, Mediterranean oven-roasted vegetables	Ovenproof dish	4 (5)	250	∿∿∿	15 [1]	Recipe tip: Aubergines, onions, tomatoes, peppers, oil. Delicious hot or cold.
Vegetable bake	Ovenproof dish	2 (3)	180	✤	40-50	Pre-cook or blanch vegetables and other ingredients.
Veggie burgers, frozen	Baking tray + greaseproof paper	2 (3)	220	✤	12-15 [1]	
Vegetable skewers	Wire rack + grill tray	3 (4)	220	∿∿∿	24 [1]	Shorten the wooden skewers or leave them to soak in water overnight to prevent them from charring. Recipe tip: Peppers, onions, sweetcorn (pre-cooked), cherry tomatoes, courgette.
Sliced pumpkin	Glass tray or Grill tray	3 (4)	200	✤	20-30 [1]	Recipe tip: Season with oil, garlic, ginger, cumin, salt and pepper.
Oven-roasted tomatoes	Ovenproof dish	2 (3)	120	✤	60	Recipe tip: Place cherry tomatoes or sliced tomatoes, rosemary and garlic into the baking dish and drizzle with oil and a little honey. If you wish, you can blanch the tomatoes and skin them before roasting them in the oven.
Peppers, stuffed, vegetarian	Ovenproof dish or Roaster	2 (3)	190	--- ---	50	Recipe tip: Stuff with boiled rice, soft wheat or lentils and onions, cheese, herbs and seasoning/ spices.
Ratatouille	Glass tray or Grill tray	3 (4)	200	--- ---	30-40 [1]	Recipe tip: Sprinkle with parmesan just before serving.
Asparagus, green, grilled	Glass tray or Grill tray	3 (4)	220	∿∿∿	6-10 [1]	Recipe tip: Season with onions, oil, vinegar, salt and pepper.

[1] Turn the food halfway through cooking.

Food	Accessory/ cookware	Level	Temperature in °C	Type of heating	Cooking time in mins	Comments
						Adjust the cooking time depending on size.
Root vegetables	Glass tray or Grill tray	3 (4)	200		30 [1]	Recipe tip: Season carrots, celery, swede and beetroot with oil, garlic, salt and pepper.
Root vegetables	Glass tray or Grill tray	3 (4)	250		15-20 [1]	Recipe tip: Season carrots, celery, swede and beetroot with oil, garlic, salt and pepper.
Courgettes, stuffed, vegetarian	Glass tray or Grill tray	2 (3)	180		40	Recipe tip: Stuff with grated carrot, spring onion, goats' cheese, garlic, thyme, salt and pepper and sprinkle with parmesan.

22.3 Side dishes and meals

Take note of the recommended settings for side dishes and meals.

- The best known oven-cooked side dishes are potato-based, such as potato gratin. However, you can also achieve excellent results when oven-cooking side dishes that are normally pan-fried, e.g. potato fritters and fried potatoes. The advantages of this preparation method: You can prepare relatively large quantities of food at the same time, the cooking smells do not spread so far in the room, and the food can be prepared using less fat.
- Another highly versatile oven-cooked side dish is cheese. It is a very good addition to vegetarian dishes in particular; depending on the preparation method, you can also serve cheese as a starter or finger food.
- Grilled dishes such as bakes and gratins are particularly well suited to being prepared in the oven. Dishes with a dough or pastry base, e.g. pizza and savoury flan, and egg dishes with a filling, e.g. tortilla, are also suitable.
- For small portions (for 2-3 people), use a heat-resistant dish and place it on the wire rack. If you use the glass tray or grill tray, the food will start to burn or dry out.
- Always follow the manufacturer's instructions for pre-cooked and frozen products, too.

Side dishes and meals

Food	Accessory/cookware	Level	Temperature in °C	Type of heating	Cooking time in mins	Comments
Side dishes						
Baking Camembert, breaded, fresh	Baking tray + greaseproof paper	2 (3)	180		15-20	Bake until the breadcrumb coating rises in the centre.
Baking Camembert, breaded, frozen	Baking tray + greaseproof paper	2 (3)	180		15-20	Bake until the breadcrumb coating rises in the centre.
Baking Camembert, breaded, frozen	Baking tray + greaseproof paper	2 (3)	200		15	Bake until the breadcrumb coating rises in the centre.
Roast potatoes	Grill tray	2 (3)	180		30-45 [1]	Low-fat cooking. Spread evenly across the grill tray and mix thoroughly several times.
Feta	Baking tray	2 (3)	250		12	Recipe tip: Place in a baking dish with oil, tomatoes, onions, garlic and rosemary and season with salt and pepper.
Potato wedges	Baking tray + greaseproof paper	2 (3)	200		15 [1]	Recipe tip: Chop the potatoes and season them with olive oil, paprika and salt.
Potato gratin	Ovenproof dish	2 (3)	180		35	

[1] Turn the food halfway through cooking.

Food	Accessory/cookware	Level	Temperature in °C	Type of heating	Cooking time in mins	Comments
Potato gratin	Ovenproof dish	2 (3)	190	✤e	55-60	Do not preheat with ✤e; do not open the appliance door.
Potatoes on a bed of coarse salt	Ovenproof dish	2 (3)	200	⎓	40-60 [1]	Fill the ovenproof dish with 1.5 cm of sea salt. Place small potatoes into the dish with their skins on and brush them with olive oil.
Potato fritters	Baking tray	2 (3)	175	✤	20-30 [1]	Oil the baking tray liberally, squeeze out the excess liquid from the potato fritter mixture and brush with a little oil. Turn once.
Potato fritters	Baking tray	2 (3)	200	⎓	20-30 [1]	Oil the baking tray liberally, squeeze out the excess liquid from the potato fritter mixture and brush with a little oil. Turn once.
Mozzarella sticks, frozen	Baking tray + greaseproof paper	2 (3)	180	✤	10	
Oven-baked cheese, fresh	Baking tray	2 (3)	180	✤	20	After 10 minutes, cut a cross into the soft cheese and break open. If possible, the baking dish should be not much larger than the cheese so that the cheese does not run.
Chips, fresh	Baking tray + greaseproof paper	3 (4)	200	✤	15-20 [1]	Recipe tip: Cover with a little oil; season with salt and paprika or curry powder after cooking.
Chips, frozen	Baking tray + greaseproof paper	3 (4)	220	✤	14 [1]	Spread out frozen chips well on the baking tray.
Goats' cheese wrapped in bacon	Glass tray or Baking tray	2 (3)	220	✤	8-10	Either goats' cheese or goats' camembert can be used.
Goats' cheese wrapped in bacon	Glass tray or Baking tray	3 (4)	220	∿∿∿	8-10	Either goats' cheese or goats' camembert can be used.
Goats' cheese with honey	Glass tray or Baking tray	2 (3)	200	✤	8	Recipe tip: Drizzle lavender honey over the goats' cheese or goats' camembert and sprinkle with pine nuts.
Goats' cheese with honey	Glass tray or Baking tray	3 (4)	200	∿∿∿	8	Recipe tip: Drizzle lavender honey over the goats' cheese or goats' camembert and sprinkle with pine nuts.
Meals						
American pizza, deep-pan, frozen	Baking tray	2 (3)	200	⎓	20-24	No need to preheat. If the appliance has been preheated, reduce the cooking time by 4 minutes.
Farmer's omelette	Ovenproof dish	2 (3)	160	✤	40	Recipe tip: With green and white asparagus; also with gravlax.
Enchiladas, au gratin	Glass tray or Grill tray	2 (3)	200	⎓	15-20	

[1] Turn the food halfway through cooking.

Food	Accessory/cookware	Level	Temperature in °C	Type of heating	Cooking time in mins	Comments
Tarte flambée, fresh	Baking tray	2 (3)	250	___	8-10	Recipe tip: Traditional or with goats' cheese, Parma ham, figs and spring onion.
Tarte flambée, frozen	Wire rack	2 (3)	200	✤	10-12	
Tarte flambée, frozen	Wire rack	2 (3)	230	___	8-10	
Tarte flambée, pre-baked	Baking tray + greaseproof paper	2 (3)	250	✤	7	
Frittata	Ovenproof dish	2 (3)	190	___	45-50	Recipe tip: With spinach, onion and prawns.
Spring rolls, frozen	Baking tray + greaseproof paper	2 (3)	225	✤	18-20 [1]	
Macaroni cheese	Ovenproof dish	2 (3)	180/220	✤	10-20	To obtain a crust on the cheese, increase the temperature to 220 °C after 10 minutes and leave to brown for a further 10 minutes.
Cheese spätzle (Swabian noodle dish)	Ovenproof dish	2 (3)	180/220	✤	30	Gradually layer the freshly cooked spätzle in the baking dish, sprinkling each layer with cheese. Then top the dish with cheese and roasted onion, raise the temperature to 220 °C and cook for 5 minutes.
Lasagne	Ovenproof dish	2 (3)	175	✤	35	Recipe tip: Traditional or vegetarian with grilled vegetables and buffalo mozzarella.
Lasagne	Ovenproof dish	2 (3)	180-190	✤e	55-60	Recipe tip: Traditional or vegetarian with grilled vegetables and buffalo mozzarella. Do not preheat with ✤e; do not open the appliance door.
Mini spring rolls, frozen	Baking tray + greaseproof paper	2 (3)	225	✤	10 [1]	
Pizza, fresh	Baking tray	2 (3)	230-250	___	10-15	Lightly grease the baking tray or line it with greaseproof paper.
Pizza, frozen	Wire rack	2 (3)	200	✤	11-13	
Pizza, frozen	Wire rack	2 (3)	220	___	11-13	
Pizza, pre-baked	Baking tray + greaseproof paper	2 (3)	230	✤	6-8	
Pizza, pre-baked	Baking tray + greaseproof paper	2 (3)	230	___	6-8	
Quiche	Tart dish or tin	2 (3)	200	___	20 + 20	Prick the base several times with a fork and pre-bake for 20 minutes. Pour the mixture onto the base and then bake for a further 20 minutes.
Tortilla	Ovenproof dish	2 (3)	160	___	25	Recipe tip: With peppers, olives, onion, Serrano ham and Manchego cheese.

[1] Turn the food halfway through cooking.

Food	Accessory/cookware	Level	Temperature in °C	Type of heating	Cooking time in mins	Comments
Onion tart	Baking tray	2 (3)	200	--- ---	30-40	Prick the base several times with a fork.

22.4 Fish

Take note of the recommended settings for fish.

- For food hygiene reasons, ensure that fish has a core temperature of at least 62-70 °C after cooking. This is also the ideal cooking temperature.
- Do not season the fish with salt until it is fully cooked. This ensures that the natural flavour is maintained and that less water is drawn out of the fish.
- Use a small amount of oil to grease the wire rack or baking tray so that the fish does not stick to it.
- For fillets with skin: Place the fish on the rack or tray with the skin side up – this helps to hold the fish together and maintain its flavour.
- Shorten the wooden skewers or, before skewering the ingredients, leave the skewers to soak in water overnight to prevent them from charring.
- Always follow the manufacturer's instructions for pre-cooked and frozen products, too.

Fish

Food	Accessory/ cookware	Level	Temperature in °C	Type of heating	Cooking time in mins	Comments
Sea bream, whole	Wire rack + grill tray	3 (4)	200-220	∿∿∿	20-25 [1]	Recipe tip: Stuff with lemon, garlic and thyme, or use mint for a summery touch. Make a diagonal incision into the skin of the sea bream.
Sea bream, whole	Baking tray	3 (4)	190	✣	20-25 [1]	Recipe tip: Stuff with lemon, garlic and thyme, or use mint for a summery touch. Make a diagonal incision into the skin of the sea bream.
Fish kebabs	Wire rack + grill tray	3 (4)	200	∿∿∿	12 [1]	Use firm types of fish, e.g. salmon, coley, ocean perch and cod.
Fish fingers, frozen	Baking tray + greaseproof paper	2 (3)	220	✣	15-17 [1]	
Trout, whole	Baking tray	3 (4)	200-220	∿∿∿	16 [1]	Recipe tip: Stuff with lemon, garlic and parsley.
Prawn skewers, fresh	Wire rack + grill tray	3 (4)	180	∿∿∿	10 [1]	
Prawn skewers, frozen	Wire rack + grill tray	3 (4)	180	∿∿∿	12 [1]	
Salmon steak	Wire rack + grill tray	3 (4)	250	∿∿∿ ✣	10-12	Recipe tip: Marinate in a mixture of sweet lime, salt, pepper and garlic.
Salmon steak	Baking tray	2 (3)	200	✣	10-12	Recipe tip: Marinate in a mixture of sweet lime, salt, pepper and garlic.
Tuna steak	Baking tray	2 (3)	200	✣	8-10	Recipe tip: Season Asian-style with soy sauce, sesame oil, ginger, honey, garlic, chilli and coriander seeds.
Calamari rings, frozen	Baking tray + greaseproof paper	2 (3)	220	--- ---	8-12	

22.5 Meat

Take note of the recommended settings for meat.

- The cooking times listed are intended as a guide only and depend heavily on the temperature of the meat at the start of cooking and on how long the meat was

[1] Turn the food halfway through cooking.

seared for. Use the core temperature probe so that you can monitor the core temperature more easily. Information and instructions, as well as optimal target temperatures, can be found in the section entitled Core temperature probe →*Page 20*.

- Time to rest: Allow the meat to rest for 5-15 minutes on a wire rack after cooking. This gives the meat a chance to "relax". The circulation of the meat juice slows and, when the meat is cut, less juice is lost. Large pieces of meat, e.g. joints, can be left to rest in the oven. Smaller pieces of meat, e.g. steaks, should be wrapped in aluminium foil and left to rest outside the oven.
- For small portions (2–3 people), it is a good idea to use a heat-resistant baking dish or tin so that the food does not begin to burn or dry out.
- Use the grill tray or roaster for a large joint of meat and for preparation methods that involve adding a lot of liquid to the joint.
- For best results, leave meat to marinate overnight and remove the marinade before roasting or grilling, e.g. using the back of a knife or a spoon. Otherwise, the herbs and spices will burn.
- If the joint of meat has become too dark in colour and the skin is burnt in places, reduce the set temperature the next time you cook a joint and check the shelf level.
- If the joint is cooked but the sauce is slightly burnt, use a smaller roaster the next time you cook a joint and add more liquid. If the sauce is too watery, use a larger roaster and add less liquid.

Meat

Food	Accessory/ cookware	Level	Temperature in °C	Type of heating	Cooking time in mins	Comments
Beef						
Beef joint, 1.5 kg	Glass tray or Grill tray	2 (3)	180		90-120 [1]	
Roast beef, sirloin, rare, 1 kg	Glass tray or Grill tray	2 (3)	230/180		25-35 [2]	Recipe tip: Delicious with Béarnaise sauce or cold cut with remoulade and roast potatoes.
Roast beef, sirloin, well done, 1 kg	Glass tray or Grill tray	2 (3)	230/180		50-60 [2]	Recipe tip: Delicious with Béarnaise sauce or cold cut with remoulade and roast potatoes.
Roast beef, sirloin, medium rare, 1 kg	Glass tray or Grill tray	2 (3)	230/180		35-45 [2]	Recipe tip: Delicious with Béarnaise sauce or cold cut with remoulade and roast potatoes.
Rump steak, medium rare, 500 g	Glass tray or Grill tray	2 (3)	200		30	Core temperature 65 °C
Rump steak, medium rare, 500 g	Glass tray or Grill tray	2 (3)	200	e	45	Core temperature 65 °C Do not preheat with e; do not open the appliance door.
Pork						
Smoked pork, 1 kg	Glass tray or Grill tray	2 (3)	180/160		50-60 [2]	
Roast pork with crackling, joint of pork with crispy skin, well done, 1.5 kg	Wire rack + grill tray	2 (3)	180/200		60-70 [3]	Score the skin diagonally in both directions so that it is cross-hatched. This makes it nice and crispy. Before cooking, boil the joint in water for 10 minutes with the skin on.
Rolled roasting joint	Glass tray or grill tray or Wire rack + grill tray	2 (3)	180/230		65-70 [3]	

[1] Sear on all sides in a frying pan on the hob first.
[2] Sear meat at a high temperature; set the lower temperature after 15-20 minutes.
[3] Cook meat at a low temperature; set it to cook at the higher temperature for the last 15-20 minutes.

Food	Accessory/ cookware	Level	Temper-ature in °C	Type of heating	Cooking time in mins	Comments
Rolled roasting joint	Glass tray or grill tray or Wire rack + grill tray	2 (3)	180/230		75-80 [1]	
Joint of pork, leg, 1 kg	Glass tray or Grill tray	2 (3)	230/180		45-50 [2]	Score the skin diagonally in both directions so that it is cross-hatched. This makes it nice and crispy.
Joint of pork, neck, 1.5 kg	Glass tray or Grill tray	2 (3)	230/180		85-95 [2]	
Joint of pork, neck, 1.5 kg	Glass tray or Grill tray	2 (3)	230/180		70-80 [2]	
Fillet of pork, 250 g	Glass tray or Grill tray	2 (3)	180		30	Core temperature 70 °C.
Fillet of pork, 250 g	Glass tray or Grill tray	2 (3)	180		40-45	Core temperature 70 °C. Do not preheat with ; do not open the appliance door.
Fillet of pork, whole, 400 g	Glass tray or Grill tray	2 (3)	230/180		20-25 [2]	Recipe tip: Marinate in a mixture of oil, garlic and parsley.
Pork medallions	Glass tray or Grill tray	2 (3)	210		12-15 [3]	Recipe tip: Just before you take them out the oven, add a knob of butter and a sprig of rosemary to the glass tray or grill tray and cook all together for a little longer in the appliance.
Knuckle of pork	Wire rack + grill tray	2 (3)	150/200		40-45 [1]	Score the skin diagonally in both directions so that it is cross-hatched. This makes it nice and crispy. Before cooking, boil the joint in water for 90 minutes with the skin on.
Veal						
Joint of veal, 1.5 kg	Glass tray, Grill tray or Roaster	2 (3)	180/230		50-60 [1]	
Breast of veal, stuffed	Glass tray, Grill tray or Roaster	2 (3)	120-130		120	
Veal knuckle	Glass tray, Grill tray or Roaster	2 (3)	150/180		50-60 [1]	
Veal loin	Glass tray, Grill tray or	2 (3)	160-170		20	

[1] Cook meat at a low temperature; set it to cook at the higher temperature for the last 15-20 minutes.
[2] Sear meat at a high temperature; set the lower temperature after 15-20 minutes.
[3] Sear on all sides in a frying pan on the hob first.

Food	Accessory/ cookware	Level	Temperature in °C	Type of heating	Cooking time in mins	Comments
	Roaster					
Game						
Saddle of rabbit	Glass tray, Grill tray or Roaster	2 (3)	180	✤	15-25 [1]	Recipe tip: Marinate in a mixture of garlic, rosemary, olive oil and high-quality balsamic vinegar.
Knuckle of lamb	Glass tray, Grill tray or Roaster	2 (3)	180-200	✤	35-45	
Leg of lamb, medium rare	Glass tray, Grill tray or Roaster	2 (3)	180-190	✤	100 [1]	Recipe tip: Marinate overnight in a mixture of olive oil, garlic, rosemary and sliced lemon.
Leg of lamb, well done	Glass tray, Grill tray or Roaster	2 (3)	180-190	✤	120 [1]	Recipe tip: Marinate overnight in a mixture of olive oil, garlic, rosemary and sliced lemon.
Leg of roe venison	Glass tray, Grill tray or Roaster	2 (3)	170-180	✤	60-80	
Saddle of venison	Glass tray, Grill tray or Roaster	2 (3)	165-175	✤	20	
Saddle of venison	Glass tray, Grill tray or Roaster	2 (3)	165-175	--- ---	20-25	
Wild boar joint	Glass tray, Grill tray or Roaster	2 (3)	170	✤	60-90 [1]	Recipe tip: Marinate overnight in a mixture of oil, garlic, mustard and herbes de Provence.
Miscellaneous						
Rashers of bacon, oven-cooked bacon, thick	Baking tray + greaseproof paper	3 (4)	190	✤	8-12	
Rashers of bacon, oven-cooked bacon, thin	Baking tray + greaseproof paper	3 (4)	180	✤	8-10	Once you have taken the bacon out of the appliance, place it on some kitchen towel to soak up the fat.
Meatloaf, fresh, 700 g	Wire rack + grill tray	2 (3)	160	✤	60	Use a core temperature probe (core temperature 67 °C).
Meatballs, 25 g each	Baking tray + greaseproof paper	2 (3)	200	✤	25-30	Recipe tip: Easy to make into a meal, e.g. meatballs with tomato sauce, Swedish meatballs and Königsberger Klopse (Prussian meatballs in a white sauce with capers).
Meatballs, 80 g each	Baking tray + greaseproof paper	2 (3)	200	✤	30-35	The flatter the meatballs, the faster they cook. Easy to make in large quantities.

[1] Sear on all sides in a frying pan on the hob first.

Food	Accessory/ cookware	Level	Temperature in °C	Type of heating	Cooking time in mins	Comments
Meatballs, lightly fried, 25 g each	Baking tray + greaseproof paper	2 (3)	200		15	Recipe tip: Place meatballs made from minced lamb or rabbit on skewers and serve with mint yoghurt or fig mustard.
Meatballs, lightly fried, 80 g each	Baking tray + greaseproof paper	2 (3)	200		20	For nicely browned yet juicy meatballs, fry them lightly in the frying pan first before continuing to cook them in the appliance.
Peppers, stuffed, with minced meat	Ovenproof dish or Roaster	2 (3)	190		55-60	Recipe tip: Stuff with minced meat and cook in tomato sauce.

22.6 Poultry

Take note of the recommended settings for poultry.

- The cooking times listed are intended as a guide only and depend heavily on the temperature of the meat at the start of cooking. Use the core temperature probe so that you can monitor the core temperature more easily. Insert the core temperature probe between the belly and the thigh, rather than in the middle or in a cavity. Further information and instructions, as well as optimal target temperatures, can be found in the section entitled Core temperature probe →*Page 20*.
- Poultry will turn out particularly crispy and brown if you baste it towards the end of the roasting time with butter, salted water, drained fat or orange juice.
- When cooking duck or goose, pierce the skin underneath the wings to allow the fat to run out.
- Use a roaster or another heat-resistant baking dish or tin for dishes that involve adding a lot of liquid to the roast. The same applies if a lot of fat is likely to drain from the food, e.g. roast goose.

Poultry

Food	Accessory/ cookware	Level	Temperature in °C	Type of heating	Cooking time in mins	Comments
Duck, whole, 1.5-2 kg	Wire rack + grill tray or Roaster	2 (3)	160/180		75 [1]	Recipe tip: Stuff with oranges, apples or dried fruit.
Duck breast	Roaster or Ovenproof dish	2 (3)	190		25-35	Score the skin diagonally in both directions so that it is cross-hatched.
Goose, whole, 5 kg	Wire rack + grill tray or Roaster	2 (3)	160/190		110-130 [1]	Recipe tip: Stuff with apples, onions and marjoram and pin the opening closed with a cocktail stick or similar sharp item.
Goose, whole, 5 kg	Wire rack + grill tray or Roaster	2 (3)	160/190		110-130 [1]	Recipe tip: Stuff with apples, onions and marjoram and pin the opening closed with a cocktail stick or similar sharp item.
Chicken nuggets, frozen	Baking tray + greaseproof paper	2 (3)	200		15 [2]	
Chicken, whole, 1 kg, in accordance with EN60350-1	Wire rack + grill tray	2 (3)	190		70-80	Preheat.
Chicken, whole, 1 kg, in accordance with EN60350-1	Wire rack + grill tray	2 (3)	190		70-80	Preheat.

[1] Cook meat at a low temperature; set it to cook at the higher temperature for the last 15-20 minutes.
[2] Turn the food halfway through cooking.

Food	Accessory/ cookware	Level	Temperature in °C	Type of heating	Cooking time in mins	Comments
Chicken breast	Wire rack + grill tray	2 (3)	200		20-25	Recipe tip: Rub with tandoori paste before cooking.
Chicken breast	Wire rack + grill tray	2 (3)	200		50	Recipe tip: Rub with tandoori paste before cooking. No need to preheat; do not open appliance door.
Chicken legs	Wire rack + grill tray	3 (4)	220		30 [1]	After the leg is turned, the side with more skin should be at the top. This makes it nice and crispy. Marinate in a mixture of oil, rosemary, sliced lemon and garlic.
Chicken legs	Wire rack + grill tray	3 (4)	220		30 [1]	After the leg is turned, the side with more skin should be at the top. This makes it nice and crispy. Marinate in a mixture of oil, rosemary, sliced lemon and garlic.
Chicken drumsticks	Wire rack + grill tray	3 (4)	220		30 [1]	Recipe tip: Asian marinade with soy sauce, honey, chilli, garlic, ginger, cumin, sweet lime zest and coriander.
Chicken drumsticks	Wire rack + grill tray	3 (4)	220		30 [1]	Recipe tip: Asian marinade with soy sauce, honey, chilli, garlic, ginger, cumin, sweet lime zest and coriander.
Turkey, whole	Wire rack + grill tray or Roaster	2 (3)	160/200		120-180 [2]	
Turkey, whole	Wire rack + grill tray or Roaster	2 (3)	160/200		120-180 [2]	
Quail, whole, 150 g each	Wire rack + grill tray	3 (4)	200		20-25	Baste with oil and seasoning/ spices, e.g. paprika, thyme, juniper and garlic.
Quail breast	Baking tray	3 (4)	220		10-12	Baste with oil and seasoning/ spices, e.g. paprika, thyme, juniper and garlic.

22.7 Grilling and roasting

Note the recommended settings for grilling and roasting.

- Do not grill food with the oven door open.
- For grilling, use the grill tray with the wire insert (depending on the model, this may be an accessory or a special accessory). Pour approximately 100 ml water into the grill tray; this will catch the meat juices so that the oven stays clean. If you pour in too much water, this may alter the cooking result because too much steam will be produced.
- The pieces of food to be grilled should be of roughly the same thickness (at least 2-3 cm). This will allow them to brown evenly and remain succulent and juicy. Never add salt to meat before grilling it. Place the food to be grilled directly on the wire rack.
- If you use wooden skewers, they may char. To prevent this, shorten them as far as possible, leave them to soak in water overnight before skewering the ingredients or use metal skewers.
- For small quantities, use the energy-saving "Compact grill" type of heating. With this type of heating, only the centre part of the grill is heated. Place the food to be grilled in the centre of the wire rack.

[1] Turn the food halfway through cooking.
[2] Cook meat at a low temperature; set it to cook at the higher temperature for the last 15-20 minutes.

Grilling and roasting

Food	Accessory/ cookware	Level	Temperature in °C	Type of heating	Cooking time in mins	Comments
Browning meringue	Springform tin	2 (3)	220-250		4-5 [1]	Stay by the appliance so that the meringue does not brown too much.
Bratwurst (German sausage)	Wire rack + grill tray	3 (4)	270		10 [2]	
Croque monsieur	Baking tray + greaseproof paper	3 (4)	190		8-11 [1]	
Croutons	Baking tray	2 (3)	180		15 [2]	Recipe tip: Mix fresh white bread with olive oil, garlic and rosemary leaves. Avoid using too much oil and wait until you are ready to serve before pouring it on; otherwise, the bread cubes will become saturated. Turn several times.
Halloumi cheese, grilled cheese	Wire rack + grill tray	3 (4)	250		5-8	Halloumi is a semi-hard cheese used in Turkish and Greek cooking. It is excellent grilled.
Merguez sausage	Wire rack + grill tray	3 (4)	250		12 [2]	
Prunes, wrapped in bacon, dried	Baking tray + greaseproof paper	3 (4)	200		8-10	Equally delicious with dates or apricots.
Chicken satay	Wire rack + grill tray	3 (4)	250		10-14 [2]	Serve with peanut sauce.
Shish kebab	Wire rack + grill tray	3 (4)	190		16 [2]	
Pork belly, sliced	Wire rack + grill tray	2 (3)	230		18-20 [2]	
Pork belly, sliced	Wire rack + grill tray	2 (3)	230		18-20 [2]	
Spare ribs, raw	Wire rack + grill tray	3 (4)	220		40 [2]	Recipe tip: Place in a mixture of oil, mustard, balsamic vinegar, honey, garlic, Worcester sauce, tomato purée and Tabasco sauce.
Spare ribs, raw	Wire rack + grill tray	3 (4)	220		30 [2]	Recipe tip: Place in a mixture of oil, mustard, balsamic vinegar, honey, garlic, Worcester sauce, tomato purée and Tabasco sauce.
Spare ribs, precooked	Wire rack + grill tray	3 (4)	200-220		24 [2]	
Spare ribs, precooked	Wire rack + grill tray	3 (4)	200-220		24 [2]	
Toast Hawaii	Baking tray + greaseproof paper	3 (4)	190		8-10 [1]	
Toasting bread, appliance width 60 cm	Wire rack	3	200		2:30-3	Preheat for up to 5 minutes. Stay by the appliance so that the toast does not brown too much. Do not grill food with the oven door open.

[1] Brown to the level you require.
[2] Turn the food halfway through cooking.

Food	Accessory/ cookware	Level	Temperature in °C	Type of heating	Cooking time in mins	Comments
Toasting bread, appliance width 76 cm	Wire rack	4	200	∿∿∿	2-2:30	Preheat for up to 5 minutes. Stay by the appliance so that the toast does not brown too much. Do not grill food with the oven door open.

22.8 Baked items

Note the recommended settings for baked items.

- We recommend using dark-coloured metal baking tins as these absorb heat more effectively. Place the baking tin in the centre of the wire rack.
- If you are baking tray bakes without greaseproof paper, lightly grease the baking tray beforehand.
- Small baked items, e.g. cream puffs, biscuits and puff pastry parcels, can be baked on 2 levels, 1+3.
- If you are baking on more than one level, it is normal for food on baking trays placed in the oven at the same time to be ready at different times. Leave the food on the baking trays lower down in the oven to cook for a little longer, or place them in the appliance earlier next time.
- Before cutting the baked items, leave them to cool on a wire rack.
- If the baked items are too dark on the bottom, place them a level up and select a lower temperature.
  If the baked items are too dark on the top, place them a level down, select a lower temperature and extend the baking time a little.
- If the cake is too dry, set the temperature a little higher. If the cake remains uncooked in the middle, set a lower temperature.
  Baking times cannot be reduced by setting a higher temperature; it is better to set the temperature a little lower.
- If the cake collapses, use less liquid or set the temperature 10 °C lower. Do not open the oven door too soon.
- If the cake only rises in the middle, grease the sides of the baking tin.
- Do not remove the biscuits from the baking tray; place the baking tray back into the hot oven for a short period and remove the biscuits whilst they are still hot.
- If the cake does not come away from the tin when you are trying to turn it out, carefully slide a knife around the sides to loosen it. Turn the cake tin upside down again and cover it several times with a cold, wet cloth. Next time, grease the tin well and sprinkle some bread crumbs into it.
- Always follow the manufacturer's instructions for pre-cooked and frozen products, too.

Baked items

Food	Accessory/ cookware	Level	Temperature in °C	Type of heating	Cooking time in mins	Comments
Cakes						
Apple pie, EN 60350-1, appliance width 60 cm	20 cm springform cake tin	2	160	✤	90-105 [1]	Preheat.
Apple pie, EN 60350-1, appliance width 60 cm	20 cm springform cake tin	1	160	--- ---	90-100 [1]	Preheat.
Apple pie, in accordance with EN 60350-1, appliance width 76 cm	20 cm springform cake tin	3	160	✤	85-100 [1]	Preheat.
Apple pie, in accordance with EN 60350-1, appliance width 76 cm	20 cm springform cake tin	2	160	--- ---	100-110 [1]	Preheat.
Sponge base	Springform tin	2 (3)	150	✤	40-45	Lightly grease the baking tray.
Swiss roll	Baking tray + greaseproof paper	2 (3)	190	✤	6	Turn out whilst still hot onto a piece of greaseproof paper sprinkled with sugar, then roll up.

[1] Deactivate the "Rapid heating" function in the basic settings. → *"Basic settings", Page 24*

Food	Accessory/ cookware	Level	Temperature in °C	Type of heating	Cooking time in mins	Comments
Puff pastry strudel	Baking tray + greaseproof paper	2 (3)	200	✤	20-25	Recipe tip: Fill with custard and cherries or apples.
Tray bakes	Baking tray	2 (3)	165-170	✤	20-30	Lightly grease the baking tray.
Tray bakes	Baking tray	2 (3)	165-170	___ ___	40-50	Lightly grease the baking tray.
Bundt cake, ring cake	Ring cake tin	1 (2)	165	✤	30	Recipe tip: Traditional ring cake or with bacon and walnuts.
Bundt cake, ring cake	Ring cake tin	1 (2)	170	✤e	55	Recipe tip: Traditional ring cake or with bacon and walnuts. Do not preheat with ✤e; do not open the appliance door.
Yeast tray bakes	Baking tray	2 (3)	165	✤	30-35	Recipe tip: Top with plums, figs or onion and ham.
Yeast tray bakes	Baking tray	2 (3)	165	___ ___	30-35	Recipe tip: Top with plums, figs or onion and ham.
Cheesecake	Springform tin	1 (2)	160-165	✤	70-75	
Cheesecake	Springform tin	1 (2)	160-165	___ ___	70-75	
Cheesecake	Springform tin	1 (2)	160-165	✤	85-90	
Cheesecake	Springform tin	1 (2)	160-165	___	80-90	
Cheesecake	Springform tin	1 (2)	160-165	✤	40-45	Cheesecake with half quark filling.
Loaf cake	Loaf tin	2 (3)	160-170	✤	60-65	To ensure even browning, place the tin lengthways in the cooking compartment.
Loaf cake	Loaf tin	2 (3)	160-170	___ ___	55-60	To ensure even browning, place the tin lengthways in the cooking compartment.
Fruit flan with shortcrust pastry	Tart dish or tin	2 (3)	165	✤	40-50	Recipe tip: Top with strawberries or apricots and marzipan.
Fruit flan with shortcrust pastry	Tart dish or tin	2 (3)	170	___ ___	40-50	Recipe tip: Top with strawberries or apricots and marzipan.
Fruit flan with shortcrust pastry	Tart dish or tin	2 (3)	165	✤	45-55	Recipe tip: Top with strawberries or apricots and marzipan.
Sponge cake	Springform tin	2 (3)	160-170	✤	50-60	
Sponge cake	Springform tin	2 (3)	160-170	___ ___	50-60	
Tart	Tart dish or tin	2 (3)	190	✤	30-40	French flan with a shortcrust pastry base, e.g. tarte aux pommes, tarte tatin, tarte au chocolat and tarte au citron.
Tart	Tart dish or tin	2 (3)	190	___ ___	30-40	French flan with a shortcrust pastry base, e.g. tarte aux pommes, tarte tatin, tarte au chocolat and tarte au citron.
Tart	Tart dish or tin	2 (3)	190	✤	40-45	French flan with a shortcrust pastry base, e.g. tarte aux pommes, tarte tatin, tarte au chocolat and tarte au citron.
Tart	Tart dish or tin	2 (3)	190	___	45-50	French flan with a shortcrust pastry base, e.g. tarte aux pommes, tarte tatin, tarte au chocolat and tarte au citron. For light-coloured tart dishes.

Food	Accessory/ cookware	Level	Temperature in °C	Type of heating	Cooking time in mins	Comments
Water sponge cake, in accordance with EN 60350-1, appliance width 60 cm	Springform cake tin, diameter 26 cm.	2	160	✤	22-30 [1]	Preheat.
Water sponge cake, in accordance with EN 60350-1, appliance width 60 cm	Springform cake tin, diameter 26 cm.	2	160	--- ---	20-30 [1]	Preheat.
Water sponge cake, in accordance with EN 60350-1, appliance width 76 cm	Springform cake tin, diameter 26 cm.	3	160	✤	22-30 [1]	Preheat.
Water sponge cake, in accordance with EN 60350-1, appliance width 76 cm	Springform cake tin, diameter 26 cm.	3	160	--- ---	25-30 [1]	Preheat.
Small baked items						
Puff pastry	Baking tray + greaseproof paper	3 (4)	200	✤	15	Recipe tip: With sesame seeds, poppy seeds, icing.
Puff pastry goods	Baking tray + greaseproof paper	2 (3)	200	✤	15-20	
Puff pastry twists	Baking tray + greaseproof paper	3 (4)	200	✤	15	Recipe tip: With cheese, ham, nuts.
Puff pastry parcels, filled	Baking tray + greaseproof paper	3 (4)	200	✤	15	Recipe tip: Fill with ham and cheese or apples and raisins.
Small pastries	Baking tray + greaseproof paper	2 (3)	200	✤	15-20	Recipe tip: With custard, fruit.
Brownies	Baking tray + greaseproof paper	2 (3)	120	✤	60	Cut into squares or rectangles once they are baked. The low temperature means that the brownies will stay gooey in the middle.
Brownies	Baking tray + greaseproof paper	2 (3)	180	✤e	40-45	Do not preheat with ✤e; do not open the appliance door.
Cookies, 20 g each	Baking tray + greaseproof paper	2 (3)	175	✤	12-14	With chocolate, raisins, nuts or lemon.
Breadsticks	Baking tray + greaseproof paper	2 (3)	160	✤	30	Sprinkle with sea salt, rosemary, curry powder, sesame seeds or caraway seeds.

[1] Deactivate the "Rapid heating" function in the basic settings. → *"Basic settings", Page 24*

Food	Accessory/ cookware	Level	Temperature in °C	Type of heating	Cooking time in mins	Comments
Waffle biscuits	Baking tray + greaseproof paper	2 (3)	140	✤	8-10	Shape the waffle biscuits whilst they are still hot, e.g. into ice cream cones or small rolls for dessert.
Muffins	Muffin tray, Paper cases	2 (3)	160	✤	25-30	With chocolate, nuts or raisins.
Muffins	Muffin tray, Paper cases	2 (3)	160	___ ___	25-30	With chocolate, nuts or raisins.
Muffins	Muffin tray, Paper cases	2 (3)	160-165	___ _	25-30	With chocolate, nuts or raisins.
Biscuits, shortbread	Baking tray	2 (3)	160-170	✤	15	
Biscuits, shortbread	Baking tray	2 (3)	160-170	___ ___	18	
Small cakes, in accordance with EN 60350-1, appliance width 60 cm	Baking tray	2	150	✤	25-30 [1]	Preheat.
Small cakes, in accordance with EN 60350-1, appliance width 60 cm	Baking tray + glass tray	3 and 1	150	✤	28-32 [1]	Preheat. Applies to baking on 2 levels.
Small cakes, in accordance with EN 60350-1, appliance width 60 cm	Baking tray	3	160	___ ___	20-25 [1]	Preheat.
Small cakes, in accordance with EN 60350-1, appliance width 76 cm	Baking tray	3	150	✤	26-32 [1]	Preheat.
Small cakes, in accordance with EN 60350-1, appliance width 76 cm	Baking tray + glass tray	4 and 2	150	✤	30-32 [1]	Preheat. Applies to baking on 2 levels.
Small cakes, in accordance with EN 60350-1, appliance width 76 cm	Baking tray	4	160	___ ___	23-24 [1]	Preheat.
Shortbread, in accordance with EN 60350-1, appli-	Baking tray	2	140	✤	35-40 [1]	Preheat.

[1] Deactivate the "Rapid heating" function in the basic settings. → *"Basic settings", Page 24*

Food	Accessory/ cookware	Level	Temperature in °C	Type of heating	Cooking time in mins	Comments
ance width 60 cm						
Shortbread, in accordance with EN 60350-1, appliance width 60 cm	Baking tray + glass tray	3 and 1	140	✤	35-40 [1]	Preheat. Applies to baking on 2 levels.
Shortbread, in accordance with EN 60350-1, appliance width 60 cm	Baking tray	2	140	--- ---	26-30 [1]	Preheat.
Shortbread, in accordance with EN 60350-1, appliance width 76 cm	Baking tray	3	140	✤	30-35 [1]	Preheat.
Shortbread, in accordance with EN 60350-1, appliance width 76 cm	Baking tray + glass tray	4 and 2	140	✤	30-40 [1]	Preheat. Applies to baking on 2 levels.
Shortbread, in accordance with EN 60350-1, appliance width 76 cm	Baking tray	3	140	--- ---	30-35 [1]	Preheat.
Cream puffs, éclairs	Baking tray + greaseproof paper	2 (3)	180	✤	35	Recipe tip: Fill with vanilla custard, chocolate mousse, fruit cream or mocha cream.
Cream puffs, éclairs	Baking tray + greaseproof paper	2 (3)	180	--- ---	40	Recipe tip: Fill with vanilla custard, chocolate mousse, fruit cream or mocha cream.
Cream puffs, éclairs	Baking tray + greaseproof paper	2 (3)	180	✤ ---	35	Recipe tip: Fill with vanilla custard, chocolate mousse, fruit cream or mocha cream.
Bread, bread rolls						
Baguette, prebaked	Baking tray + greaseproof paper	2 (3)	220	--- ---	10-12	
Puff pastry strudel	Baking tray + greaseproof paper	2 (3)	200	✤	20-25	Recipe tip: Fill with sheep's cheese and feta.
Bread in a loaf tin	Loaf tin	2 (3)	175	--- ---	40-45	

[1] Deactivate the "Rapid heating" function in the basic settings. → *"Basic settings", Page 24*

Food	Accessory/ cookware	Level	Temperature in °C	Type of heating	Cooking time in mins	Comments
Bread rolls, fresh, 50 g each	Baking tray + greaseproof paper	2 (3)	250/200	--- ---	15-20 [1]	
Bread rolls, frozen	Baking tray + greaseproof paper	2 (3)	180	✤	10-12	
Bread rolls, frozen	Baking tray + greaseproof paper	2 (3)	200	--- ---	10-12	
Bread rolls, prebaked	Baking tray + greaseproof paper	2 (3)	210	--- ---	8-10	
Bread rolls, prebaked	Baking tray + greaseproof paper	2 (3)	200	✤	8-10	
Ciabatta, prebaked	Baking tray + greaseproof paper	2 (3)	190	--- ---	12-14	
Ciabatta, prebaked	Baking tray + greaseproof paper	2 (3)	180	✤	12-14	
Croissants, frozen	Baking tray + greaseproof paper	2 (3)	170	--- ---	15-25	
Flatbread	Baking tray + greaseproof paper	2 (3)	200	✤	15-20	The cooking time depends on the size and thickness of the flatbread.
Flatbread	Baking tray + greaseproof paper	2 (3)	210	--- ---	15-20	The cooking time depends on the size and thickness of the flatbread.
Foccacia	Baking tray + greaseproof paper	2 (3)	210	--- ---	15-20	Top with various ingredients, e.g. herbs, sea salt, olives, anchovies, onion, ham, tomatoes or cheese.
Plaited loaf	Baking tray + greaseproof paper	2 (3)	165	✤	20	
Plaited loaf	Baking tray + greaseproof paper	2 (3)	170	✤ᵉ	30-35	Do not preheat with ✤ᵉ; do not open the appliance door.
Garlic baguette, herb baguette	Baking tray + greaseproof paper	2 (3)	200	--- ---	8-10	
Lye bread, frozen	Baking tray + greaseproof paper	2 (3)	200	✤	10-12	
Multigrain bread	Baking tray + greaseproof paper	2 (3)	200/170	✤	40-50 [1]	
Multigrain bread	Baking tray + greaseproof paper	2 (3)	200/170	--- ---	40-50 [1]	

[1] Preheat the appliance to the specified temperature. Turn the temperature down to the second specified temperature when placing the food in the oven.

Food	Accessory/ cookware	Level	Temperature in °C	Type of heating	Cooking time in mins	Comments
Multigrain bread	Baking tray + greaseproof paper	2 (3)	200/165	--- _	45-50 [1]	
Olive and tomato bread	Baking tray	2 (3)	200/170	--- ---	40-50 [1]	
Sourdough bread	Baking tray	2 (3)	200/180	--- ---	50-60 [1]	

22.9 Dough proving – leaving to rise

Your appliance provides the ideal conditions for proving dough and dough mixtures or raw pastries without them drying out.

- Place the bowl containing the dough onto the wire rack. To do this, use the "Dough proving" operating mode.
- For large quantities, e.g. bread, set the temperature to 38-40 °C. This helps the dough to rise evenly from the centre to the edges.
- For small quantities of dough, e.g. sweet pastry swirls and bread rolls, you can set a temperature of 40-45 °C.
- The cooking time specified is intended as a guide only. Leave the dough to rise until it has doubled its volume.
- If the dough does not rise, this means that either you have not used sufficient yeast or you have not kneaded the dough sufficiently.

Dough proving

Food	Accessory/ cookware	Level	Temperature in °C	Type of heating	Cooking time in mins	Comments
Dough mixture	Bowl	2 (3)	38-45		25-45	E.g. yeast dough, natural fermentation starter, sourdough, yeast dumplings.

22.10 Desserts

Note the recommended settings for desserts.

- Oven-cooked desserts are very easy to prepare – all that remains is to put them in the oven. This preparation method is useful for relatively large quantities, for example if you have guests.
- Oven-cooked desserts are generally eaten hot, and are very enjoyable particularly during the colder months.

Desserts

Food	Accessory/ cookware	Level	Temperature in °C	Type of heating	Cooking time in mins	Comments
Apple crumble	Ovenproof dish	2 (3)	200		35-40	Apple bake with a crumble topping; equally delicious with berries or mirabelles.
Apple crumble	Ovenproof dish	2 (3)	200	--- _	25-30	Apple bake with a crumble topping; equally delicious with berries or mirabelles. For soft apple varieties.
Apple crumble	Ovenproof dish	2 (3)	200	_ ---	25-30	Apple bake with a crumble topping; equally delicious with berries or mirabelles. For firm apple varieties.
Baked apples	Ovenproof dish	2 (3)	190-200		20-30	Recommendation: Use cooking apples, e.g. Boskoop apples. These are particularly well suited for cooking and baking.

[1] Preheat the appliance to the specified temperature. Turn the temperature down to the second specified temperature when placing the food in the oven.

Food	Accessory/ cookware	Level	Temperature in °C	Type of heating	Cooking time in mins	Comments
						Summer version: Stuff with ricotta cheese, lemon, honey, cardamom, vanilla and pine nuts.
Clafoutis	Ovenproof dish	2 (3)	190	✤	30-35	French dessert: Traditionally made with cherries; equally delicious with mirabelles or berries.
Clafoutis	Ovenproof dish	2 (3)	200	✤e	55	French dessert: Traditionally made with cherries; equally delicious with mirabelles or berries. Do not preheat with ✤e; do not open the appliance door.
Compote	Glass tray or Grill tray	2 (3)	160-180	✤	30-40	E.g. apricots or a variety of berries. Do not add any liquid; stir thoroughly several times. Refine with honey, fresh vanilla or cinnamon.
Compote	Glass tray or Grill tray	2 (3)	200	--- ---	30-40	E.g. apricots or a variety of berries. Do not add any liquid; stir thoroughly several times. Refine with honey, fresh vanilla or cinnamon.
Meringue	Baking tray + greaseproof paper	2 (3)	100	✤	150	When dividing up the mixture, make sure that the portions are spread as thinly as possible so that the mixture dries out well.
Bread and butter pudding, Kirschenmichel (German bread and butter pudding with sour cherries)	Ovenproof dish	2 (3)	150	✤	50-55	E.g. with cherries or apricots
Sweet bake	Ovenproof dish	2 (3)	160-180	✤	30-40	E.g. semolina, quark or rice pudding
Topfenpalatschinken (crepes with quark filling)	Ovenproof dish	2 (3)	180-190	✤	8-10	Austrian speciality: Pancakes filled with quark and raisins, topped with cream and grilled.

22.11 Defrosting

In your appliance, you can defrost frozen food gently and faster than in the refrigerator and more evenly than in the microwave.

⚠ **WARNING – Risk of serious harm to health!**
There is a risk of salmonella from meat and poultry. Meat and poultry may transmit germs.

- When defrosting food from animal sources, you must remove the liquid that escapes during defrosting. Ensure that the liquid that escapes during defrosting never comes into contact with other foods.
- Slide the glass tray or grill tray under the food. Pour away the liquid that collects in the dish or tray as the meat and poultry defrosts. Then clean the sink and rinse it with plenty of water. Clean the glass tray or grill tray in hot soapy water or in the dishwasher.
- Once the food is defrosted, run the oven for 15 minutes at 180 °C in Hot air mode.

- To do this, use the ⁑ "Defrost" operating mode.
- The defrosting times specified are intended as a guide only. The defrosting time depends on the size, weight and shape of the frozen food. To reduce the defrosting time, freeze your food flat and in individual pieces.
- Slide the wire rack with the frozen food into the second shelf level (into the third shelf level if there are 5 shelf levels). Slide the glass tray or grill tray underneath to catch any liquid that drips down as the food defrosts.
- Remove the food from the packaging before defrosting.
- Do not defrost more food than you intend to eat on this occasion.
- Remember: Food that has been defrosted may not keep for as long as fresh food and it will spoil more quickly. Prepare defrosted food immediately and cook it thoroughly.

- After half of the defrosting time, turn fish or meat and separate pieces of frozen food, such as berries or pieces of meat. Fish does not need to be fully defrosted. When the surface is soft enough to absorb the spices, the fish is sufficiently defrosted.
- The oven is not suitable for defrosting whole chickens or joints of meat as this takes a very long time. Steam ovens and combi-steam ovens can be used to defrost this kind of food much more quickly.

Defrosting

Food	Accessory/ cookware	Level	Temperature in °C	Type of heating	Cooking time in mins	Comments
Berries, 500 g	Glass tray or Grill tray	2 (3)	50-55		25-30	
Fish fillet, 150 g each	Wire rack	2 (3)	45-50		45-50	
Prawns	Wire rack	2 (3)	45-50		20-25	
Vegetables, 500 g	Glass tray or Grill tray	2 (3)	50-55		30-50	The defrosting time depends on the portions. Small vegetables, such as peas and beans, defrost more quickly than frozen spinach blocks and cauliflower florets.
Chicken thighs, 200 g each	Wire rack	2 (3)	50-55		45-50	

22.12 Preserving food

Preserve fruit and vegetables in jars.

- You can easily preserve fruit and vegetables in your appliance.
- Cook food as soon as possible after purchase or after it has been harvested. Prolonged storage reduces the vitamin content and means that food is on the verge of fermenting.
- Only use fruit and vegetables that are in good condition.
- The appliance is not suitable for preserving meat.
- Carefully check and clean the preserving jars, rubber sealing rings, clips and springs.
- Place the preserving jars in a heat-resistant vessel containing water. Make sure that they do not touch. The water level must reach at least three quarters of the way up to the top of the contents of the jars.
- Once the cooking time has elapsed, open the oven door. Do not remove the preserving jars from the cooking compartment until they have completely cooled down.
- Store the preserves in a cool, dark and dry place, e.g. in a pantry. Once the jars have been opened, consume the contents quickly and store in the refrigerator.

Preserving food

Food	Accessory/ cookware	Level	Temperature in °C	Type of heating	Cooking time in mins	Comments
Fruit	Wire rack	1 (2)	150-160	⎓	35-40	Pour into sealed preserving jars.
Vegetables	Wire rack	1 (2)	190-200	⎓	60-120	Pour into sealed preserving jars.

22.13 Disinfecting

Note the recommended settings for disinfection.

- Before you begin preserving the food, the jars should be disinfected in the oven to prevent the food from spoiling. This is the only way to ensure that preserves keep for a relatively long time and can be stored outside of the refrigerator.
- Disinfect the empty jars at 100 °C for at least 20 minutes in Hot air mode. The lids and rubber preserving seals for the jars can be disinfected at the same time in boiling water to avoid them drying out in the dry heat of the oven.

Disinfecting

Food	Accessory/ cookware	Level	Temperature in °C	Type of heating	Cooking time in mins	Comments
Disinfecting	Wire rack	2 (3)	100		20-25	Preserving jars, baby bottles

22.14 Drying

Dry fruit, vegetables or herbs.

- Drying is a method of preserving food in which up to 50% of the liquid contained in the food is removed by exposing it to dry heat. This also makes the flavour more intense.
- The thicker the food, the longer the drying process takes. The quickest way to dry food – which is also the method that saves the most energy – is to cut it into slices.
- Place the prepared food onto a wire rack or baking tray covered with greaseproof paper. Turn the food from time to time during the drying process.
- The duration depends on the thickness of the food and on the natural level of moisture in the food, e.g. tomatoes take longer to dry out than mushrooms.
- If you want to dry food on 2 levels at the same time, use levels 1 and 3 (or 2 and 4).

Drying

Food	Accessory/ cookware	Level	Temperature in °C	Type of heating	Cooking time in mins	Comments
Apple, in rings	Wire rack + greaseproof paper	2 (3)	70	✤	5-8	
Herbs	Wire rack + greaseproof paper	2 (3)	50-60	✤	1½-2	E.g. chives, parsley and sage
Mushrooms, sliced	Wire rack + greaseproof paper	2 (3)	50-60	✤	3-4	
Tomatoes, in quarters	Wire rack + greaseproof paper	2 (3)	60-70	✤	7-8	Core the tomatoes to avoid an extended drying time.

22.15 Baking stone

Whether you are baking crispy pizza or fresh bread, using the baking stone will produce results that are comparable to (or even exceed) those you would get from a large stone oven because you are able to control the baking temperature precisely.

- You will need a baking stone and heating element – these are special accessories.
- Depending on the size, you can place several pizzas, bread rolls or other baked items on the baking stone at once.
- You can bake several pizzas in succession. This may increase the baking time per pizza by approx. 1-3 minutes.
- We recommend that you use a core temperature probe when baking bread. After baking for 10-15 minutes, insert the core temperature probe into the thickest part of the dough. The probe measures the temperature within the baked items and switches the oven off once the set core temperature has been reached.
- When dough is baked, it needs to be able to expand without the surface breaking apart. This can be achieved by pricking it several times with a fork or by making a cut with a knife.
- The temperatures and times specified in the cooking table are average values. Always follow the manufacturer's instructions for pre-cooked and frozen products, too.

Baking stone

Food	Accessory/ cookware	Level	Temperature in °C	Type of heating	Cooking time in mins	Comments
Bread rolls, fresh, 50 g each	Baking stone	1	250/200	▭	15-20 [1]	
Flatbread	Baking stone	1	210	▭	15	The cooking time depends on the size and thickness of the flatbread.
Tarte flambée, fresh	Baking stone	1	300	▭	3-4	Recipe tip: Traditional or with goats' cheese, Parma ham, figs and spring onion.
Tarte flambée, frozen	Baking stone	1	250	▭	4-5	

[1] Preheat the appliance to the specified temperature. Turn the temperature down to the second specified temperature when placing the food in the oven.

Food	Accessory/ cookware	Level	Temperature in °C	Type of heating	Cooking time in mins	Comments
Foccacia	Baking stone	1	210		15	Top with various ingredients, e.g. herbs, sea salt, olives, anchovies, onion, ham, tomatoes or cheese.
Multigrain bread	Baking stone	1	175		45	
Olive and tomato bread	Baking stone	1	175		45	
Pizza, fresh	Baking stone	1	275		5-8	The cooking time varies depending on the type and thickness of the dough and topping.
Pizza, frozen	Baking stone	1	230		8-10	The cooking time varies depending on the thickness of the dough. Follow the manufacturer's instructions.
Sourdough bread	Baking stone	1	250/200		50-60 [1]	

22.16 Roaster

You can also easily prepare large pieces of meat in the roaster, and you can braise large quantities of meat.

- You will need the roaster, pull-out system and heating element (special accessories).
- Food is easy to prepare and can be kept warm in the oven. Your kitchen looks tidy, the hob is not dirty, and fewer cooking smells are produced as the dish is being cooked in the oven.
- The non-stick coating enables you to roast using very little fat.
- Cooking liquids reduce down quickly. Make sure that there is always sufficient cooking liquid. For a cooking time of 30 minutes, add approx. ½ l of liquid.
- When cooking in a sauce, always ensure that the sauce remains runny and add cooking liquid.
- In addition, follow the instructions in the instruction manual for the roaster.

Tip: Rather than adding the fat to the roaster, brush oil over the meat. This ensures that the heat is transferred directly to the meat.

Roaster

Food	Accessory/ cookware	Level	Temperature in °C	Type of heating	Cooking time in mins	Comments
Farmer's omelette	Roaster	1	175		Searing + 10-15	Sear all the ingredients in the roaster, apart from the eggs; then pour the egg mixture over the top and continue cooking until the farmers' omelette is firm.
Chilli con carne	Roaster	1	220/130		Searing + 60-90 [2]	
Beef goulash	Roaster	1	220/130-140		Searing + 60-120 [2]	Sear the onions and meat; use the searing function for this. Pour in liquid and turn the temperature back down. Cook for 60-120 minutes depending on the type of meat.
Chicken breast	Roaster	1	200		Searing + 15-20	Before you place the food in the roaster, heat it up using the searing function. Then insert the core temperature probe.
Ossobuco	Roaster	1	220/140		Searing + 60-90 [2]	Sear the meat and vegetables; use the searing function for this. Pour in liquid and turn the temperature

[1] Preheat the appliance to the specified temperature. Turn the temperature down to the second specified temperature when placing the food in the oven.
[2] Sear at a high temperature to begin with; to continue cooking, turn the temperature back down.

Food	Accessory/ cookware	Level	Temperature in °C	Type of heating	Cooking time in mins	Comments
						back down; cover and cook for a further 60-90 minutes. Turn the sliced shanks once.
Peppers, stuffed, vegetarian	Roaster	1	200		30	Recipe tip: Stuff with boiled rice, soft wheat or lentils and onions, cheese, herbs and seasoning/ spices.
Venison ragout	Roaster	1	220/130-140		Searing + 60-100 [1]	Sear the meat and other ingredients; use the searing function for this. Pour in liquid and turn the temperature back down; cook for 60-100 minutes depending on the type of meat and the size of the pieces of meat.
Roulades	Roaster	1	220/120		Searing + 60-90 [1]	Sear the roulades in portions; use the searing function for this.
Viennese boiled beef	Roaster	1	220/130		Searing + 210-240 [1]	Sear the onion halves for a short time, add the vegetables and sear briefly, then fill the dish with liquid. Bring the vegetable water to the boil, season and add the Viennese boiled beef. The meat should be completely covered in liquid. Place the lid on the roaster and continue cooking at a temperature of 130 °C.
Tortilla	Roaster	1	175		Searing + 10-15	Sear all the ingredients in the roaster, apart from the eggs; then pour the egg mixture over the top and continue cooking until the tortilla is firm.

22.17 Tips for keeping acrylamide levels to a minimum when cooking

General information

- Keep cooking times as short as possible.
  Cook food until it is golden brown, but not too dark.
  Use large, thick pieces of food. Cooking produces less acrylamide.

Baked goods

- Set the temperature for hot air to max. 180 °C.

Biscuits

- Brush biscuits with egg or egg yolk. This reduces the production of acrylamide.
  Spread out a single layer evenly on the baking tray.

Oven chips

- Spread the chips out evenly and in a single layer on the baking tray.
  Cook at least 400 g at once on a baking tray so that the chips do not dry out.

23 Customer Service

Function-relevant genuine spare parts according to the corresponding Ecodesign Order can be obtained from Customer Service for a period of at least 10 years from the date on which your appliance was placed on the market within the European Economic Area.

Note: Under the terms of the manufacturer's warranty the use of Customer Service is free of charge.

Detailed information about the warranty period and the warranty conditions in your country is available via the QR code on the enclosed document on service contacts and warranty conditions, from our customer service or on our website.

If you contact Customer Service, you will require the product number (E-Nr.) and the production number (FD) of your appliance.

You can find the contact details for our customer service via the QR code on the enclosed document on service contacts and warranty conditions or on our website.

This product contains light sources from energy efficiency class G.

[1] Sear at a high temperature to begin with; to continue cooking, turn the temperature back down.

You can find the information required as per Regulations (EU) 65/2014, (EU) 66/2014 and (EU) 2023/826 online at *www.gaggenau.com* on the product and service pages for your appliance, in the area of user manuals and additional documents.

23.1 Product number (E-Nr.) and production number (FD)

You can find the product number (E-Nr.) and the production number (FD) on the appliance's rating plate.

You will see the rating plate with these numbers if you open the appliance door.

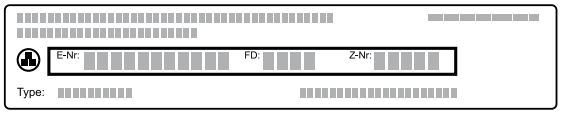

Make a note of your appliance's details and the Customer Service telephone number to find them again quickly.

24 Declaration of Conformity

BSH Hausgeräte GmbH hereby declares that the appliance with Home Connect functionality conforms to the basic requirements and other relevant provisions of Directive 2014/53/EU.
A detailed RED Declaration of Conformity can be found online at *www.gaggenau.com* among the additional documents on the product page for your appliance.

Hereby, BSH Hausgeräte GmbH declares that the appliance with Home Connect functionality is in compliance with relevant statutory requirements. [1]
A detailed Declaration of Conformity can be found online at *www.gaggenau.com/gb* among the additional documents on the product page for your appliance. [1]

2.4 GHz band (2400–2483.5 MHz): Max. 100 mW
5-GHz band (5150–5350 MHz + 5470–5725 MHz): max. 50 mW

	BE	BG	CZ	DK	DE	EE	IE	EL	ES
	FR	HR	IT	CY	LI	LV	LT	LU	HU
	MT	NL	AT	PL	PT	RO	SI	SK	FI
	SE	NO	CH	TR	IS	UK (NI)			
5 GHz WLAN (Wi-Fi): For indoor use only.									

AL	BA	MD	ME	MK	RS	UK	UA
5 GHz WLAN (Wi-Fi): For indoor use only.							

24.1 Statement of Compliance for Great Britain

Product type
This statement of compliance covers the products described in this information for use whose model identifier group is seen on the title page. The full model identifier is made up of the characters before the slash in the product number (E no.) which can be found on the rating plate. Alternatively, you can also find the model identifier in the first line of the UK Energy Label.

Name and address of manufacturer
BSH Hausgeräte GmbH, Carl-Wery-Strasse 34, 81739 München, Germany

This statement of compliance is prepared by the manufacturer.

The manufacturer, BSH Hausgeräte GmbH deems that it has complied with

- provision 5.1-1 of ETSI EN 303 645 v2.1.1 and, where relevant, provision 5.1-2 of ETSI EN 303 645 v2.1.1;
- provision 5.2-1 of ETSI EN 303 645 v2.1.1;
- provision 5.3-13 of ETSI EN 303 645 v2.1.1.

Support period
BSH Hausgeräte GmbH will provide security updates that are necessary to maintain the main functions free of charge until at least 28/02/2034.

[1] Only applies to Great Britain

25 Installation instructions

Observe this information when installing the appliance.

mm

25.1 General installation instructions

Follow these instructions before you start installing the appliance.

⚠ WARNING – Risk of fire!

It is dangerous to use an extended power cord and non-approved adapters.

- ▸ Do not use extension cables or multiple socket strips.
- ▸ Only use adapters and power cords approved by the manufacturer.
- ▸ If the power cord is too short and a longer one is not available, please contact an electrician to have the domestic installation adapted.

⚠ WARNING – Risk of injury!

The appliance is heavy.

- ▸ To move the appliance, two people are required.
- ▸ Use only suitable tools and equipment.

Sharp-edged parts may be accessible during installation.

- ▸ Wear protective gloves.

- Read this instruction manual carefully.
- Only an appliance which has been correctly installed in accordance with these installation instructions can be used safely. The installer shall be liable for damages incurred as a result of incorrect installation.
- Switch off the power supply before carrying out any work.
- Check the appliance for damage after unpacking it. Do not connect the appliance if it has been damaged in transit.
- Only a licensed professional may connect appliances without plugs. Damage caused by incorrect connection is not covered under the warranty.
- Do not lift the appliance using the door.
- When installing, observe the current, valid building regulations as well as the regional power company's regulations.
- Install the appliance in accordance with the installation diagram. Observe the minimum clearances.
- Installation behind cabinet doors: Suitable measures should be taken to ensure these types of doors cannot close during operation. There is a risk of overheating if the door does not remain open during operation or during cooling (fan operation).
- Before starting up the appliance, remove any packaging material and adhesive film from the cooking compartment and the door.
- The dimensions in the figures are in mm.

25.2 Planning notes

Observe the following planning notes before installing the appliance.

- The door direction cannot be reversed.
- The distance from the furniture cavity to the door panel surface is 47 mm.
- Consider the overhang when planning to open drawers next to the appliance.
- When planning a corner solution, consider a door opening angle of at least 90°.
- If you install the appliance under a hob, maintain a clearance of at least 15 mm between the underside of the hob and the top of the oven housing. Take the planning notes of the hobs into consideration, particularly for the ventilation, gas connection and the electric connection.

25.3 Appliance dimensions

You will find the dimensions of the appliance here

BO47.

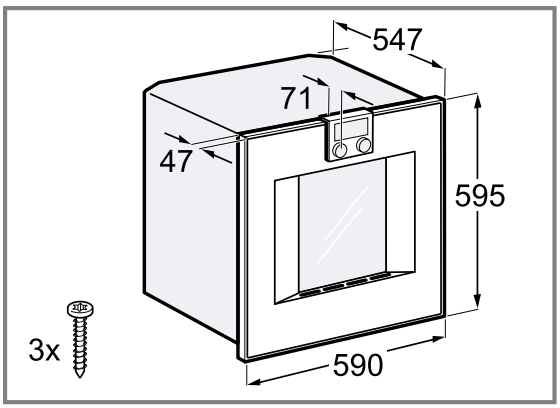

BO48.

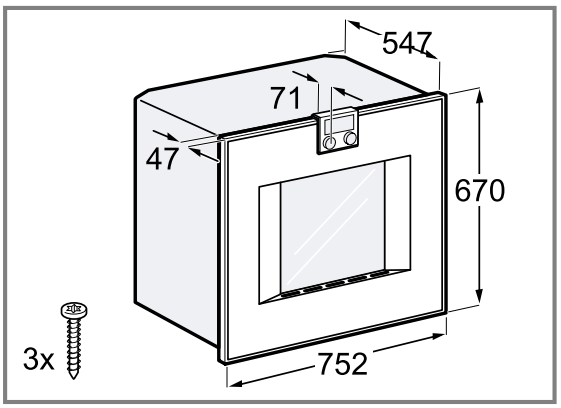

25.4 Preparing fitted units

Requirement: Fitted units must be heat-resistant up to 90 °C, and adjacent unit fronts up to 70 °C.

1. To ventilate the appliance, create a ventilation cut-out of at least 20 x 500 mm in the intermediate floor of the fitted cabinet.
2. Ensure that the mains socket is located outside of the built-in niche.
3. Carry out cut-out work on the units and then insert the appliance.
4. After making the cut-outs, remove any shavings. Shavings may impair the function of electrical components.
5. Secure any unsecured units to the wall using a standard bracket.
6. Only install the appliance high enough that the customer can remove any accessories effortlessly.

25.5 Electrical connection

In order to safely connect the appliance to the electrical system, follow these instructions.

⚠ **WARNING – Risk of electric shock!**

Improper repairs are dangerous.

- Repairs to the appliance should only be carried out by trained specialist staff.
- Only use genuine spare parts when repairing the appliance.
- If the power cord or the appliance power cable of this appliance is damaged, it must be replaced with a special power cord or special appliance power cable, which is available from the manufacturer or its Customer Service.
- If the power cord of this appliance is damaged, it must be replaced by trained specialist staff.

- Ensure that there is sufficient fuse protection for the household wiring. The voltage and frequency of the appliance must match the electrical installation; see the rating plate.
- The appliance corresponds to protection class I and must only be operated with a protective earth connection.
- Fuse protection by means of B- or C-type circuit breakers is required.
- An all-pole isolating switch with a contact gap of at least 3 mm must be fitted during installation. This must remain accessible after installation.
- The appliance must be disconnected from the power supply whenever installation work is being carried out.
- Appliances without a power cable must only be connected in accordance with the connection diagram. If required, install the enclosed copper bridges.
- The power cable must correspond to type H05 VV-F or a higher rating.
- The yellow/green wire for the PE connection must be 10 mm longer than the other wires for the appliance.
- To achieve the 550 mm installation depth, the connection cable needs to follow the slanted edge on the lower right hand corner of the housing.

25.6 LAN connection to the home network

This appliance can be networked. You can connect the appliance to the home network using a LAN cable. The scope of delivery does not include a LAN cable.

Establishing the LAN connection

1. Before installing the appliance, insert a LAN cable into the socket on the back of the appliance.
2. Use the strain relief to secure the LAN cable in place.

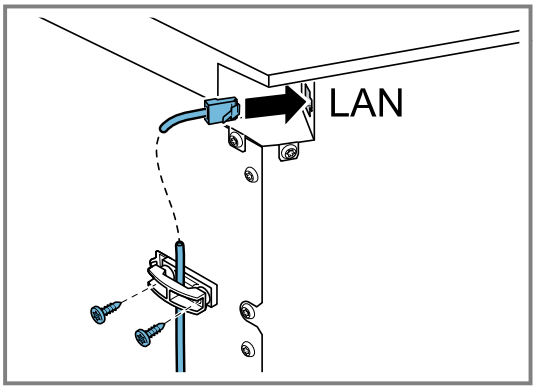

3. Connect the LAN cable to a network connection.

25.7 Installing the appliance

1. Observe the clearances when installing in a tall unit.

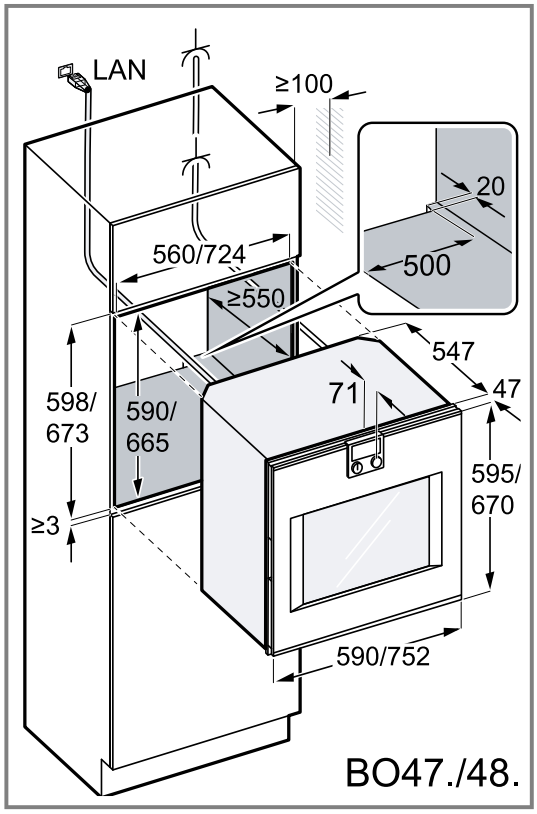

When installing 2 appliances next to each other, align both handles to the centre.

2. If there is no intermediate floor above the appliance, secure the appliance against tipping in the unit. Secure two commercially available brackets on both sides in the unit at a depth of 450 mm, 5 mm above the height of the appliance.
3. Push the appliance all the way into the built-in unit.
   - Do not kink or trap the connection cable, or route it over sharp edges.

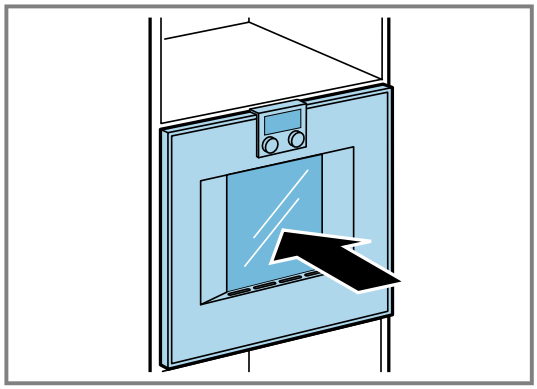

4. Centre the appliance.
   There must be an air gap of at least 2 mm between the appliance and the adjacent unit fronts.
5. Use a spirit level to adjust the appliance so that it is perfectly level.

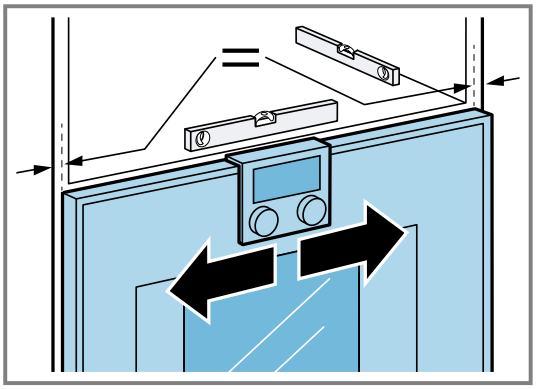

6. Open the appliance door.

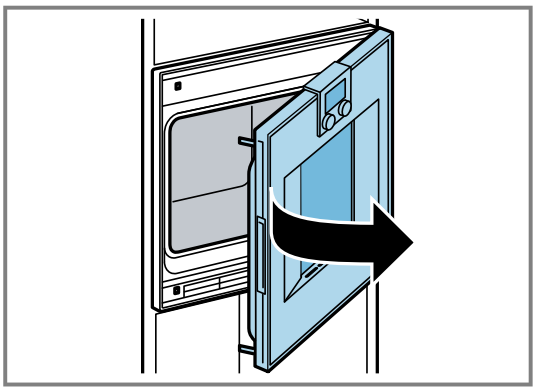

7. Secure the appliance using the enclosed screws.
   - First, secure the appliance in place in the unit using the lower screws ①.
   - Screw on the upper screw ②.

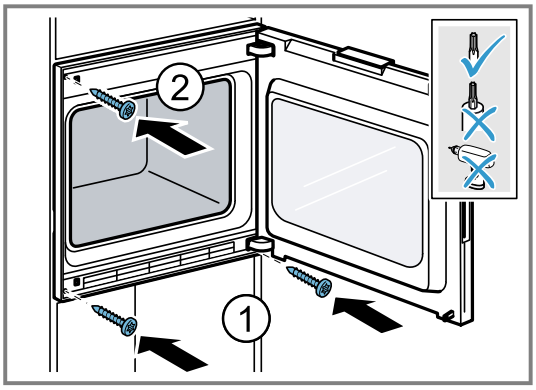

8. Remove the transit bolt from the door.

25.8 Aligning the appliance door

The appliance door is already aligned when the appliance is delivered. Alignment is not normally required. If required, you can adjust the appliance door's alignment at the hinge in order to achieve a precise gap. You cannot adjust the appliance door's height.

Aligning the appliance door

1. Pull the appliance out slightly from its built-in recess.

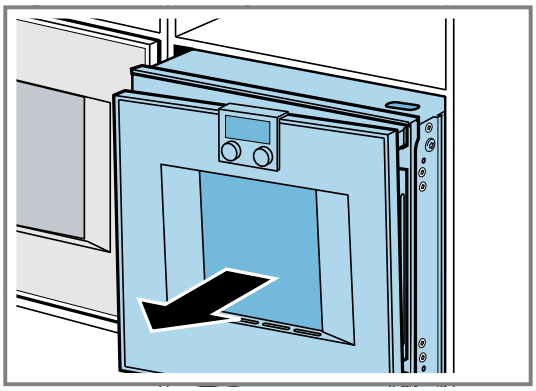

An oval opening is located on the top of the appliance on the hinged side.

2. Undo the two screws a little, but do not completely remove them.

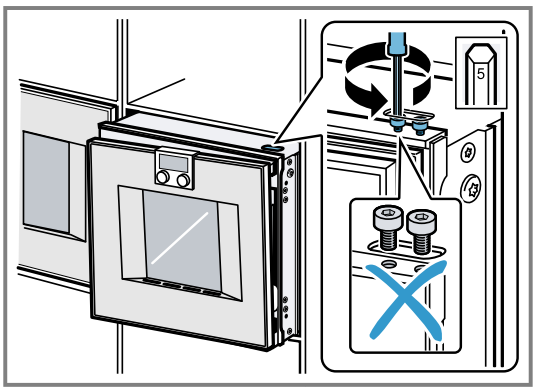

3. Adjust the appliance door using the side screw; to do this, open the appliance door and then close it again if necessary.

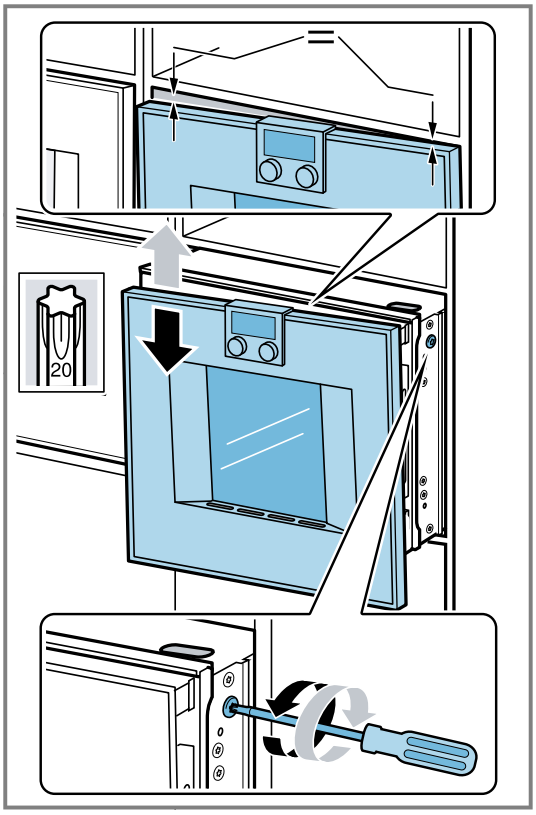

4. Check the alignment.

5. Tighten both screws.

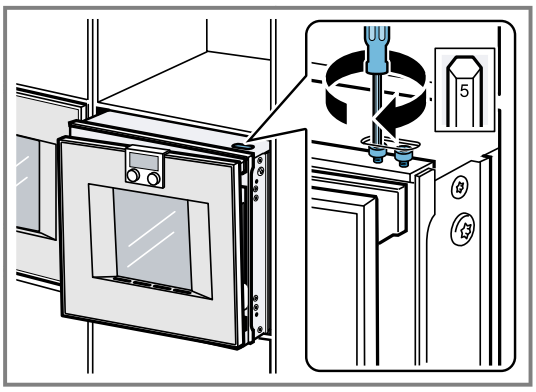

6. Slide the appliance into the built-in recess.

25.9 Combining the appliance with a combi-steam oven

Requirement: The combi-steam oven is installed.

1. Observe the installation instructions for the combi-steam oven.
2. For an installation depth of 550 mm, position the water hoses and the connection cable in the area of the slanted edge on the corner of the housing.

25.10 Combining the appliance with a warming drawer

ATTENTION

Sharp edges on the appliance may damage the front panel of the warming drawer.

- Do not damage the front panel of the warming drawer when sliding the appliance in.
- Before installing another appliance, open the warming drawer, place a cloth over the front panel and close the warming drawer to protect the front panel of the warming drawer from damage.

1. Only combine suitable appliances of the same brand and series.
2. Install the warming drawer first.
3. Follow the installation instructions for the warming drawer.
4. Slide the appliance, on the warming drawer, into the fitted cabinet.

25.11 Removing the appliance

1. Disconnect the appliance from the power supply
2. Undo the fastening screws.
3. Lift the appliance slightly and pull it out completely.

The difference is Gaggenau

gaggenau.com

BSH Hausgeräte GmbH
Carl-Wery-Straße 34
81739 München, GERMANY
www.gaggenau.com

Valid within Great Britain:
Imported to Great Britain by
BSH Home Appliances Ltd.
Grand Union House
Old Wolverton Road
Wolverton, Milton Keynes
MK12 5PT
United Kingdom

9001837072 (050415) REG25
en