SIEMENS

HK8Q3A150M

Free standing cooker

EN Information for Use

Register your appliance on My Siemens and discover exclusive services and offers.

Siemens Home Appliances

Further information and explanations are available online:

Table of contents

1 Safety 2
2 Preventing material damage 5
3 Environmental protection and saving energy 6
4 INSTALLATION AND CONNECTION 7
5 Familiarising yourself with your appliance 9
6 Accessories 12
7 Before using for the first time 13
8 Operating the hotplate 13
9 Basic operation 14
10 Rapid heating 14
11 Time-setting options 15
12 Childproof lock 16
13 Cleaning and servicing 16
14 Rails 19
15 Appliance door 20
16 Troubleshooting 22
17 Transportation and disposal 23
18 Customer Service 24
19 How it works 24

1 Safety

Observe the following safety instructions.

1.1 Intended use

Read the information on intended use to ensure that you use the appliance correctly and safely.
The figures in these instructions are intended for information purposes.
Only a licensed professional may connect appliances without plugs. Damage caused by incorrect connection is not covered under the warranty.

Only use the appliance as follows:
- To prepare meals and drinks.
- Under supervision. Never leave the appliance unattended when cooking for short periods.
- in private households and in enclosed spaces in a domestic environment.
- up to an altitude of max. 4000 m above sea level.

Do not use the appliance:
- On boats or in vehicles.
- as a room heater.
- with an external timer or a remote control.

You cannot operate the appliance with a timer or remote control.
Always place accessories in the cooking compartment the right way round.

1.2 Restriction on user group

This appliance may be used by children aged 8 or over and by people who have reduced physical, sensory or mental abilities or inadequate experience and/or knowledge, provided that they are supervised or have been instructed on how to use the appliance safely and have understood the resulting dangers.
Do not let children play with the appliance.
Children must not perform cleaning or user maintenance unless they are at least 15 years old and are being supervised.
Keep children under the age of 8 years away from the appliance and power cable.

1.3 Safe use

⚠ WARNING – Risk of fire!

The appliance will become hot.
- ▸ Do not keep combustible objects or aerosol cans in drawers directly underneath the hob.
- ▸ Never store or use combustible materials (e.g. spray cans or cleaning agents) under the appliance or in its immediate vicinity.

The cooking surface becomes very hot.
- Never place flammable objects on the cooking surface or in its immediate vicinity.
- Never place objects on the cooking surface.

Leaving fat or oil cooking on an unattended hob can be dangerous and may lead to fires.
- Never leave hot oil or fat unattended.
- Never attempt to extinguish a fire using water; instead, switch off the appliance and then cover with a lid or a fire blanket.

Hob covers can cause accidents, for example due to overheating, catching fire or materials shattering.
- Do not use hob covers.

Opening the appliance door creates a draught. Greaseproof paper may come into contact with the heating element and catch fire.
- Never place greaseproof paper loosely over accessories when preheating the appliance and while cooking.
- Always cut greaseproof paper to size and use a plate or baking tin to hold it down.

Combustible objects that are left in the cooking compartment may catch fire.
- Never store combustible objects in the cooking compartment.

Food may catch fire.
- The cooking process must be monitored. A short process must be monitored continuously.

Loose food remnants, fat and meat juices may catch fire.
- Before using the appliance, remove the worst of the food residues and remnants from the cooking compartment, heating elements and accessories.

Overheating of the appliance may cause a fire.
- Never install the appliance behind a decorative door or unit door.

It is dangerous to use an extended power cord and non-approved adapters.
- Do not use extension cables or multiple socket strips.
- Only use adapters and power cords approved by the manufacturer.
- If the power cord is too short and a longer one is not available, please contact an electrician to have the domestic installation adapted.

⚠ WARNING – Risk of burns!

The appliance and its parts that can be touched become hot during use, particularly the hob surround, if fitted.
- Caution should be exercised here in order to avoid touching heating elements.
- Young children under 8 years of age must be kept away from the appliance.

Hob protective grilles may cause accidents.
- Never use hob protective grilles.

Accessories and cookware get very hot.
- Always use oven gloves to remove accessories or cookware from the cooking compartment.

The appliance becomes hot during operation.
- Allow the appliance to cool down before cleaning.

When the cooking compartment is hot, any alcoholic vapours inside may catch fire.
- Only use small quantities of drinks with a high alcohol content in food.
- Open the appliance door carefully.

The appliance and its parts that can be touched become hot during use.
- Caution should be exercised here in order to avoid touching heating elements.
- Young children under 8 years of age must be kept away from the appliance.

When the cooking compartment is hot, any alcoholic vapours inside may catch fire. The appliance door may spring open. Hot steam and jets of flame may escape.
- Only use small quantities of drinks with a high alcohol content in food.
- Do not heat spirits (≥ 15% vol.) when undiluted (e.g. for marinating or pouring over food).
- Open the appliance door carefully.

⚠ WARNING – Risk of electric shock!

Improper repairs are dangerous.
- Repairs to the appliance should only be carried out by trained specialist staff.
- Only use genuine spare parts when repairing the appliance.
- If the power cord of this appliance is damaged, it must be replaced by the manufacturer, the manufacturer's Customer Service or a similarly qualified person in order to prevent any risk.

If the appliance or the power cord is damaged, this is dangerous.
- Never operate a damaged appliance.
- Never operate an appliance with a cracked or fractured surface.
- Call customer services. → *Page 24*

An ingress of moisture can cause an electric shock.
- Do not use steam- or high-pressure cleaners to clean the appliance.

The insulation on cables of electrical appliances may melt if it touches hot parts of the appliance.
- Never bring electrical appliance cables into contact with hot parts of the appliance.

If the insulation of the power cord is damaged, this is dangerous.
- Never let the power cord come into contact with hot appliance parts or heat sources.
- Never let the power cord come into contact with sharp points or edges.
- Never kink, crush or modify the power cord.

⚠ WARNING – Risk of injury!

The hinges on the appliance door move when the door is opened and closed, which could trap your fingers.
- Keep your hands away from the hinges.

Scratched glass in the appliance door may develop into a crack.
- Do not use any harsh or abrasive cleaners or sharp metal scrapers to clean the glass on the oven door, as they may scratch the surface.

If you leave the appliance door open, people may bump into it, resulting in injury.
- Always keep the appliance door closed during and after operation.

Components inside the appliance door may have sharp edges.
- Wear protective gloves.

The appliance and its parts that can be touched may have sharp edges.
- Take care when handling and cleaning them.
- If possible, wear protective gloves.

Saucepans may suddenly jump due to liquid between the saucepan base and the hotplate.
- Always keep hotplates and saucepan bases dry.

⚠ WARNING – Risk of scalding!

The accessible parts of the appliance become hot during operation.
- Never touch these hot parts.
- Keep children at a safe distance.

Hot steam may escape when you open the appliance door. Steam may not be visible, depending on the temperature.
- Open the appliance door carefully.
- Keep children at a safe distance.

If there is water in the cooking compartment when it is hot, this may create hot steam.
- Never pour water into the cooking compartment when the cooking compartment is hot.

⚠ WARNING – Risk of suffocation!

Children may put packaging material over their heads or wrap themselves up in it and suffocate.
- Keep packaging material away from children.
- Do not let children play with packaging material.

Children may breathe in or swallow small parts, causing them to suffocate.
- Keep small parts away from children.
- Do not let children play with small parts.

⚠ WARNING – Risk of tipping!

If the appliance is placed on a base and is not secured, it may slide off the base.

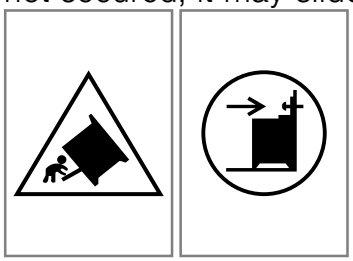

- Connect the appliance securely to the base.
- Warning: To prevent the appliance from tipping over, attach a compensation device.
- Observe the instructions for the installation.

1.4 Plinth drawer

⚠ WARNING – Risk of fire!

The surfaces of the plinth drawer may become very hot.
- Only store oven accessories in the drawer.
- Do not keep any flammable or combustible objects in the plinth drawer.

1.5 Halogen bulb

⚠ WARNING – Risk of burns!

The bulbs in the cooking compartment get very hot. There is still a risk of burning for some time after they have been switched off.

- Do not touch the glass cover.
- Avoid contact with your skin when cleaning.

⚠ WARNING – Risk of electric shock!

When changing the bulb, the bulb socket contacts are live.

- Before replacing the bulb, ensure that the appliance is switched off in order to prevent a potential electric shock.

2 Preventing material damage

2.1 Oven area

Follow the corresponding instructions when using the oven.

ATTENTION!

Objects on the cooking compartment floor at over 50 °C will cause heat to build up. The baking and roasting times will no longer be correct and the enamel will be damaged.

- Do not place any accessories, greaseproof paper or foil of any kind on the cooking compartment floor.
- Only place cookware on the cooking compartment floor if a temperature above 50 °C has been set.

If aluminium foil comes into contact with the door pane, it could cause permanent discolouration.

- Do not allow aluminium foil in the cooking compartment to come into contact with the door pane.

When the cooking compartment is hot, any water inside it will create steam. The change in temperature may cause damage.

- Never pour water into the cooking compartment when it is still hot.
- Never place cookware containing water on the cooking compartment floor.

The prolonged presence of moisture in the cooking compartment leads to corrosion.

- Allow the cooking compartment to dry after use.
- Do not keep moist food in the cooking compartment for a long time with the door closed.
- Do not store food in the cooking compartment.

Leaving the appliance to cool down with the door open will damage the front of neighbouring kitchen units over time.

- Always allow the cooking compartment to cool down with the door closed after cooking at high temperatures.
- Take care not to trap anything in the appliance door.
- Only leave the cooking compartment to dry with the door open if a lot of moisture was produced during operation.

Fruit juice dripping from the baking tray leaves stains that cannot be removed.

- When baking very juicy fruit flans, do not pack too much on the baking tray.
- If possible, use the deeper universal pan.

Using oven cleaner in a hot cooking compartment damages the enamel.

- Never use oven cleaner in the cooking compartment when it is still warm.
- Remove all food remnants from the cooking compartment and the appliance door before you next heat up the appliance.

If the seal is very dirty, the appliance door will no longer close properly during operation. This may damage the front of adjacent kitchen units.

- Keep the seal clean at all times.
- Never operate the appliance if the seal is damaged or missing.

Sitting or placing objects on the appliance door may damage it.

- Do not place or hang objects on the appliance door.
- Do not place cookware or accessories on the appliance door.

If you carry or move the appliance by the handle on the cover or move, the handle may break off and cause damage to the hinges. The handle of the cover is not designed for the weight of the appliance.

- Do not carry or move the appliance by the handle on the cover.

When grilling, due to high temperatures, the baking tray or universal pan may become deformed and damage the enamel coating when they are removed.

- When grilling, do not insert the baking tray or universal pan higher than level 3.
- Above shelf position 3, only grill directly on the wire insert.

2.2 Hob

Follow the corresponding instructions when using the appliance.

Avoiding material damage

This is where you can find the most common causes of damage and tips on how to avoid them.

Damage	Cause	Measure
Stains	Unsupervised cooking process.	Monitor the cooking process.
Stains, blisters	Spilled food, especially food with a high sugar content.	Remove immediately with a glass scraper.
Stains, blisters or fractures in the glass	Defective cookware, cookware with melted enamel or cookware with copper or aluminium base.	Use suitable cookware that is in a good condition.
Stains, discolouration	Unsuitable cleaning methods.	Only use cleaning agents that are suitable for glass ceramic, and only clean the hob when it is cold.
Blisters or fractures in the glass	Knocks or falling cookware, cooking accessories or other hard or pointed objects.	When cooking, do not hit the glass or let objects fall onto the hob.
Scratches, discolouration	Rough cookware bases or moving the cookware on the hob.	Check the cookware. Lift the cookware when moving it.
Scratches	Salt, sugar or sand.	Do not use the hob as a work surface or storage space.
Damage to the appliance	Cooking with frozen cookware.	Never use frozen cookware.
Damage to the cookware or the appliance	Cooking without contents.	Never place or heat empty cookware on a hot cooking zone.
Glass damage	Melted material on the hot cooking zone or hot pot lid on the glass.	Do not place greaseproof paper or aluminium foil nor plastic containers or pot lids on the hob.
Overheating	Hot cookware on the control panel or on the frame.	Never place hot cookware on these areas.

2.3 Drawer area

Follow the corresponding instructions when using the drawer.

ATTENTION!

Do not place hot objects in the plinth drawer. The plinth drawer may be damaged.

- Do not place hot objects in the plinth drawer.

Do not place oven accessories that exceed the height of the drawer into the plinth drawer. Otherwise, this may damage the appliance.

- Do not place oven accessories that exceed the height of the drawer into the plinth drawer.

3 Environmental protection and saving energy

3.1 Disposing of packaging

The packaging materials are environmentally compatible and can be recycled.

- Sort the individual components by type and dispose of them separately.

3.2 Saving energy

If you follow these instructions, your appliance will use less power.

Only preheat the appliance if the recipe or the recommended settings tell you to do so.

- Not preheating the appliance can reduce the energy used by up to 20%.

Use dark-coloured, black-coated or enamelled baking tins.

- These types of baking tin absorb the heat particularly well.

Open the appliance door as little as possible during operation.

- This maintains the temperature in the cooking compartment and eliminates the need for the appliance to reheat.

When baking multiple dishes, do so in succession or in parallel.

- The cooking compartment is heated after baking the first dish. This reduces the baking time for the subsequent cakes.

For longer cooking times, you can switch the appliance off 10 minutes before the cooking time ends.

- There is sufficient residual heat to finish cooking the dish.

Remove any accessories that are not being used from the cooking compartment.

- Accessories that are not being used do not need to be heated.

Allow frozen food to defrost before cooking.

- This saves the energy that would otherwise be required to defrost it.

Note:
In standby mode, the appliance requires:
- Max. 1 W for appliance versions with a clock on the display
- Max. 0.5 W for appliance versions without a clock on the display

Saving energy

If you follow these instructions, your appliance will use less power.

Select the cooking zone to match the size of your pan. Centre the cookware on the hob.
Use cookware whose base diameter is the same diameter as the hotplate.

Tip: Cookware manufacturers often give the upper diameter of the saucepan. It is often larger than the base diameter.
- Unsuitable cookware or incompletely covered cooking zones consume a lot of energy.

Cover saucepans with suitable lids.
- Cooking without a lid consumes considerably more energy.

Lift lids as infrequently as possible.
- When you lift the lid, a lot of energy escapes.

Use a glass lid.
- You can see into the pan through a glass lid without having to lift it.

Use pots and pans with flat bases.
- Uneven bases increase energy consumption.

Use cookware that is suitable for the quantity of food.
- Large items of cookware containing little food need more energy to heat up.

Cook with only a little water.
- The more water that is contained in the cookware, the more energy is required to heat it up.

Turn down to a lower power level early on.
- If you use an ongoing power level that is too high, you will waste energy.
- Unused residual heat increases energy consumption.

4 Installation and connection

You can find out where and how best to install your appliance here. You will also learn how to connect your appliance to the power supply.

4.1 Electrical connection

The appliance must be connected to the mains by a licensed expert. You must comply with the requirements of your electricity supplier.
- If the power cable of this appliance is damaged, this must be replaced by the manufacturer, the manufacturer's customer service or a similarly qualified person in order to prevent any risk.
- Any damage arising from the appliance being connected incorrectly will invalidate the warranty.

Information on electrical connection by our customer service:
- Connect the appliance in accordance with the specifications on the rating plate.
- The appliance must only be connected to an electrical connection that corresponds to the applicable regulations. The socket must be easily accessible so that you can disconnect the appliance from the electricity supply if necessary.
- Ensure that a multi-pin disconnecting system is available.
- For safety reasons, this appliance must only be connected to an earthed connection. If the safety earth terminal does not comply with regulations, protection against electrical risks is not guaranteed.
- To connect the appliance, use H 05 VV-F cables or other equivalent cables.

Information on the electrical connection by the installer:
- If the plug is not accessible following installation, an all-pole isolating unit with a contact clearance of at least 3 mm must be available on the installation side. This is not necessary if the appliance is connected via a plug that is accessible to the user.
- Electrical safety: The cooker corresponds to safety class I and may only be used in conjunction with a safety earth terminal.
- To connect the appliance, use H 05 VV-F cables or other equivalent cables.

Important information about the electrical connection

Note the following information and ensure that:

⚠ **WARNING – Risk of electric shock!**
There is a risk of electric shock if you touch live components.
- ▸ Hold the mains plug with dry hands only.
- ▸ Never pull out the mains plug from the socket while the appliance is in operation.
- ▸ Pull out the power cable directly at the plug and never by pulling the power cable as this may become damaged.
- Fit the mains plug and socket together.
- The mains plug can be accessed at all times.
- The cross section of the cable is sufficient.
- The mains cable is not kinked, crushed, modified or severed.
- If required, the mains cable must only be replaced by a qualified electrician. A replacement mains cable is available from the after-sales service.
- Do not use any multiple plugs or multi-connectors and extension cords.
- The earthing system is correctly installed.

- If using a residual current device, only use one that bears the mark ⊠. The presence of this mark is the only way to be sure that it fulfils all the applicable regulations.
- The mains cable does not come into contact with heat sources.

4.2 Setting up the appliance

Place the appliance on a smooth surface.
Never set up the appliance behind a decorative door or the door of a kitchen unit. There is a risk of overheating.

Setting the base height of the appliance

Set the base height in accordance with the functions of your appliance.

Adjusting the height of the appliance with fixed drawers

If your appliance has fixed drawers, set the base height of your appliance as follows.

Note:
The appliance has height-adjustable feet. This allows the appliance to be raised approx. 15 mm from the ground.

- The feet are located at the front and rear on the underside of the appliance.
- Raise or lower the feet by turning the feet with an Allen key until the appliance is in a horizontal position.

Setting the base height of the appliance with a removable drawer

If your appliance does not have height-adjustable feet and the drawer is removable, set the base height of your appliance as follows.

1. Pull out the plinth drawer and lift it up and out. There are adjustable feet at the front and rear on the inside of the plinth.
2. Use an Allen key to raise or lower the adjustable feet until the cooker is level.

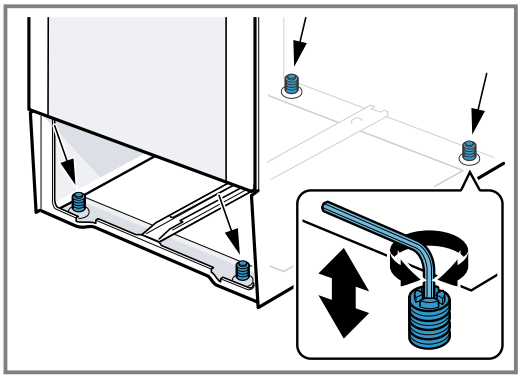

3. Push in the plinth drawer.

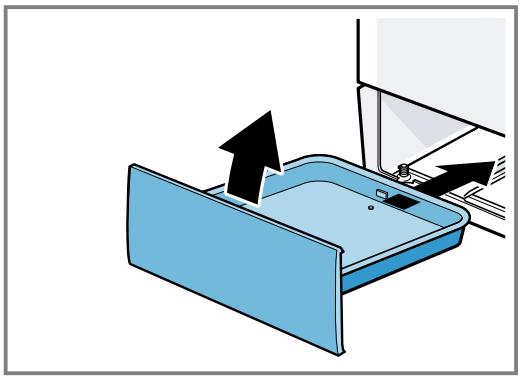

Adjacent units

Any adjacent units must not be made of flammable materials. The fronts of any adjacent units must be heat-resistant up to at least 90 °C.

Wall fixing

To prevent the appliance from tipping over, you must fix it to the wall using the enclosed brackets. To secure the appliance to the wall, follow the installation instructions.

5 Familiarising yourself with your appliance

5.1 Your appliance

You can find an overview of the parts of your appliance here.

Note: On certain models, specific details such as colour and shape may differ from those pictured.

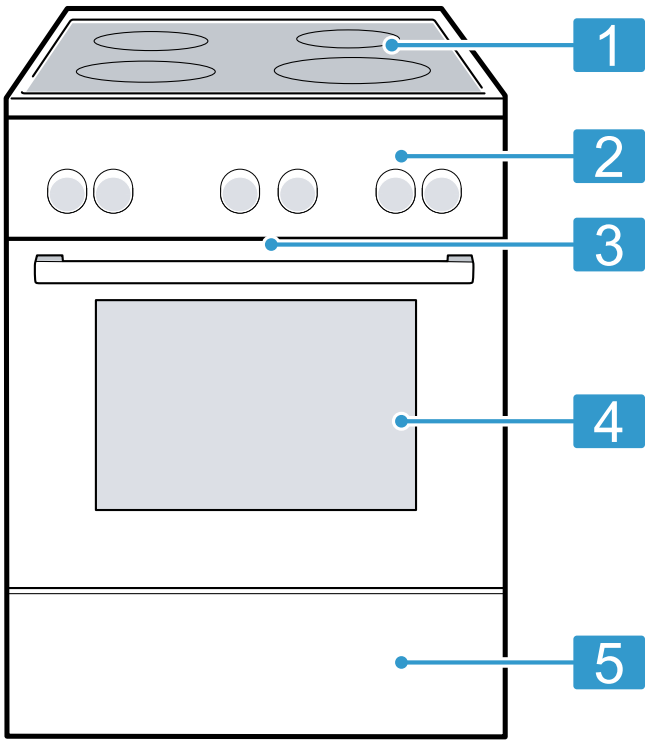

	Explanation
1	Hob
2	Control panels
3	Cooling fan[1]
4	Appliance door
5	Plinth drawer[1]

[1] Depending on the appliance specifications

5.2 Hob

You can find an overview of the different activations of the hotplates here.

On certain models, specific details such as colour and shape may differ from those pictured.

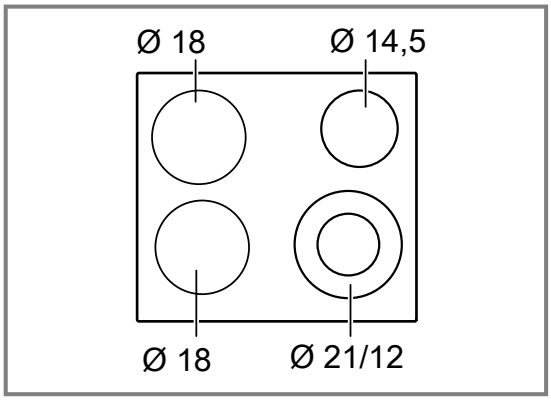

Ø = cm

	Hotplate	Activating and deactivating
○	Single-circuit hotplate	
◎	Dual-circuit hotplate	Turn the hotplate selector clockwise to ◎. Select the power level. Switching off: Turn the hotplate selector to 0 and reset. Never turn the hotplate selector to 0 via ◎.

Notes

- Dark areas in the glow pattern of the hotplate are part of the technical design. This does not affect the functionality of the hotplate.
- The hotplate regulates the temperature by switching the heat on and off. The heat may also switch on and off when at the highest setting.
  - This protects easily damaged components from overheating.
  - The appliance is protected against electrical overload.
  - You achieve better cooking results.
- With multi-circuit hotplates, the heating of the inner filament circuits and the heating of the activations may switch on and off at different times.

Residual heat indicator

The hob has a residual heat indicator for each hotplate. It shows which hotplates are still hot. Even if the hob is switched off, the display lights up until the hotplate has cooled down sufficiently. Do not touch the hotplate while the residual heat indicator is lit up.

Tip: You can keep small dishes warm or melt cooking chocolate.

5.3 Control panels

You can use the control panel to configure all functions of your appliance and to obtain information about the operating status.

Controls

You can use the controls to configure all functions of your appliance and to obtain information about the operating status.

Control	Explanation
Buttons and display	The buttons are touch-sensitive surfaces. To select a function, simply press lightly on the relevant field. The display shows symbols for active functions and the time-setting options. → *"Buttons and display", Page 10*
Function selector	Use the function selector to set the types of heating and other functions. You can turn the function selector clockwise or anti-clockwise from the zero setting ○. Depending on the appliance, the function selector can be pushed in. Press on the function selector to click it into or out of the zero setting ○. → *"Types of heating and functions", Page 10*
Temperature selector	Use the temperature selector to set the temperature for the type of heating and select settings for other functions. You can only turn the temperature selector clockwise from the zero setting ● until it offers resistance. You cannot turn it any further than this. Depending on the appliance, the temperature selector can be pushed in. Press on the temperature selector to click it into or out of the zero setting ●. → *"Temperature and setting levels", Page 11*
Hotplate control	You can use the four hotplate switches to control the output provided by each individual hotplate. The symbol above each of the switches shows you which hotplate is set using that switch. → *"Hotplate selector", Page 11*

Buttons and display

You can use the buttons to set various functions for your appliance. The display shows the settings.

If a function is active, the corresponding symbol lights up on the display. ◷ only lights up when you change the time.

Symbol	Function	Use
🔔	Short-term timer	Set the timer.
◷⊸	Childproof lock	Activate or deactivate the childproof lock.
◷⊸	Time-setting options	You can select the time ◷⊸, cooking time I→I and the end time →I. To select the individual time-setting options, press ◷⊸ several times.
–	Minus	Decrease the setting values.
+	Plus	Increase the setting values.

Types of heating and functions

To ensure that you always use the right type of heating to cook your food, we explain the differences and applications below.

Symbol	Type of heating	What it's used for and how it works
⊛	3D hot air	Bake or roast on one or more levels. The fan distributes the heat from the ring-shaped heating element in the back wall evenly around the cooking compartment.

Symbol	Type of heating	What it's used for and how it works
	Hot air gentle	Cook selected dishes gently on one level without preheating. The fan distributes the heat from the ring-shaped heating element in the back wall evenly around the cooking compartment. The food is cooked in phases using residual heat. Select a temperature between 120 °C and 230 °C. Always keep the appliance door closed when cooking. This type of heating is used to determine the energy consumption in air recirculation mode and the energy efficiency class.
	Full-surface grill	Grill flat items such as steak, sausages, or toast. Gratinate food. The entire area below the grill element becomes hot.
	Hot air grilling	Roast poultry, whole fish or large pieces of meat. The grill element and the fan switch on and off alternately. The fan circulates the hot air around the food.
	Top/bottom heating	Traditionally bake or roast on one level. This type of heating is especially suitable for cakes with moist toppings. The heat is emitted evenly from above and below. This type of heating is used to determine the energy consumption in the conventional mode.
	Defrosting	Gently defrost frozen food.

Additional functions

Here, you can find an overview of other functions of your appliance.

Symbol	Function	Use
	Rapid heating	Rapidly preheat the cooking compartment without accessories. → *"Rapid heating", Page 14*

Temperature and setting levels

There are different settings for the types of heating and functions.

Note: For temperature settings above 250 °C, the appliance reduces the temperature to approx. 240 °C after approx. 10 minutes. If your appliance has the top/bottom heating or bottom heating types, this temperature reduction does not take place.

Symbol	Function	Use
●	Zero setting	The appliance does not heat up.
50–275	Temperature range	Set the temperature in the cooking compartment in °C.
1, 2, 3 or I, II, III	Grill settings	Depending on the appliance type, set the grill settings for the grill, for the large area and grill, or for the small area. 1 = low 2 = medium 3 = high

Heat-up indicator

The appliance indicates when it is heating up.
When the appliance is heating, 🌡 lights up on the display. This symbol goes out when heating is paused.
When you preheat the appliance, the optimal time to place your food in the cooking compartment is when the symbol first goes out.

Note: Due to thermal inertia, the temperature that is displayed may differ slightly from the actual temperature inside the cooking compartment.

Hotplate selector

You can use the hotplate selector to adjust the heat setting of the hotplates.
If you activate the connections, the relevant displays light up.

Position	Function	Explanation
0	Zero setting	The hotplate is switched off.
1–9	Power levels	1 = lowest output 9 = highest output
◎	Switching on	Switch on the large dual-circuit hotplate.

5.4 Cooking compartment

The functions in the cooking compartment make your appliance easier to use.

Rails

The rails in the cooking compartment enable you to place accessories at different heights.
The cooking compartment has five shelf positions. The shelf positions are numbered from bottom to top.
You can remove the rails, e.g. for cleaning.
→ *"Rails", Page 19*

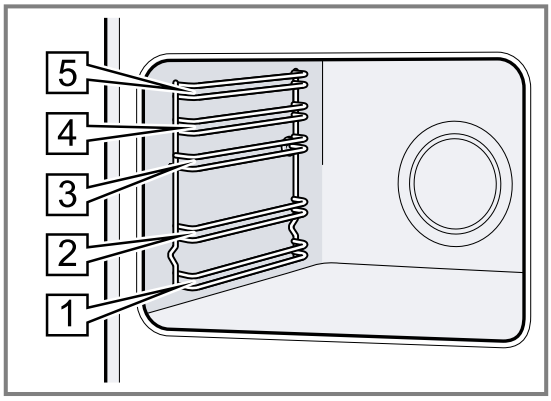

Self-cleaning surfaces

The back panel in the cooking compartment is self-cleaning. The self-cleaning surfaces are coated with a porous, matte ceramic layer and have a coarse surface. When the appliance is in operation, the self-cleaning surfaces absorb splashes from roasting or grilling and break them down.

If the self-cleaning surfaces no longer clean themselves adequately during operation, heat up the cooking compartment specifically to the right temperature.
→ *"Cleaning self-cleaning surfaces in the cooking compartment", Page 18*

Lighting

The oven light lights up the cooking compartment.
With most types of heating and functions, the lighting lights up during operation. If you use the function selector to end the operation, the lighting switches off.

Cooling fan

The cooling fan switches on and off depending on the appliance's temperature. The hot air escapes above the door.

ATTENTION!

Do not cover the ventilation slot above the appliance door. The appliance overheats.

- Ensure that the ventilation slots are unobstructed.

To ensure that the appliance cools down more quickly after operation, the cooling fan continues to run for a certain period afterwards.

Appliance door

If you open the appliance door during operation, the operation continues.

Condensation

Condensation can occur in the cooking compartment and on the appliance door when cooking. Condensation is normal and does not adversely affect appliance operation. Wipe away the condensation after cooking.

6 Accessories

Use original accessories. These have been made especially for your appliance.

Note: Heat may deform the accessory. This deformation has no effect on the function. When the accessory cools down, it will regain its original shape.

The accessories supplied may differ depending on the appliance model.

Accessories		Use
Wire rack	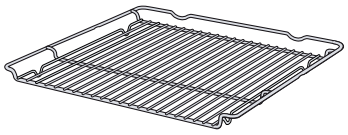	■ Baking tins ■ Ovenproof dishes ■ Cookware ■ Meat, e.g. roasting joints or steak ■ Frozen meals
Universal pan	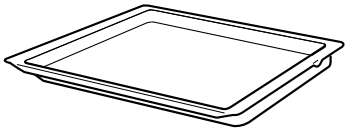	■ Moist cakes ■ Biscuits ■ Bread ■ Large roasts ■ Frozen meals ■ Catching dripping liquids, e.g. fat when grilling food on the wire rack.
Baking tray	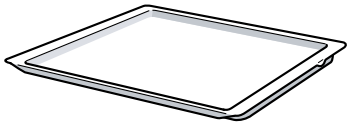	■ Tray bakes ■ Sponge cake, simple

6.1 Using the accessory

Always slide the accessory into the cooking compartment correctly. This is the only way that you can remove the accessory halfway without it tipping.

1. Insert the accessory between the two guide rods for a shelf position.

Wire rack	Insert the wire rack with the open side facing the appliance door and the curved lip ⌣ facing downwards.
Tray E.g. universal pan or baking tray	Slide the tray in with the sloping edge facing the appliance cover.

2. Slide the accessory all the way in, making sure that the accessory does not touch the appliance door.

Note: Take any accessories that you will not be using out of the cooking compartment while the appliance is in operation.

6.2 Other accessories

You can purchase other accessories from our after-sales service, specialist retailers or online.
You will find a comprehensive range of products for your appliance in our brochures and online:
siemens-home.bsh-group.com
Accessories vary from one appliance to another. When purchasing accessories, always quote the exact product number (E no.) of your appliance.
You can find out which accessories are available for your appliance in our online shop or from our after-sales service.

7 Before using for the first time

Configure the settings for initial start-up. Clean the appliance and accessories.

7.1 Initial configuration

You have to implement settings for the initial configuration before you can use your appliance.

Setting the time

Once the appliance has been connected to the mains or after a power cut, the time flashes in the display. The time starts at "12:00". Set the current time.

Requirement: The function selector must be set to the off ○ position.

1. Use — or + to set the time.
2. Press ⏲.

✔ The time that is set appears in the display.

7.2 Cleaning the appliance before using it for the first time

Clean the cooking compartment and accessories before using the appliance to prepare food for the first time.

1. Remove the accessory and the leftover packaging, such as polystyrene pellets, from the cooking compartment.
2. Before heating, wipe the smooth surfaces in the cooking compartment with a soft, damp cloth.
3. Ventilate the room while the appliance is heating.
4. Set the type of heating and the temperature.
   → *"Basic operation", Page 14*

Type of heating	3D hot air
Temperature	Maximum
Cooking time	1 hour

5. Switch off the appliance after the specified cooking time.
6. Wait until the cooking compartment has cooled down.
7. Clean the smooth surfaces with soapy water and a dish cloth.
8. Clean the accessory with soapy water and a dish cloth or a soft brush.

8 Operating the hotplate

You can find out everything you need to know about operating your hotplate here.

8.1 Setting the hotplates

You can use the hotplate switch to adjust the heat output of the hotplate.

Power level	
1	Lowest level
9	Highest level

8.2 Recommended cooking settings

You can find an overview of different foods with appropriate heat settings here.
The cooking time will vary depending on the type, weight, thickness and quality of the food. The ongoing cooking setting depends on the cookware used.

Cooking tips

- To bring food to the boil, use heat setting 9.
- Stir thick liquids occasionally.
- Food that needs to be seared quickly or that initially loses a lot of liquid during frying should be fried in small portions.
- Tips for saving energy when cooking. → *Page 7*

Meal	Ongoing cooking setting	Ongoing cooking time in minutes
Melting		
Butter, gelatine	1	-
Heating or keeping warm		
Stew, e.g. lentil stew	1	-
Milk[1]	1-2	-
Poaching or simmering		
Dumplings[2, 3]	3-4	20–30
Fish[2, 3]	3	10–15
White sauce, e.g. béchamel	1	3-6
Boiling, steaming or stewing		
Rice, with double the volume of water	3	15–30
Potato wedges	3-4	25–30
Boiled potatoes	3-4	15–20
Pasta, noodles[2, 3]	5	6–10
Stew, soup	3-4	15–60

[1] Prepare the dish without the lid.
[2] Bring the water to the boil with the lid on.
[3] Continue to cook the dish without a lid.
[4] Turn the dish several times.

Meal	Ongoing cooking setting	Ongoing cooking time in minutes
Vegetables, fresh or frozen	3-4	10–20
Food in a pressure cooker	3-4	-
Braising		
Roulades	3-4	50–60
Pot roast	3-4	60–100
Goulash	3-4	50–60
Frying with little oil Cook food without a lid.		
Escalope, plain or breaded	6-7	6–10
Chop, plain or breaded[4]	6-7	8–12
Steak, 3 cm thick	7-8	8–12
Fish and fish fillet, plain or breaded	4-5	8–20
Fish or fish fillet, breaded and frozen, e.g. fish fingers	6-7	8–12
Stir fry, frozen	6-7	6–10
Pancakes	5-6	-

[1] Prepare the dish without the lid.
[2] Bring the water to the boil with the lid on.
[3] Continue to cook the dish without a lid.
[4] Turn the dish several times.

9 Basic operation

9.1 Switching on the appliance

- Turn the function selector to any position other than the "Off" position ○.
- ✔ The appliance is switched on.

9.2 Switching off the appliance

- Turn the function selector to the "Off" position ○.
- ✔ The appliance is switched off.

9.3 Types of heating and temperature

1. Use the function selector to set the type of heating.
2. Use the temperature selector to set the temperature or grill setting.
- ✔ The appliance starts heating after a few seconds.
3. When the dish is ready, switch off the appliance.

Tips

- The most suitable type of heating for your food can be found in the description of the types of heating.
- You can also set a cooking time and an end time on the appliance.
  → *"Time-setting options", Page 15*

Changing the type of heating

You can change the type of heating at any time.

- Use the function selector to set the required type of heating.

Changing the temperature

You can change the temperature at any time.

- Turn the temperature selector to set the desired temperature.

10 Rapid heating

To save time, you can use the rapid heating to shorten the preheat time.
Only use rapid heat-up when a temperature of over 100 °C has been set.
After rapid heating, it is best to use the following types of heating:

- 3D hot air
- Top/bottom heating

10.1 Setting rapid heating

To ensure an even cooking result, do not place the food in the cooking compartment until rapid heating has come to an end.

1. Use the function selector to select rapid heating.
2. Use the temperature selector to set the required temperature.
- ✔ Rapid heating starts after a few seconds.

✔ When the rapid heating process ends, an audible signal sounds and the heating indicator goes out.

3. Use the function selector to set a suitable type of heating.
4. Place the food in the cooking compartment.

11 Time-setting options

Your appliance has different time-setting options which ensure that operation can be controlled.

11.1 Overview of the time-setting options

You can use the ⏲ button to select the different time-setting options.

Time-setting option	Use
Timer 🔔	The timer can be set independently of the operation. It does not affect the appliance.
Cooking time I→I	If a cooking time has been set for the operation, the appliance stops heating automatically once this time has elapsed.
End →I	A time at which the operation ends can be set for the cooking time. The appliance starts up automatically so that it finishes cooking at the required time.
Time ⏲	Set the time.

11.2 Setting the timer

The timer runs independently of the appliance when it is in operation. The timer can be set up to 23 hours and 59 minutes regardless of whether the appliance is on or off. The timer has its own audible signal so that you can tell whether it is the timer or a cooking time which has elapsed.

Note: The timer and cooking time cannot count down at the same time. If a cooking time has already been set, you cannot set the timer.

1. Press ⏲ repeatedly until 🔔 is selected in the display.
2. Use the — or + button to set the timer duration.

Button	Recommended value
—	5 minutes
+	10 minutes

Up to 10 minutes, the timer duration can be set in 30-second increments. The time increments become bigger as the value increases.

✔ The timer starts and the timer duration begins to count down after a few seconds.
✔ An audible signal sounds and the timer duration is zero in the display when the timer duration has elapsed.

3. Once the timer duration has elapsed
   – Press any button to switch off the timer.

Changing the timer

The timer duration can be changed at any time.

Requirement: 🔔 is highlighted in the display.

▸ Use the — or + button to change the timer duration.
✔ The appliance applies the change after a few seconds.

Cancelling the timer

The timer duration can be cancelled at any time.

Requirement: 🔔 is highlighted in the display.

▸ Use the — button to reset the timer duration to zero.
✔ After a few seconds, the appliance applies the change and 🔔 goes out.

11.3 Setting the cooking time

The cooking time can be set to up to 23 hours and 59 minutes for the operation.

Requirement: The type of heating and temperature or setting have been set.

1. Press ⏲ repeatedly until I→I is selected in the display.
2. Use the — or + button to set the cooking time.

Additional programme	Recommended value
—	10 minutes
+	30 minutes

The cooking time can be set in one-minute increments up to one hour, and then in five-minute increments.

✔ After a few seconds, the appliance starts heating and the cooking time counts down.
✔ When the cooking time has elapsed, a signal sounds and the duration is at zero in the display.

3. When the cooking time has elapsed:
   – Press any button to end the signal prematurely.
   – To set another cooking time, press the + button.
   – When the dish is ready, switch off the appliance.

Changing the cooking time

The cooking time can be changed at any time.

Requirement: I→I is highlighted in the display.

▸ Change the cooking time using the — or + button.
✔ The appliance applies the change after a few seconds.

Cancelling the cooking time

The cooking time can be cancelled at any time.

Requirement: I→I is highlighted in the display.

▸ Reset the cooking time to zero using the — button.
✔ After a few seconds, the appliance applies the change and continues to heat without a cooking time.

11.4 Setting the end time

You can delay the time at which the cooking time is due to end by up to 23 hours and 59 minutes.

Notes

- The end time cannot be set for types of heating with grill function.
- In order to achieve a good cooking result, do not delay the end time once the appliance is already operating.
- Food will spoil if you leave it in the cooking compartment for too long.

Requirements

- The type of heating and temperature or setting have been set.
- A cooking time must be set.

1. Press ⏲ repeatedly until →| is selected in the display.
2. Press the — or + button.
✔ The display shows the calculated end time.
3. Use the — or + button to delay the end time.
✔ After a few seconds, the appliance applies the setting and the display shows the set end time.
✔ Once the calculated start time has been reached, the appliance starts heating up and the cooking time starts counting down.
✔ When the cooking time has elapsed, a signal sounds and the duration is at zero in the display.
4. When the cooking time has elapsed:
   – Press any button to end the signal prematurely.
   – To set another cooking time, press the + button.
   – When the dish is ready, switch off the appliance.

Changing the end time

In order to achieve a good cooking result, you can only change the set end time before operation starts and the cooking time starts counting down.

Requirement: →| is highlighted in the display.

▸ Use the — or + button to delay the end time.
✔ The appliance applies the change after a few seconds.

Cancelling the end time

You can delete the set end time at any time.

Requirement: →| is highlighted in the display.

▸ Reset the end time to the current time plus the set cooking time using the — button.
✔ After a few seconds, the appliance applies the change and starts heating up. The cooking time counts down.

11.5 Setting the time

Once the appliance has been connected to the mains or after a power cut, the time flashes in the display. The time starts at "12:00". Set the current time.

Requirement: The function selector must be set to the off ○ position.

1. Use — or + to set the time.
2. Press ⏲.
✔ The time that is set appears in the display.

12 Childproof lock

Secure the appliance to prevent children from accidentally switching it on or changing the settings.

Note: After a power cut, the childproof lock will no longer be active.

12.1 Activating and deactivating the childproof lock

Requirement: The function selector must be set to the off ○ position.

▸ To activate the childproof lock, press and hold the ⏲ button until SAFE appears in the display.
   – To deactivate the childproof lock, press and hold the ⏲ button until SAFE goes out in the display.

13 Cleaning and servicing

To keep your appliance working efficiently for a long time, it is important to clean and maintain it carefully.

13.1 Cleaning agent

To avoid damaging the different surfaces of the appliance, do not use unsuitable cleaning agents.

⚠ **WARNING – Risk of electric shock!**

An ingress of moisture can cause an electric shock.

▸ Do not use steam- or high-pressure cleaners to clean the appliance.

ATTENTION!

Unsuitable cleaning agents damage the surfaces of the appliance.

▸ Do not use aggressive or abrasive cleaning agents.
▸ Do not use cleaning products with a high alcohol content.
▸ Do not use hard scouring pads or cleaning sponges.
▸ Do not use any special cleaners if the appliance is still warm.

Using oven cleaner in a hot cooking compartment damages the enamel.

▸ Do not use oven cleaner in the cooking compartment when it is still warm.
▸ Remove all food remnants from the cooking compartment and the appliance door before you next heat up the appliance.

New sponge cloths contain residues from production.

▸ Wash new sponge cloths thoroughly before use.

Suitable cleaning agents

Only use cleaning agents that are suitable for the different surfaces on your appliance.

Follow the instructions on cleaning the appliance.
→ *"Cleaning the appliance", Page 18*

Appliance

Surface	Suitable cleaning agents	Information
Stainless steel	■ Hot soapy water ■ Special stainless steel cleaning products suitable for hot surfaces	To prevent corrosion, remove any limescale, grease, starch or albumin (e.g. egg white) stains on stainless steel surfaces immediately. Apply a thin layer of the stainless steel cleaning product.
Enamel, plastic, painted, and screen-printed surfaces E.g. control panel	■ Hot soapy water	Do not use a glass cleaning product or a glass scraper.
Knobs	■ Hot soapy water	Clean with a dish cloth and dry with a soft cloth. Do not remove or scrub.
Ceramic hob	■ Glass ceramic cleaner	Follow the cleaning instructions on the product packaging. Remove heavy soiling using a glass scraper.
Plinth drawer	■ Hot soapy water	Clean with a dishcloth.

Appliance cover

Area	Suitable cleaning agents	Information
Door panels	■ Hot soapy water	Do not use a glass scraper or steel wool. **Tip:** Remove the door panels in order to clean them thoroughly. → *"Appliance door", Page 20*
Door cover	■ Made of stainless steel: Stainless steel cleaner: ■ Made of plastic: Hot soapy water	Do not use a glass cleaning product or a glass scraper. **Tip:** To thoroughly clean the cover plate, remove the cover. → *"Appliance door", Page 20*
Door handle	■ Hot soapy water	In order to avoid stubborn dirt, remove descaling agents from the door handle immediately.
Door seal	■ Hot soapy water	Do not remove or scrub.

Hob

Area	Suitable cleaning agents	Information
Enamelled surfaces	■ Hot soapy water ■ Vinegar solution ■ Oven cleaner	Soak any heavily soiled areas and use a brush or steel wool. Leave the appliance cover open so that the hob can dry after it has been cleaned. **Notes** ■ Enamel burns at very high temperatures, causing minor discolouration. The functionality of the appliance is not affected by this. ■ The edges of thin baking trays cannot be completely enamelled and may be rough. This does not impair the corrosion protection. ■ Food residues leave a white coating on the enamelled surfaces. The coating does not pose a health risk. The functionality of the appliance is not affected by this. You can remove these residues with lemon juice.
Self-cleaning surfaces	-	Follow the instructions for self-cleaning surfaces. → *"Cleaning self-cleaning surfaces in the cooking compartment", Page 18*
Glass cover on the oven light	■ Hot soapy water	Use oven cleaner to remove very heavy soiling.

Area	Suitable cleaning agents	Information
Rails	■ Hot soapy water	Soak any heavily soiled areas and use a brush or steel wool. **Tip:** Remove the shelf supports for cleaning. → *"Rails", Page 19*
Accessories	■ Hot soapy water ■ Oven cleaner	Soak any heavily soiled areas and use a brush or steel wool. Enamelled accessories are dishwasher-safe.

13.2 Cleaning the appliance

In order to avoid damaging the appliance, clean your appliance only as specified, and using suitable cleaning products.

⚠ **WARNING – Risk of burns!**

The appliance and its parts that can be touched become hot during use.

- ▸ Caution should be exercised here in order to avoid touching heating elements.
- ▸ Young children under 8 years of age must be kept away from the appliance.

⚠ **WARNING – Risk of fire!**

Loose food remnants, fat and meat juices may catch fire.

- ▸ Before using the appliance, remove the worst of the food residues and remnants from the cooking compartment, heating elements and accessories.

Requirement: Read the information on cleaning agents.
→ *"Cleaning agent", Page 16*

1. Clean the appliance using hot soapy water and a dish cloth.
   – For some surfaces, you can use alternative cleaning agents.
   → *"Suitable cleaning agents", Page 17*
2. Dry with a soft cloth.

13.3 Cleaning controls

⚠ **WARNING – Risk of electric shock!**

An ingress of moisture can cause an electric shock.

- ▸ Do not detach the control knobs to clean them.
- ▸ Do not use wet sponge cloths.

1. Observe the information regarding the cleaning agents.
2. Clean using a damp sponge cloth and hot soapy water.
3. Dry with a soft cloth.

13.4 Cleaning self-cleaning surfaces in the cooking compartment

The back wall in the cooking compartment is self-cleaning. The self-cleaning surfaces are coated with a porous, matt ceramic layer and have a rough surface. When the appliance is in operation, the self-cleaning surfaces absorb splashes from roasting or grilling and break them down. If the self-cleaning surfaces no longer clean sufficiently during operation, heat up the cooking compartment specifically.

ATTENTION!

If the self-cleaning surfaces are not cleaned regularly, the surfaces may be damaged.

- ▸ If dark spots can be seen on the self-cleaning surfaces, heat up the cooking compartment.
- ▸ Do no use any oven cleaners or abrasive cleaning aids. If oven cleaner accidentally comes into contact with the self-cleaning surfaces, dab the surfaces immediately with water and a sponge cloth. Do not rub them.

1. Remove the accessories and cookware from the cooking compartment.
2. Detach the shelf supports and remove them from the cooking compartment.
   → *"Rails", Page 19*
3. Clean coarse dirt with hot soapy water and a soft cloth:
   – From the smooth enamel surfaces
   – From the inside of the appliance cover
   – From the glass cover on the oven lamp
   This prevents stubborn stains.
4. Remove any objects from the cooking compartment. The cooking compartment must be empty.
5. Use the function selector to set **3D hot air**.
6. Use the temperature selector to set the maximum temperature.

✔ The appliance starts heating after a few seconds.

7. Switch off the appliance after 1 hour.
8. Once the appliance has cooled down sufficiently, wipe the cooking compartment with a damp cloth.
   Note: Reddish marks may appear on the self-cleaning surfaces. This is not rust, but the residues of salty food. Nutrients such as sugars and proteins are not removed from the surface coating and may stick to the surface. These spots are not harmful and do not impair the cleaning ability of the self-cleaning surfaces.
9. Attach the shelf supports.
   → *"Rails", Page 19*

13.5 Potential stains

In order to avoid these stains, clean the hob with a damp dish cloth and dry it with a cloth.

Damage	Cause	Action
Stains	Limescale and water marks	Only clean the hob when it has cooled down sufficiently. You can use a cleaning agent suitable for glass-ceramic hobs.
Stains	Sugar, rice starch or plastic	Clean immediately. Use a glass scraper.

13.6 Cleaning the hob

Clean the hob after every use to stop cooking residues from getting burnt on.

Requirement: The hob must be cold. Do not allow the hob to cool down if it has sugar stains, rice starch, plastic or aluminium foil on it.

1. Remove heavy soiling using a glass scraper.
2. Clean the hob with a cleaning agent for glass ceramic.
   Follow the cleaning instructions on the packaging of the cleaning agent.

Tips

- You can achieve good cleaning results using a special sponge for glass ceramic.
- If you keep the base of the cookware clean, the hob surface remains in a good condition.

13.7 Cleaning the hob surround

If the hob frame is dirty or stained after use, clean this.

Note: Do not use a glass scraper.

1. Clean the hob frame with hot soapy water and a soft cloth.
   Wash new sponge cloths thoroughly before use.
2. Dry with a soft cloth.

14 Rails

To clean the rails and cooking compartment thoroughly, you can remove the shelf supports.

14.1 Unhooking the rails

⚠ **WARNING – Risk of burns!**

The rails can be very hot.

- ▸ Never touch the rails when they are hot.
- ▸ Allow the appliance to cool down.
- ▸ Keep children at a safe distance.

1. Hold the bottom of the shelf support and pull it slightly towards the front. Pull the extension pins in the lower section of the rails out of the mounting openings.

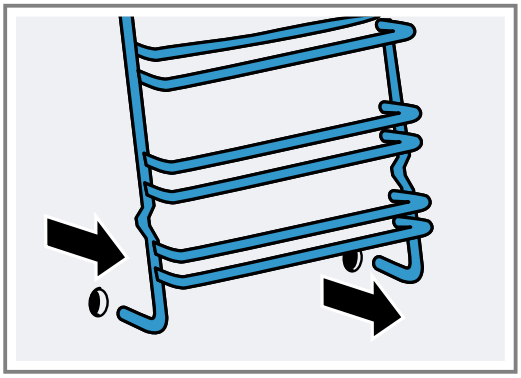

2. Pull the entire shelf support downwards first and then pull it forwards and remove it.

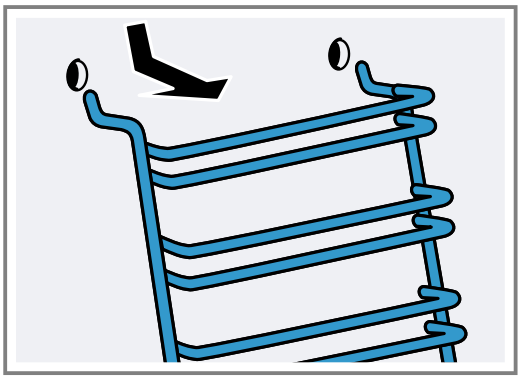

14.2 Attaching the rails

1. Place the two hooks at the top of the rail into the upper holes.

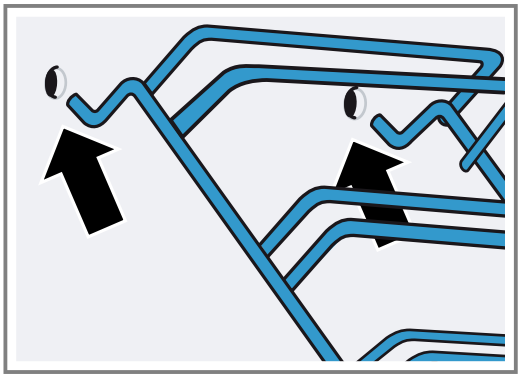

2. **ATTENTION!**
   Incorrect assembly
   - ▸ Never move the rail before the two hooks are secured fully in the upper holes. Otherwise the enamelled coating may be damaged and break.

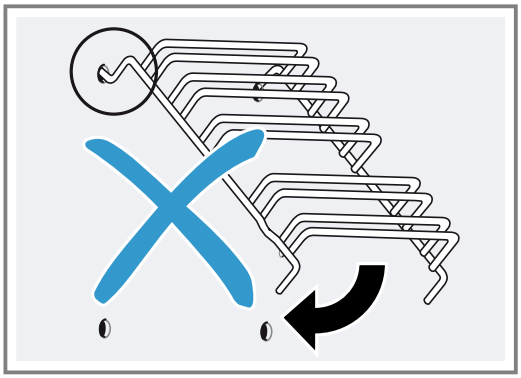

3. Both hooks must be inserted fully into the upper holes. Move the rail down slowly and carefully, and hook it into the lower holes.

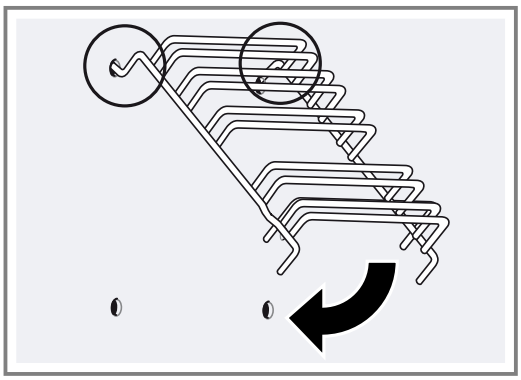

4. Hook both rails into the side walls of the oven.

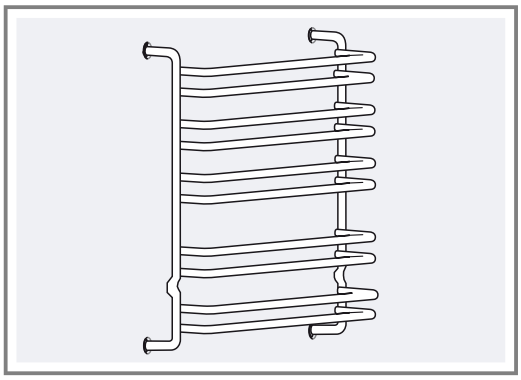

If the rails are fitted correctly, the distance between the two upper shelf positions is greater.

15 Appliance door

It is normally sufficient if you clean the outside of the appliance door. If the appliance door is very dirty on the inside and outside, you can remove the appliance door and clean it.

15.1 Door hinges

⚠ **WARNING – Risk of injury!**
When the hinges are not secured, they can snap shut with great force.

- If you open the appliance door, ensure that the locking levers are fully open or fully closed.

1. The oven door hinges each have a locking lever. When the locking levers are closed, the oven door is secured in place.

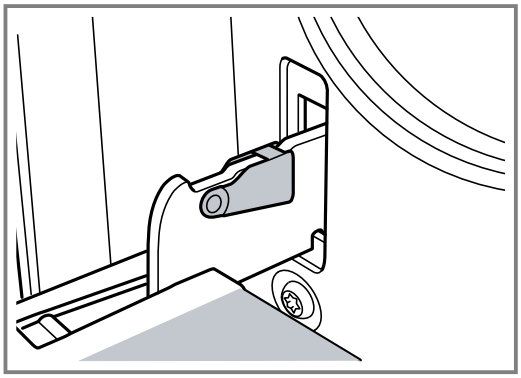

It cannot be detached.

2. When the locking levers are open in order to detach the oven door, the hinges are secured.

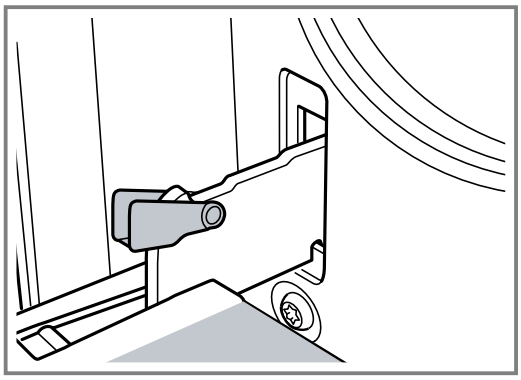

The hinges cannot snap shut.

15.2 Removing the appliance door

1. Open the oven door fully.
2. Open the locking levers on the left- and right-hand hinges.

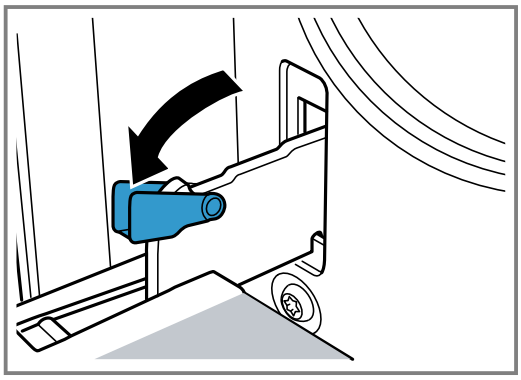

3. Close the oven door as far as the limit stop. Grip the left and right hand sides of the door with both hands. Close the door slightly more and remove it.

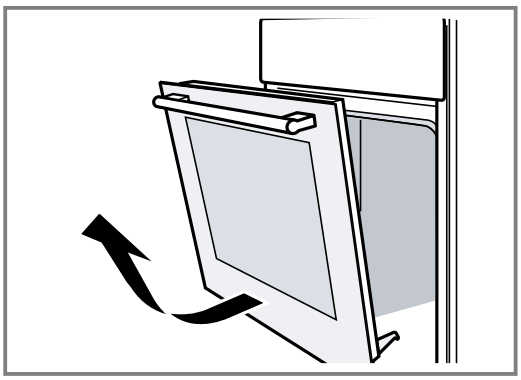

15.3 Removing the door panes

The glass panes of the oven door can be removed to make cleaning easier.

⚠ **WARNING – Risk of injury!**

Scratched glass in the appliance door may develop into a crack.

- Do not use any harsh or abrasive cleaners or sharp metal scrapers to clean the glass on the oven door, as they may scratch the surface.

The components in the appliance door may have sharp edges.

- Wear gloves.

1. Detach the oven door.
   → *"Removing the appliance door", Page 20*
2. Position it on a cloth with its handle pointing downwards.
3. To remove the upper cover of the oven door, press in the tabs on the left and right using your fingers. Pull out and remove the cover.

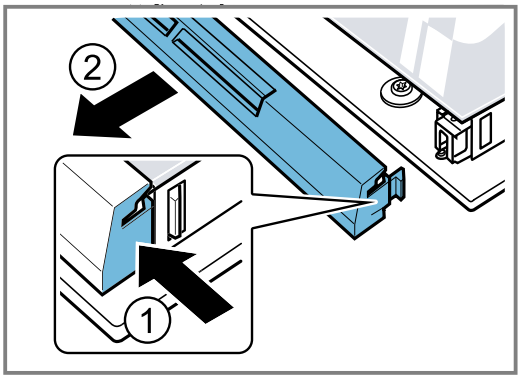

4. Lift the top pane up and out.

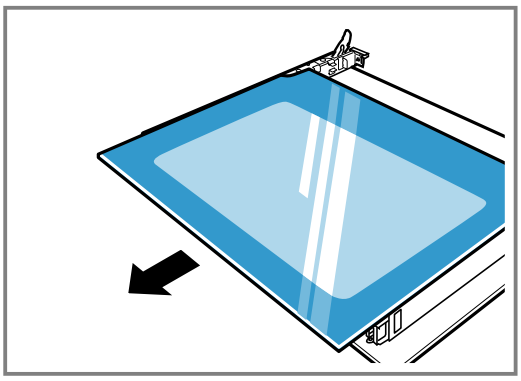

15.4 Fitting the door panes

1. Hold the top pane firmly on both sides and insert it at an angle towards the back.

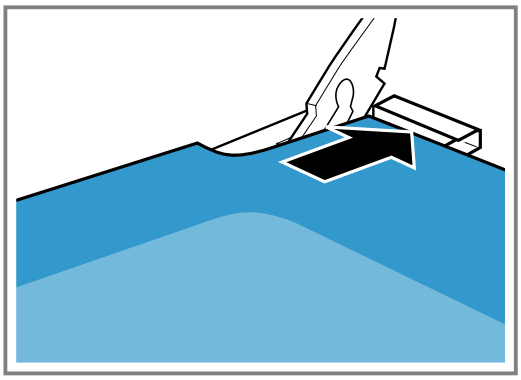

   Push the pane into both openings on the underside. The smooth surface must face outwards and the rough surface must face inwards.
2. Place the cover at the top of the oven door and press it on.
   The mounting brackets must lock in place on both sides.
3. Attach the oven door.
   → *"Attaching the appliance door", Page 21*

Note: Only use the oven once the glass panes have been correctly fitted.

15.5 Attaching the appliance door

Reattach the oven door in the reverse sequence to removal.

⚠ **WARNING – Risk of injury!**

The oven door might accidentally fall or a hinge may suddenly snap shut.

- In this case, do not hold onto the hinge. Call customer service.

1. When attaching the oven door, ensure that both hinges are inserted in the opening direction.

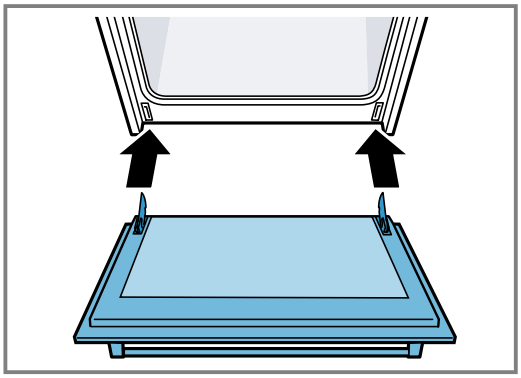

2. The notch on the hinge must engage on both sides.

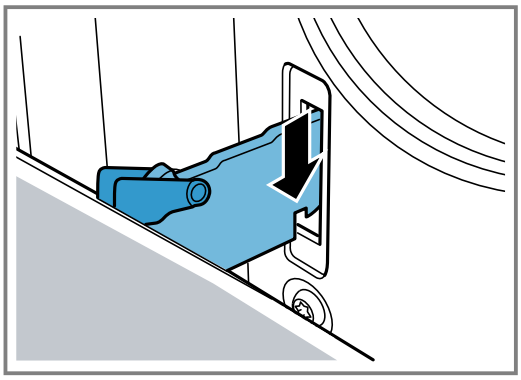

3. Close both locking levers again.

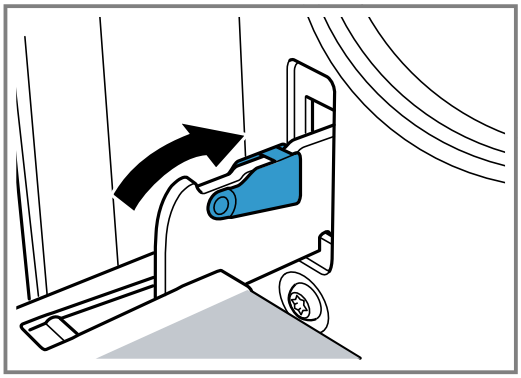

4. Close the appliance door.

15.6 Additional door safety

Additional safety devices have been fitted to prevent contact with the oven doors. Always attach these safety devices when children could come near the oven. You can purchase this special accessory from after-sales service. 11023590

⚠ **WARNING – Risk of burns!**

During long cooking times, the oven door may become very hot.

- Supervise small children when the oven is in operation.

16 Troubleshooting

You can rectify minor faults on your appliance yourself. Read the troubleshooting information before contacting after-sales service. This will avoid unnecessary costs.

⚠ **WARNING – Risk of injury!**

Improper repairs are dangerous.

- Repairs to the appliance should only be carried out by trained specialist staff.
- If the appliance is defective, call Customer Service. → *"Customer Service", Page 24*

⚠ **WARNING – Risk of electric shock!**

Improper repairs are dangerous.

- Repairs to the appliance should only be carried out by trained specialist staff.
- Only use genuine spare parts when repairing the appliance.
- If the power cord of this appliance is damaged, it must be replaced by the manufacturer, the manufacturer's Customer Service or a similarly qualified person in order to prevent any risk.

16.1 Malfunctions

Fault	Cause and troubleshooting
The appliance is not working.	The mains plug of the power cord is not plugged in. ▸ Connect the appliance to the power supply.
	The circuit breaker in the fuse box has tripped. ▸ Check the circuit breaker in the fuse box.
	There has been a power cut. ▸ Check whether the lighting in your room or other appliances are working.
The appliance does not switch off fully at the end of a cooking time.	At the end of a cooking time, the appliance stops heating up. The oven light and cooling fan do not switch off. For types of heating with air recirculation, the fan continues to run in the back wall of the cooking compartment. ▸ Turn the function selector to the off position. ✔ The appliance is switched off. ✔ The oven light and the fan in the back wall are switched off. ✔ The cooling fan switches off automatically as soon as the appliance has cooled down.

Fault	Cause and troubleshooting
The time flashes in the display.	There has been a power cut. ▸ Reset the time. → *"Setting the time", Page 16*
SAFE lights up in the display and no settings can be made on the appliance.	Childproof lock is activated. ▸ Use ⏲ to deactivate childproof lock. → *"Childproof lock", Page 16*
A message with E appears in the display, e.g. E05-32.	Electronics fault **1.** Press ⏲. – If necessary, reset the time on the clock. ✔ If the fault was a one-off, the error message disappears. **2.** If the error message appears again, call the after-sales service. State the exact error message and the E no. for your appliance in full. → *"Customer Service", Page 24*

16.2 Replacing the oven light bulb

If the light in the cooking compartment fails, change the oven light bulb.

Note: Heat-resistant, 25-watt, 230 V halogen bulbs are available from the after-sales service or specialist retailers. Only use these bulbs. Hold the new halogen bulbs only with a clean, dry towel. This increases the service life of the bulb.

⚠ **WARNING – Risk of burns!**

The appliance and its parts that can be touched become hot during use.

- ▸ Caution should be exercised here in order to avoid touching heating elements.
- ▸ Young children under 8 years of age must be kept away from the appliance.

⚠ **WARNING – Risk of electric shock!**

When changing the bulb, the bulb socket contacts are live.

- ▸ Before replacing the bulb, ensure that the appliance is switched off in order to prevent a potential electric shock.
- ▸ Also unplug the appliance from the mains or switch off the circuit breaker in the fuse box.

Requirements

- The appliance is disconnected from the power supply.
- The cooking compartment has cooled down.
- You have a new halogen bulb to replace the old one.

1. Place a tea towel in the cooking compartment to prevent damage.
2. Turn the glass cover anti-clockwise to remove it.
3. Pull out the halogen bulb without turning it.

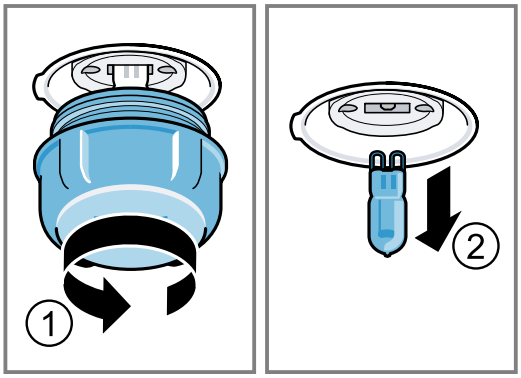

4. Insert the new halogen bulb and press it firmly into the socket.
   Make sure the pins are positioned correctly.
5. Depending on the appliance model, the glass cover may have a sealing ring. Attach the sealing ring.
6. Screw in the glass cover.
7. Remove the tea towel from the cooking compartment.
8. Connect the appliance to the power supply.

17 Transportation and disposal

You can find out here how to prepare your appliance for transportation. You will also find out how to dispose of old appliances.

17.1 Disposing of old appliance

Valuable raw materials can be reused by recycling.

- ▸ Dispose of the appliance in an environmentally friendly manner.
  Information about current disposal methods are available from your specialist dealer or local authority.

This appliance is labelled in accordance with European Directive 2012/19/EU concerning used electrical and electronic appliances (waste electrical and electronic equipment - WEEE).
The guideline determines the framework for the return and recycling of used appliances as applicable throughout the EU.

17.2 Transporting the appliance

Keep the original appliance packaging. Only transport the appliance in the original packaging. Observe the transport arrows on the packaging.

1. Secure all moving parts in and on the appliance using adhesive tape that can be removed without leaving any traces.
2. Slide all accessories, such as baking trays, into the corresponding slots with thin cardboard at the edges, in order to avoid damaging the appliance.
3. Place cardboard or similar between the front and rear side to prevent knocks against the inside of the door glass.
4. Secure the door and, if available, the top cover to the appliance sides using adhesive tape.

If the original packaging is no longer available

1. In order to guarantee sufficient protection against any transport damage, pack the appliance in protective packaging.
2. Always transport the appliance upright.
3. Do not hold the appliance by the door handle or the connections on the rear, as these could be damaged.
4. Do not place any heavy objects on the appliance.

18 Customer Service

Detailed information on the warranty period and terms of warranty in your country is available from our after-sales service, your retailer or on our website.
If you contact Customer Service, you will require the product number (E-Nr.) and the production number (FD) of your appliance.
The contact details for Customer Service can be found in the enclosed Customer Service directory or on our website.
This product contains light sources from energy efficiency class G.

18.1 Product number (E-Nr.) and production number (FD)

You can find the product number (E-Nr.) and the production number (FD) on the appliance's rating plate. You will see the rating plate with these numbers if you open the appliance door.

Make a note of your appliance's details and the Customer Service telephone number to find them again quickly.

19 How it works

Here, you can find the ideal settings for various types of food as well as the best accessories and cookware. These recommendations are perfectly tailored to your appliance.
Detailed baking tables for your appliance and tips for baking with your appliance can be found in the instructions on the Internet:
www.siemens-home.bsh-group.com

19.1 Cooking tips

Observe this information when preparing food.

- The temperature and cooking time depend on the amount of food and the recipe. Settings ranges are specified for this reason. Select the lower value first.
- The setting values apply to food placed in the cooking compartment while the cooking compartment is still cold.
  Do not place accessories into the cooking compartment until it has finished preheating.
- Remove any accessories that are not being used from the cooking compartment.
- Ensure that the accessory slides in the right way round.

19.2 Notes on baking

When baking, use the shelf positions indicated.

Baking on one level	Shelf position
Rising pasta/baked goods or tin on the wire rack	2
Flat pasta/baked items or in the baking tray	2–3

Baking on two or more levels	Shelf position
Universal pan Baking tray	3 1
Baking tins on the wire rack: First wire rack Second wire rack	Shelf position 3 1

Baking on three levels	Shelf position
Baking trays Universal pan Baking trays	5 3 1

Notes

- When baking on several layers, use hot air. Different food that is placed in the oven at the same time will not necessarily be ready at the same time.
  In such cases, you can remove the cooked food and continue to cook the other baking tray. If necessary, you can change the position and direction of the baking trays.
- Position baking tins/dishes either next to one another or offset on different shelves so that they are not directly one above the other in the cooking compartment. You can cut energy use by cooking different items at the same time.
- For best results, we recommend using dark-coloured metal baking tins.

19.3 Notes on roasting and grilling

The setting values are based on the assumption that unstuffed, chilled, ready-to-roast poultry, meat or fish is placed into a cold cooking compartment.

ATTENTION!

Acidic food may damage the grid

- ▸ Do not place acidic food, such as fruit or food with an acidic marinade directly on the pan support.
- The larger the poultry, meat or fish, the lower the temperature and the longer the cooking time.
- Turn the poultry, meat or fish after approx. 1/2 to 2/3 of the time listed.
- Add a little liquid to the poultry in the cookware. Cover the base of the cookware with approx. 1–2 cm of liquid.
- When you turn poultry, ensure that the breast side or skin side is underneath to begin with.
- Use tongs to turn the pieces of food you are grilling. If you pierce the meat with a fork, the juices will run out and it will become dry.
- Only add salt to steaks once they have been grilled. Salt draws water from the meat.

Information for those allergic to nickel

In rare cases, small amounts of nickel may pass into the food.

19.4 List of foods

Food	Accessories/cookware	Shelf position	Type of heating	Temperature in °C/grill setting	Cooking time in mins
Sponge cake, simple	Vienna ring tin/loaf tin	2		160–180	50–60
Sponge cake, simple, 2 levels	Vienna ring tin/loaf tin	3+1		140–160	60–80
Fruit tart or cheesecake with shortcrust pastry base	Springform cake tin, diameter 26 cm	2		160–180	70–90
Sponge flan, 6 eggs	Springform cake tin Ø 28 cm	2		160–170	35–45
Swiss roll	Universal pan	2		170–190[1]	15–20
Shortcrust tart with moist topping	Universal pan	2		160–180	60–90
Muffins	Muffin tray on wire rack	2		170–190	20–40
Small baked items	Universal pan	3		150–170	25–35
Biscuits	Universal pan	3		140–160	20–30
Biscuits, 2 levels	Universal pan + Baking tray	3+1		130–150	25–35
Biscuits, 3 levels	2x Baking tray + Universal pan	5+3+1		130–150	30–40
Bread, 1000 g, in a loaf tin or free-form	Universal pan or Loaf tin	2		200–220	35–50
Pizza, fresh, thin-crust	Universal pan	2		250-270[1]	15-25
Quiche, flan	Tart dish or tin	1		210–230	40–50
Bake, savoury, fresh, cooked ingredients	Ovenproof dish	2		200–220	30–60
Chicken, 1.3 kg, unstuffed	Cookware without lid	2		200–220	60–70

[1] Preheat the appliance.
[2] At the start, add liquid to the cookware so that at least 2/3 of the joint is covered in liquid
[3] Turn the dish 2/3 of the way through the cooking time.
[4] Slide the universal pan underneath the wire rack.
[5] Do not turn the food. Cover the base with water.

Food	Accessories/cookware	Shelf position	Type of heating	Temperature in °C/grill setting	Cooking time in mins
Small chicken portions, 250 g each	Cookware without lid	3		220–230	30–35
Goose, unstuffed, 3 kg	Cookware without lid	2		170–190	120–140
Fillet of beef, medium, 1 kg	Cookware without lid	3		210–220	45–55
Pot-roasted beef, 1.5 kg	Cookware with lid	2		200–220	100–120[2]
Sirloin, medium, 1.5 kg	Cookware without lid	2		200–220	60–70
Hamburger, 3–4 cm thick	Wire rack	4		3[3]	25–30[4]
Leg of lamb, boned, medium, 1.5 kg	Cookware without lid	2		170–190	70–80[5]
Fish, grilled, whole, 300 g, e.g. trout	Wire rack	2		2	20–25[4]

[1] Preheat the appliance.
[2] At the start, add liquid to the cookware so that at least 2/3 of the joint is covered in liquid
[3] Turn the dish 2/3 of the way through the cooking time.
[4] Slide the universal pan underneath the wire rack.
[5] Do not turn the food. Cover the base with water.

19.5 Cooking more than one dish/course at a time

You can cook more than one dish at a time in your appliance. This way, the appliance is able to use less energy and you are able to use the cooking positions efficiently.

Note: The cooking result depends on the quantity of food and the size of the ovenware.
For pasta bakes, use wide, shallow cookware.
If you want to follow one of your own recipes, use the settings listed in the table for similar food as reference.

Observe the following explanations.

- To cook the food, place it into the appliance at levels 1, 3 and 5.
- Place the cookware on the wire rack at the specified level.
- Once the time specified in the table has elapsed, remove the accessory containing the food from the oven.

⚠ **WARNING – Risk of injury!**
If hot glass cookware is placed on a wet or cold surface, the glass may shatter.
- ▸ Place hot glass ovenware on a dry mat after cooking.

Cooking more than one dish/course at a time

Meal	Accessory/cookware	Shelf position	Type of heating	Temperature in °C	Cooking time, minutes
Fish, whole Muffins, x 12 Pasta bake	Baking tray + Universal pan + Ovenproof dish	5+3+1		160	60 30–40 50–60

19.6 Yoghurt

You can also use your appliance to make your own yoghurt.

Making yoghurt

1. Remove the accessories and shelves from the cooking compartment.
2. Heat 1 litre of milk (3.5% fat) to 90 °C on the hob and then leave it to cool down to 40 °C. Only heat UHT milk to 40 °C.
3. Stir 30 g yoghurt into the milk.
4. Pour the mixture into small containers, e.g. small jars with lids.
5. Cover the containers with film, e.g. cling film.
6. Place the containers on the cooking compartment floor.
7. Use the recommended settings when configuring the appliance settings.
8. After making the yoghurt, leave it to cool in the refrigerator.

Yoghurt

Meal	Accessory/cookware	Shelf position	Type of heating/ function	Temperature in °C	Cooking time, minutes
Yoghurt	Cup/jar	Cooking compartment floor		-	4–5 hours

EN Manufactured by BSH Hausgeräte GmbH under the trademark licence of Siemens AG

BSH Hausgeräte GmbH
Carl-Wery-Straße 34
81739 München, GERMANY
siemens-home.bsh-group.com

9001709736 (031204)
en