BOSCH

Register your appliance and join the Bosch family of perks:
Enregistrez votre appareil et profitez des avantages Bosch :
registerbosch.com

MyBosch

Dishwasher

SHE53C82N

[en-us] Use and Care Manual

You can find additional information and explanations online. Scan the QR code on the title page.

Table of contents

1 IMPORTANT SAFETY INSTRUCTIONS 4
1.1 Safety definitions 4
1.2 General information 4
1.3 Intended use 4
1.4 Restrictive use 5
1.5 Grounding instructions 5
1.6 Safe use 5
1.7 Risk to children 7
1.8 State of California Proposition 65 Warnings 7

2 Preventing material damage 8

3 Environmental protection and energy-saving 8
3.1 Saving energy 8
3.2 AquaSensor 8

4 Familiarizing yourself with your appliance 9
4.1 Appliance 9
4.2 Controls 11

5 Dishwasher Cycles 12
5.1 Energy Guide 13
5.2 Favorite ☆ 14

6 Options 14

7 Features 15
7.1 Upper rack 15
7.2 Lower rack 16
7.3 Silverware Basket 16
7.4 Silverware drawer 16
7.5 Cup shelf 16
7.6 Flip tines 17
7.7 Rack heights 17

8 Before using for the first time .. 18
8.1 Initial use 18

9 Rinse aid system 18
9.1 Rinse aid 18
9.2 Setting the amount of rinse aid 19
9.3 Switching off the amount of rinse aid to be dispensed 19

10 Detergent 19
10.1 The correct detergents 19
10.2 Incompatible detergents 20
10.3 Information on Detergent 20
10.4 Adding Detergent 20
10.5 Detergent table 21

11 Dishware 21
11.1 Damage to glass and dishware 22
11.2 Loading dishware 22
11.3 Removing dishware 23
11.4 Loading patterns 23

12 Basic Operation 25
12.1 Protection against unintentional operation [1] 25
12.2 Switching on the appliance .. 25
12.3 Setting a cycle 25
12.4 Setting options 25
12.5 Setting the time delay 25
12.6 Starting the wash cycle 25
12.7 Activating the button lock 26
12.8 Deactivating the button lock 26
12.9 Interrupting the wash cycle ... 26
12.10 Terminating the wash cycle 26
12.11 Switching off the appliance 26

13 Basic settings 26

[1] Depending on the appliance specifications

13.1 Overview of the basic settings 26

14 Home Connect® 29

14.1 Setting up Home Connect® 29

14.2 Home Connect® settings 29

14.3 Remote Start 30

14.4 Smart Start [1] 30

14.5 Remote Diagnostics 30

14.6 Data Protection 30

15 Cleaning and maintenance 31

15.1 Cleaning the tub 31

15.2 Cleaning agent 31

15.3 Tips on appliance care 31

15.4 Filter system 31

15.5 Cleaning the spray arms 32

16 Troubleshooting 33

16.1 Clean drain pump 42

17 Transportation, storage and disposal 43

17.1 Removing the appliance 43

17.2 Vacation and Storage 43

17.3 Transporting the appliance ... 44

17.4 Disposal of your old appliance 44

18 Customer Service 44

18.1 Model number (E-Nr.), production number (FD) and consecutive numbering (Z-Nr.) 45

19 Technical specifications 45

19.1 Information regarding Free and Open Source Software .. 45

Recursos y ayuda en línea en español 47

[1] Depending on the appliance specifications

IMPORTANT SAFETY INSTRUCTIONS

READ AND SAVE THESE INSTRUCTIONS

Read all of the instructions carefully before using the appliance. In order to reduce the risk of fire, electric shocks and personal injuries when using the appliance, follow the basic safety precautions, including the following safety instructions.

1.1 Safety definitions

Here you can find explanations of the safety signal words used in this manual.

WARNING
This indicates that death or serious injuries may occur as a result of non-observance of this warning.

CAUTION
This indicates that minor or moderate injuries may occur as a result of non-observance of this warning.

NOTICE
This indicates that damage to the appliance or property may occur as a result of non-compliance with this advisory.

Note: This alerts you to important information.

1.2 General information

To reduce the risk of fire, electrical shock, or serious injury, observe the following.

- Read and understand all instructions before using the appliance.
- Keep the provided documents in a safe place for future reference or for the next owner.
- Do not connect the appliance if it has been damaged in transit.
- Product damage and/or injury could result from the use of unqualified service technicians or non-original parts. All repairs should be performed by an authorized service provider using only original equipment factory replacement parts.
- NSF/ANSI 184 Certified residential dishwashers are not intended for licensed food establishments.

1.3 Intended use

Only use this appliance:

- for cleaning household dishware.
- in closed rooms in the home and with similar applications, e.g.: in canteens in stores, offices and other work environments; in agricultural businesses;

IMPORTANT SAFETY INSTRUCTIONS
READ AND SAVE THESE INSTRUCTIONS

use by customers in hotels, motels and other typical home environments; in bed and breakfasts.
- Up to an altitude of 13,100 ft (4000 m) above sea level.

1.4 Restrictive use

This appliance is not intended for use by persons (including children) with reduced physical, sensory or mental capabilities, or lack of experience and knowledge, unless they have been given supervision or instruction concerning use of the appliance by a person responsible for their safety.

1.5 Grounding instructions

This appliance must be grounded to a metal, permanent wiring system or an equipment grounding conductor must be run with the circuit conductors and connected to the equipment grounding terminal or lead on the dishwasher. See the Installation Instructions included with this dishwasher for more information on electrical requirements.

WARNING

Improper connection of the equipment grounding conductor can result in risk of electric shock.

- ▶ This appliance must be grounded. In the event of a malfunction or breakdown, grounding will reduce the risk of electric shock by providing a path of least resistance for electric current. This appliance is equipped with a cord having an equipment-grounding conductor. Check with a qualified electrician or authorized service representative if you are in doubt whether the appliance is properly grounded.

1.6 Safe use

Follow these safety instructions when using the appliance.

WARNING

To reduce the risk of serious injury, observe the following.

- ▶ Read all instructions before using this dishwasher.
- ▶ Use this dishwasher only for its intended function, which is the washing of household dishware and kitchenware rated as dishwasher safe.
- ▶ Only use detergents or rinsing agents recommended for use in a dishwasher, and keep them out of the reach of children.
- ▶ Do not abuse, sit or stand on the door or dish racks of the dishwasher.

IMPORTANT SAFETY INSTRUCTIONS

READ AND SAVE THESE INSTRUCTIONS

WARNING

Under certain conditions, hydrogen gas may be produced in a hot water system that has not been used for two weeks or more. Hydrogen gas is explosive.

- Before using a dishwasher that is connected to a hot water system that has been unused for two weeks or longer, turn on all hot water faucets and let the water flow from each for several minutes. This will release any accumulated hydrogen gas. As the gas is explosive, do not smoke or use an open flame during this time.

WARNING

To avoid risk of electric shock, observe the following.

- Only use the appliance in enclosed residential space according to the installation manual.
- Never expose the appliance to intense heat or humidity.
- Do not use any steam cleaners or high-pressure cleaners to clean this appliance. If not followed, excess moisture can accumulate.

WARNING

To avoid risk of injury, when loading items to be washed, observe the following.

- Locate sharp items so they are not likely to damage the door seal.
- Load knives and other sharp utensils with their handles up to reduce the risk of cut-type injuries.
- Do not wash plastic items unless they are marked "dishwasher safe" or the equivalent. For plastic items not so marked, check the manufacturer's recommendations.
- Do not operate your dishwasher unless all enclosure panels are in place.
- Do not tamper with or override controls and interlocks.

WARNING

For safe care and operation of your appliance, observe the following.

- Follow the safety instructions and directions for use on the detergent and rinse aid product labels.
- Do not use harsh chemicals such as bleach-based products to clean your dishwasher. Some bleach-based products can damage your dishwasher and may present health hazards!
- Always use caution when opening the door during or following a wash cycle as hot water or steam may escape. Do not fully open the door until water noises have stopped and steam has subsided.
- To avoid floor damage and possible mold growth, do not allow wet areas to remain around or under the dishwasher.

IMPORTANT SAFETY INSTRUCTIONS

READ AND SAVE THESE INSTRUCTIONS

NOTICE

Water and power shut off

- It is highly recommended for the end user to become familiar with the procedure to shut off the incoming water supply and the procedure to shut off the incoming power supply. See the installation instructions or contact your installer for more information.

1.7 Risk to children

Follow these safety instructions if there are children in your home.

WARNING

To reduce risk of injury to children, observe the following.

- Do not allow children to play in or on the dishwasher.
- When children become old enough to operate the appliance, it is the responsibility of the parents/legal guardians to ensure the children are instructed in safe practices by qualified persons.
- Remove the dishwasher door to the washing compartment when removing an old dishwasher for service or discarding.

1.8 State of California Proposition 65 Warnings

This product may contain a chemical known to the State of California, which can cause cancer or reproductive harm. Therefore, the packaging of your product may bear the following label as required by California:

STATE OF CALIFORNIA PROPOSITION 65 WARNING:

WARNING

Cancer and Reproductive Harm - **www.P65Warnings.ca.gov**

2 Preventing material damage

NOTICE

Harsh chemicals such as chlorine or bleach-based cleaning agents can damage your dishwasher.

- ▸ Do not use harsh chemicals such as chlorine or bleach-based cleaning agents to clean your dishwasher.

Certain cleaning products may damage the appliance.

- ▸ Do not use a steam cleaner.
- ▸ So as not to scratch the finish on the appliance, do not use sponges with a rough surface or abrasive cleaning agents.

Avoid stainless steel polish

- ▸ Do not use stainless steel polish on an anti-fingerprint finish or a black stainless finish.

Escaping water vapor can damage cabinetry.

- ▸ When the program ends, let the appliance cool down a bit before opening the door.

Protect your appliance from the elements.

- ▸ Protect against freezing to avoid possible damage to the fill valve. Damage caused by freezing is not covered by the warranty.

Avoid dishwasher damage

- ▸ Do not load the dishwasher with paper products, plastic bags, packing materials or anything other than normal, dishwasher safe dishware and kitchenware.

3 Environmental protection and energy-saving

3.1 Saving energy

If you follow these instructions, your appliance will use less power and water.

Use the Normal program.

- ✔ The Normal program is energy-efficient and environmentally friendly.
  → *"Dishwasher Cycles", Page 12*

3.2 AquaSensor

The AquaSensor is an optical measuring device (light barrier) which measures the turbidity of the washing water. You can save water with the AquaSensor.

The operation of the AquaSensor depends on the selected cycle. If the soiling level is high, the washing water is drained off and replaced with fresh water. If the soiling level is lower, the washing water is used in the next rinse, so reducing water consumption by 3-6 liters. In the Auto cycles the temperature and run time are additionally adjusted to the level of soiling.

4 Familiarizing yourself with your appliance

4.1 Appliance

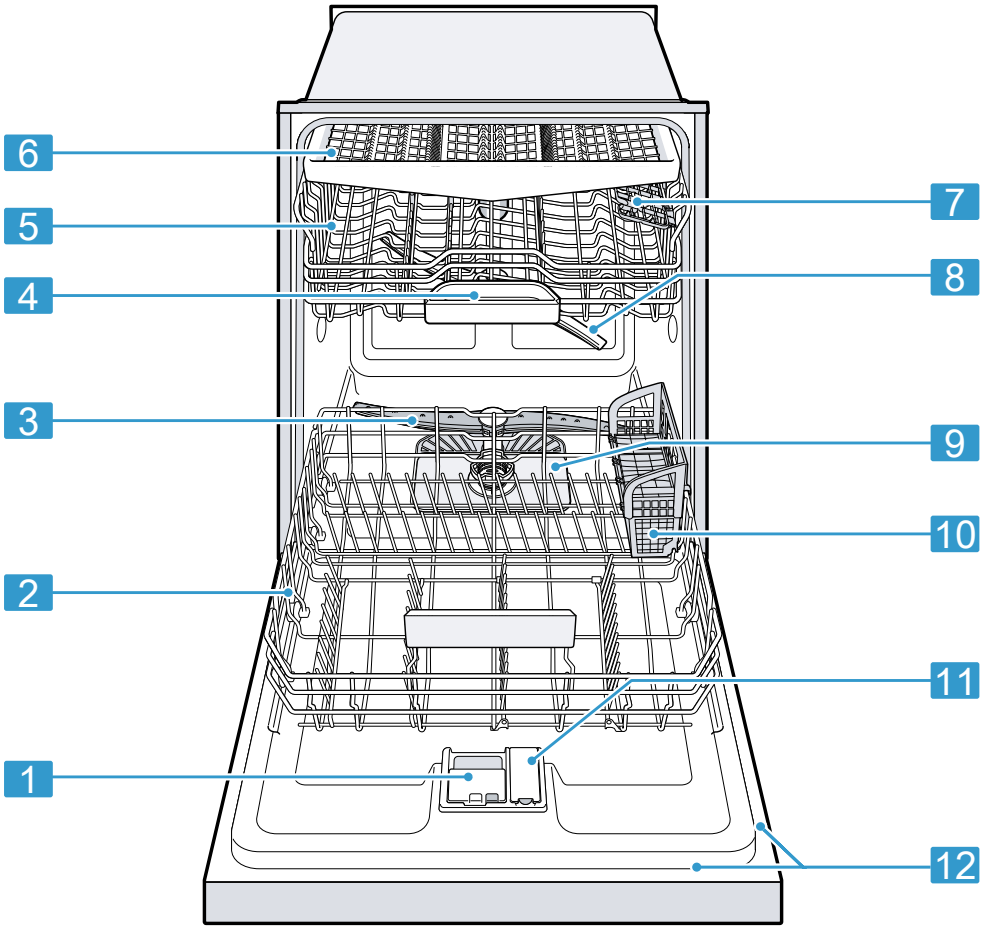

1	Detergent dispenser	Add detergent to the detergent dispenser.
2	Lower rack	Lower rack →*Page 16*
3	Lower spray arm	The lower spray arm washes the dishware in the lower rack. If the dishware has not been washed properly, clean the spray arms. → *"Cleaning the spray arms", Page 32*

4	Detergent tab collecting tray	During the wash cycle, detergent tabs automatically drop out of the detergent dispenser into the tab collecting tray, where they can dissolve fully.
5	Upper rack	Upper rack →*Page 15*
6	Silverware drawer	Silverware drawer →*Page 16*
7	Cup shelf [1]	Cup shelf →*Page 16*
8	Upper spray arm	The upper spray arm washes the dishware in the upper rack. If the dishware has not been washed properly, clean the spray arms. → *"Cleaning the spray arms", Page 32*
9	Filter system	Filter system →*Page 31*
10	Silverware basket	Silverware basket → *"Silverware Basket", Page 16*
11	Dispenser for rinse aid	Rinse aid is added to the dispenser for rinse aid. → *"Rinse aid system", Page 18*
12	Rating plate	Rating plate with E number and FD number →*Page 45*. You will need this data to contact Customer service →*Page 44*.

[1] Depending on the appliance specifications

4.2 Controls

You can use the control panel to configure all functions of your appliance and to obtain information about the operating status.

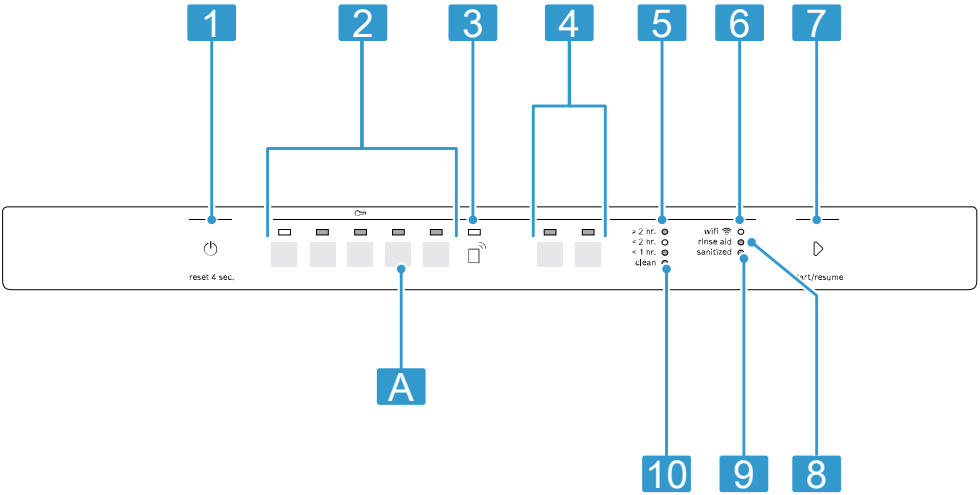

A	Button A	If you press A for approx. 3 seconds, you can open the basic settings.
1	ON/OFF button and reset button Reset 4 sec.	Switching on the appliance → *"Switching on the appliance", Page 25* Switching off the appliance → *"Switching off the appliance", Page 26* Terminating the cycle → *Page 26*
2	Cycle buttons	Cycles → *Page 12*
3	Remote Start	→ *"Remote Start", Page 30*
4	Cycle buttons and options	Cycles → *Page 12* Options → *Page 14*
5	Display for remaining time	The displays show the remaining time of the wash cycle.
6	WLAN display	Home Connect → *Page 29*
7	Start button Start	Starting the wash cycle → *"Starting the wash cycle", Page 25*
8	Rinse aid refill indicator	Rinse aid system → *"Adding rinse aid", Page 18*

9	Display Sanitize	The indicator lights up at the end of the program when sanitized.
10	Display Clean	Once the wash cycle has ended, the display lights up.

5 Dishwasher Cycles

Below is an overview of the different cycles available on your dishwasher.
The running time may vary depending on the cycle selected. The running time depends on the water temperature, the quantity of dishware, the level of dirt and the option selected. The running time will change if the rinse aid system is switched off or rinse aid needs to be added. The consumption values relate to normal conditions and a water hardness of 16 - 20 °E. Different influencing factors such as water temperature or pipe pressure may result in deviations.

Cycle	Purpose	Cycle sequence	Usage 1) Hour/min. 2) Electrical/kWH 3) Water/gal
Heavy	Dishware: ▪ Washing pots and pans, non-fragile dishware and silverware Level of soiling: ▪ Removing stubborn burned or dried on food remnants containing starch and protein.	Intensive ▪ Pre-Rinse ▪ Cleaning 151 °F – 160 °F ▪ Intermediate rinse ▪ Final rinse 162 °F ▪ Drying	▪ 1) 1:50 - 2:20 ▪ 2) 1.100 - 1.150 ▪ 3) 4.9 - 6.4
Auto	Dishware: ▪ Cleaning mixed dishware and silverware. Level of soiling: ▪ Removing common household food remnants lightly dried-on.	Sensor controlled: ▪ Optimized by sensors depending on the soiling of the rinse water.	▪ 1) 1:45 - 2:09 ▪ 2) 0.880 - 0.970 ▪ 3) 3.4 - 6.4 **Note:** The displayed cycle time indicates an average value.

Cycle	Purpose	Cycle sequence	Usage 1) Hour/min. 2) Electrical/kWH 3) Water/gal
Normal	Dishware: ▪ Cleaning mixed dishware and silverware. Level of soiling: ▪ Removing common household food remnants lightly dried-on.	Most economical cycle: ▪ Pre-Rinse ▪ Cleaning 113 °F – 131 °F ▪ Intermediate rinse ▪ Final rinse 154 °F ▪ Drying	▪ 1) 2:10 - 2:15 ▪ 2) 0.770 - 0.850 ▪ 3) 2.3 - 5.5
Speed 60®	Dishware: ▪ Cleaning mixed dishware and silverware. Level of soiling: ▪ Removing common household food remnants lightly dried-on.	Time-optimized: ▪ Cleaning 122 °F ▪ Intermediate rinse ▪ Final rinse 158 °F ▪ Drying	▪ 1) 1:00 ▪ 2) 0.710 ▪ 3) 3.8
Favorite	-	-	▪ 1) 1:45 - 2:09 ▪ 2) 0.880 - 0.970 ▪ 3) 3.4 - 6.4

5.1 Energy Guide

The Energy Guide label was based on the Normal soil sensing cycle. The unit was tested without any rinse aid (liquid) in the rinse aid dispenser. A single dose of detergent was inserted into the detergent dispenser, with no detergent being used in the prewash. The unit was not subjected to truncated testing per the definitions in the test procedure. We recommend that dish loads such as the one in the energy certification test have the rack position set in the highest position. Recommended for daily, regular or typical use to completely wash a full load of normally soiled dishes.

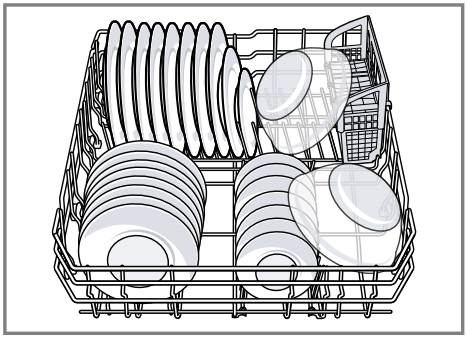

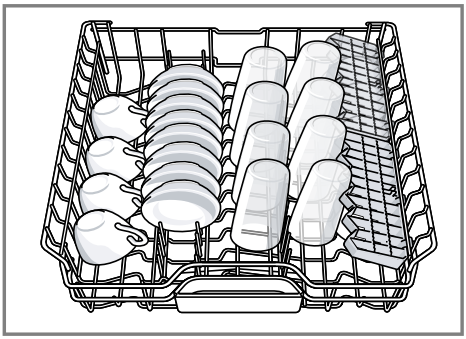

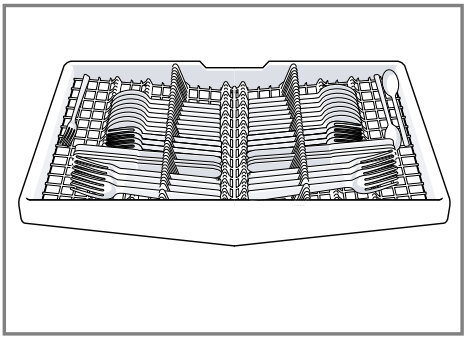

5.2 Favorite ☆

With this function, you can save a combination of a Cycle and an Option.
You can save the selected Cycle and Option combination via the Home Connect app.
The Auto cycle is pre-programmed to this button and is good for all types of dishware. This cycle is optimized by sensors which detect the soil level of the water.

Tip: You can use the Home Connect app to access additional Cycles and Options and save them.[1]

Save Favorite ☆ on the appliance

1. Open the appliance door.
2. Press ON/OFF.
3. Press a suitable cycle button.
4. Press the button for the relevant options.
5. Press Favorite button for 3 seconds.

✔ The selected cycle and option will flash.
✔ The Favorite button flashes.
✔ The program combination is saved.

Tip: To reset the cycle, either use the Home Connect app or reset your appliance back to the factory settings.

6 Options

Here is an overview of the different options available on your dishwasher.

Option	Use
extra dry Extra Dry	▪ For a better drying result, the final rinse temperature is increased and the drying phase extended. ▪ Especially suitable for drying plastic parts. ▪ There is a slight increase in energy consumption and the run time is extended.

[1] Depending on the appliance specifications

Option	Use
sanitize Sanitize	▪ Increases the temperature and cycle length to achieve sanitation. ▪ This option is ideal for cleaning items such as chopping boards and baby bottles. ▪ Using this option may also improve drying. There is a slight increase in energy consumption.

⚠ **WARNING**
Concerning dishware sanitation, be aware of the following.
- Only sanitizing cycles have been designed to meet the requirements for soil removal and sanitation efficacy. There is no intention, either directly or indirectly, to imply that all cycles on a certified machine have passed the sanitization performance test.

7 Features

You can find an overview of the possible features of your appliance and how to use them here.
These features depend on your appliance model.

7.1 Upper rack

Arrange cups, glasses, and small tableware items in the top rack.

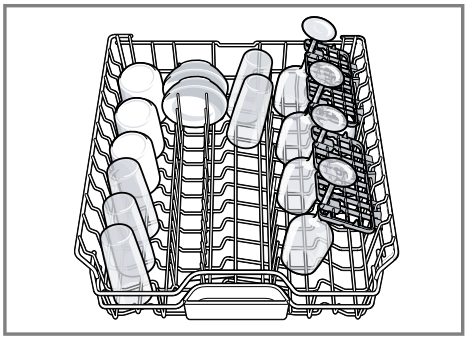

You can adjust the height of the upper rack to make room for larger items.

Adjusting upper rack with Rack-Matic®

To wash large items in the racks, adjust the shelf height of the upper rack.

1. Pull out the upper rack.
2. To prevent the rack from suddenly dropping down, hold the side of the rack by the top edge.
3. Press in the right and left hand levers on the outside of the rack.

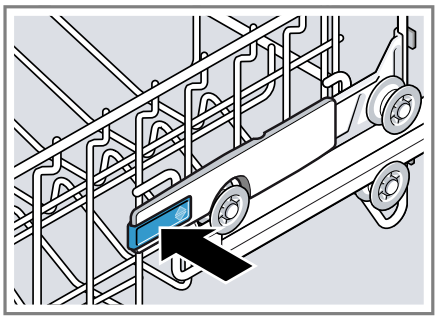

4. Raise or lower the rack evenly to the right level.

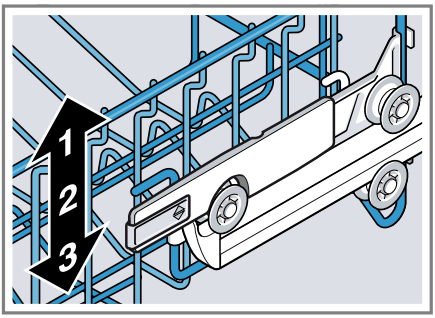

Check that the rack is level on both sides.

5. Release the levers.

✔ The rack clicks into position.

6. Slide the rack in.

7.2 Lower rack

Arrange pans and plates in the lower rack.

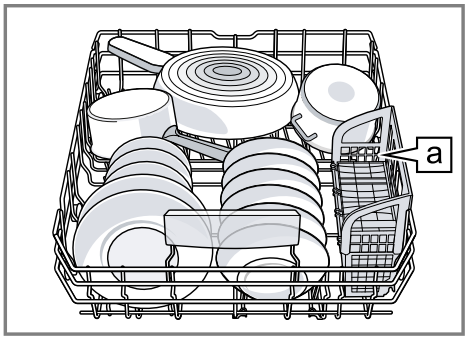

Silverware basket [a] [1]

7.3 Silverware Basket

Arrange the silverware in the silverware basket, ensuring that the items are not nestled together and with the sharp points down.

⚠ WARNING

The sharp points and edges of knives and other sharp utensils can cause serious injury.

- Load knives and other sharp utensils with edges down. Do not allow children to handle or play near knives and sharp utensils

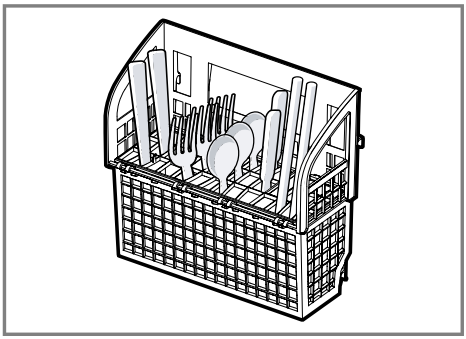

7.4 Silverware drawer

Arrange silverware in the silverware drawer.

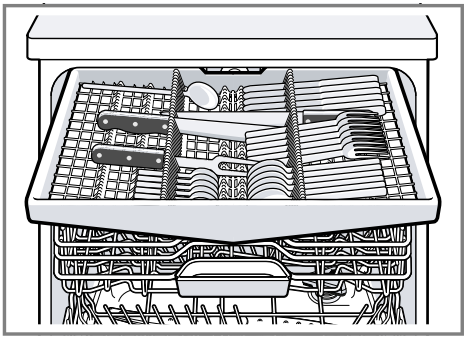

Arrange silverware with the points and sharp edges down.

7.5 Cup shelf

Use the cup shelf and the space underneath for small cups and glasses

[1] Depending on the appliance specifications

or for large items of silverware, e.g. cooking spoons or serving cutlery.

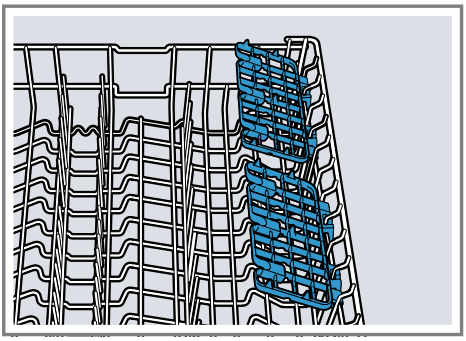

If you do not need the cup shelf, you can fold it down.

7.6 Flip tines

Use the flip tines to position dishware securely, e.g. plates.

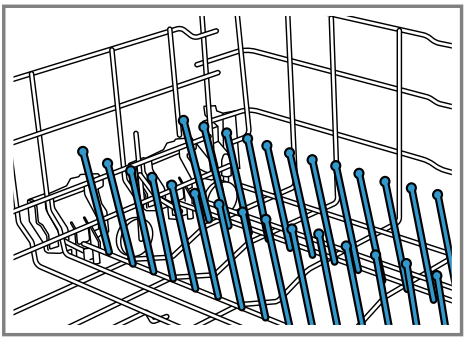

You can fold the tines down to arrange pans, bowls and glasses better. [1]

Folding down the tines [1]

If you do not need the tines, fold them down.

1. Push the lever forward ① and fold down the tines ②.

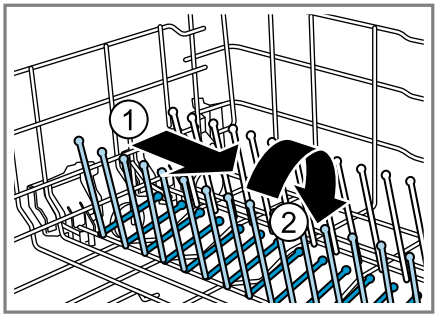

2. To use the tines again, fold them back up.

✔ The tines click into position.

7.7 Rack heights

Set the racks at the right height.

Appliance height 34" with silverware basket

Setting	Upper rack	Lower rack
1 max. ø	24 cm / 9.5"	33 cm / 13"
2 max. ø	26.5 cm / 10.5"	30.5 cm / 12"
3 max. ø	29 cm / 11.5"	28 cm / 11"

[1] Depending on the appliance specifications

Appliance height 34" with silverware drawer

Setting	Upper rack	Lower rack
1 max. ø	18 cm / 7"	33 cm / 13"
2 max. ø	20.5 cm / 8"	30.5 cm / 12"
3 max. ø	23 cm / 9"	28 cm / 11"

Tip: If you remove the 3rd rack, you can place large items of dishware in the lower rack.

8 Before using for the first time

8.1 Initial use

Before the first use, or after a factory reset, you will need to configure the settings.

Tip: Connect your appliance to a mobile device. You can conveniently change all settings using the Home Connect® app.
→ *"Home Connect® ", Page 29*

Requirement: The appliance has been installed and connected.

1. Add rinse aid. →*Page 18*
2. Switch on the appliance.
3. Set the amount of rinse aid. →*Page 19*
4. Add detergent.
5. Start the Program with the highest cleaning temperature without dishware. →*Page 25*
   To remove any marks from water or other residues, we recommend you operate the appliance without dishware before using it for the first time.

Tip: You can change these settings and other Basic settings →*Page 26* at any time.

9 Rinse aid system

9.1 Rinse aid

For optimum drying results, use rinse aid.
Only use rinse aid intended for household dishwashers.

Adding rinse aid

If the rinse aid refill indicator lights up, fill the dispenser with rinse aid. Only use rinse aid intended for household dishwashers.

1. Press the catch on the lid of the dispenser for rinse aid ① and lift ②.

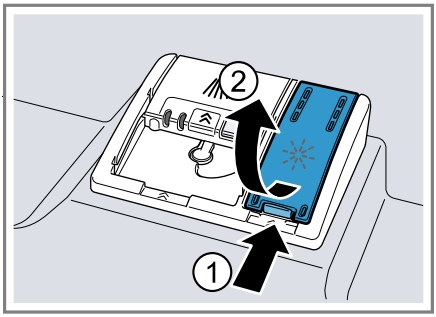

2. Add rinse aid up to the max mark.

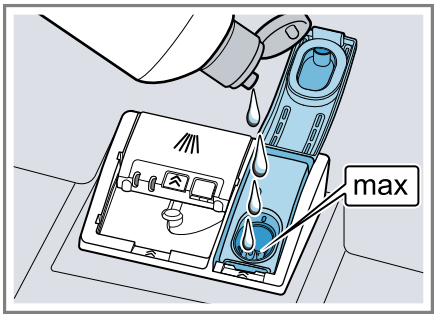

3. If rinse aid spills out, remove it from the tub.
   Spilled rinse aid can cause excessive frothing during the wash cycle.
4. Close the lid of the dispenser for rinse aid.
✔ The lid clicks into position.

9.2 Setting the amount of rinse aid

If there are streaks or water spots on dishware, change the amount of rinse aid.

1. Press ON/OFF.
2. To open the appliance settings, press A button for 3 seconds.

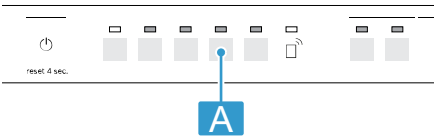

✔ The refill indicator for rinse aid flashes.
3. Press Start repeatedly until the right amount of rinse aid has been set.

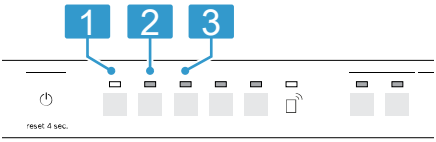

0, 1, 2 or 3 LEDs will light up accordingly.
The factory setting is level 2.
- A low setting adds less rinse aid during the wash cycle and reduces streaking on dishware.
- A higher setting adds more rinse aid during the wash cycle, reduces water spots and improves the drying result.

4. To store the setting, press A button for 3 seconds.

9.3 Switching off the amount of rinse aid to be dispensed

1. Press ON/OFF.
2. To open the appliance settings, press A button for 3 seconds.

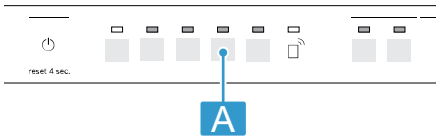

✔ The refill indicator for rinse aid flashes.
3. Press Start repeatedly until no LED lights up.
✔ The rinse aid system is switched off and the rinse aid refill indicator is deactivated.
4. To store the setting, press A button for 3 seconds.

10 Detergent

Find out which detergents are suitable for your appliance.

10.1 The correct detergents

Only use detergents that are made for dishwashers, either basic or combination detergents.
For the best washing and drying results, use a separate detergent, then add Rinse aid →*Page 18* separately.
Modern, powerful detergents mainly use a low-alkaline formulation with enzymes. Enzymes break down starch and remove protein. Oxygen-based bleaching agents are generally used to remove colored stains, e.g. tea or ketchup.

Note: Follow the manufacturer's instructions for each detergent.

Detergent	Description
Tabs	Tabs are perfect for all cleaning functions and do not need to be measured out. However, with shorter Cycles →*Page 12* sometimes tabs do not dissolve entirely and leave residues of detergent. This may reduce its effectiveness.
Powder detergent	Powder detergent is recommended for shorter cycles. The dosage can be adjusted to the level of soiling.
Liquid detergent	Liquid detergent works faster and is recommended for shorter cycles without a pre-rinse. Sometimes liquid detergent may leak out despite the detergent dispenser being closed. This is not a problem, just remember the following: ▪ Only choose a cycle without PreRinse. ▪ Do not use the Delay Start option. The dosage can be adjusted to the level of soiling.

10.2 Incompatible detergents

Do not use a detergent which is not designated for dishwasher use or contains chlorine.

Detergent	Description
Liquid hand soap	Liquid hand soap can cause increased frothing and damage the appliance.
Detergent containing chlorine	This may leave chlorine residue on dishware.

10.3 Information on Detergent

Follow the instructions on detergents in everyday use.

- Detergents marked as "ecological" (environmentally friendly) generally contain lower levels of active agents or none at all. The cleaning effect may be reduced.
- Adjust the rinse aid and the water softening system settings in accordance with the detergent or combination detergent in use.
- Any rinse aid component of a combination detergent has limited effectiveness. You will have better results using a separate rinse aid.
- To prevent sticking, only touch detergents in a water-soluble pouch with dry hands and only ever place them in a dry detergent dispenser.
- Even if the rinse aid and special salt refill indicators light up, the wash cycles will run properly with combination detergents.
- Use tablets with enhanced drying results.

10.4 Adding Detergent

1. To open the detergent dispenser, press the locking latch.

2. Add the detergent to the dry detergent dispenser.

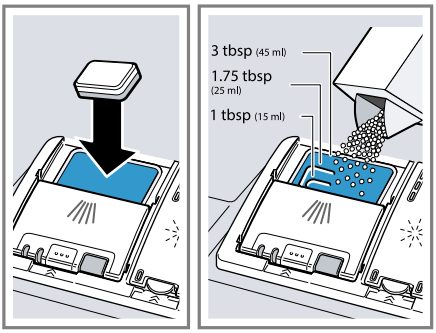

If you are using tablets, one is enough. Insert the tablets in a horizontal position.
If you are using powder or liquid detergent, follow the manufacturer's instructions and quantities for dosage in the detergent dispenser.
1.5 to 1.75 Tbsp (20 ml – 25 ml) detergent is sufficient for normal soiling. If dishware is only lightly soiled, slightly less than the amount of detergent specified is usually sufficient.

3. Close the lid of the detergent dispenser.

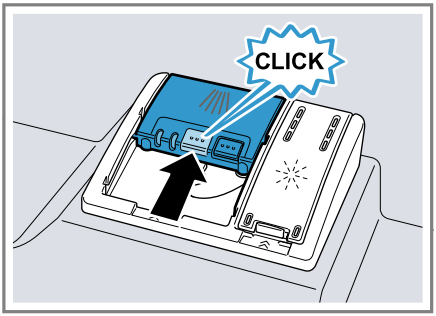

✔ The lid clicks into position.
✔ The detergent dispenser will open automatically at the optimum time during the cycle. Powder or liquid detergent will spread around the washing tank and dissolve there. Tablets will fall into the tablet collecting tray and dissolve in the right dosage. In order to ensure that tablets can dissolve evenly, do not place any other objects in the tablet collecting tray.

10.5 Detergent table

Detergent amount guidelines

Note: This dishwasher provides the optimum cleaning performance without the use of a prewash detergent and further enhances our standards of sustainability and efficiency.

Auto	1.75 Tbsp (25 ml) or 1 tab
Normal	1.75 Tbsp (25 ml) or 1 tab
Heavy	3 Tbsp (45 ml) or 1 tab
Speed 60®	1 Tbsp (15 ml)

11 Dishware

Only wash dishware that is suitable for dishwashers.

Note: Decorated glassware and parts made of aluminum or silver may fade or discolor with dishwashing. Delicate types of glass may turn cloudy after a few wash cycles.

11.1 Damage to glass and dishware

Only put glasses and china in the dishwasher if they are labeled dishwasher-safe. Avoid damage to glass and dishware.

Cause	Recommendation
The following types of dishes are not dishwasher-safe: ▪ Wooden utensils and dishes ▪ Decorative glassware, antique dishes and artistic hand-made pottery ▪ Plastic parts that are not heat-resistant ▪ Dishes made from copper or tin ▪ Dishes soiled with ash, wax, grease or paint ▪ Very small items of dishware	Only put dishes in the dishwasher if they are labeled dishwasher-safe.
The chemical composition of the detergent causes damage.	Use a detergent labeled as gentle to dishes.
Highly caustic alkaline or highly acidic cleaning solutions, in particular commercial or industrial cleaners, are not safe to use in the dishwasher with aluminum.	If you use highly caustic alkaline or highly acidic cleaning solutions, in particular commercial or industrial cleaners, do not put anything aluminum in the dishwasher.
The water temperature of the cycle is too high.	Select a cycle with lower temperatures. After the cycle has ended, take glassware and silverware out of the appliance without delay.
The water temperature of the cycle is too high and the water is too soft.	Select a cycle with lower temperatures. Use detergent with glass protection.

11.2 Loading dishware

Arrange dishware correctly to optimize the dishwashing result and prevent damage to both dishware and the appliance. The noise level may also vary depending on the items placed in your dishwasher.

⚠ WARNING

The sharp points and edges of knives and other sharp utensils can cause serious injury.

- ▸ Load knives and other sharp utensils with edges down. Do not allow children to handle or play near knives and sharp utensils

NOTICE

Avoid dishwasher damage

- ▸ Do not load the dishwasher with paper products, plastic bags, packing materials or anything other than normal, dishwasher safe dishware and kitchenware.

Tips

- Using the appliance allows you to save energy and water compared to doing dishes by hand.

- See our website for examples of how to load your appliance efficiently.
- To save energy and water, load the machine with the number of place settings specified (standard load with dishes and silverware).
- For better washing and drying results, position items with curves or recesses at an angle so water can run off.

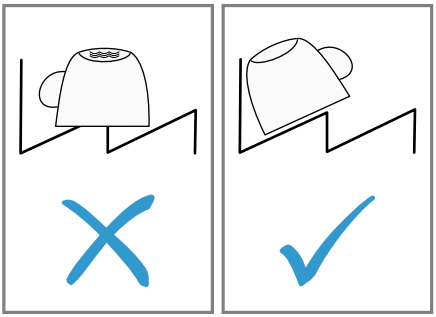

1. Remove large remnants of food from dishware.
   To save resources, do not pre-rinse dishware under running water.
2. Observe the following when arranging dishware:
   - Put heavily soiled dishware in the lower rack, e.g. pans. The more powerful spray jet ensures that the dishwashing result will be better.
   - To avoid damage to dishware, arrange it so it is stable and cannot tip over.
   - To avoid injury, arrange silverware with the points and sharp edges facing down.
   - Position containers with the openings facing down so no water can collect in them.
   - Do not block the spray arms - make sure that they can turn freely.
   - Do not place small parts in the collecting tray and do not block it with dishware so as not to obstruct the lid of the detergent dispenser.

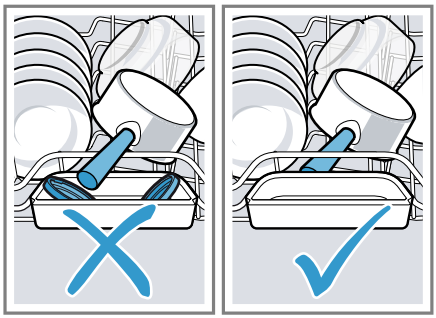

11.3 Removing dishware

⚠ CAUTION

Dishes can be very hot immediately after the cycle ends.

- Open the door slightly and allow dishes to cool for a few minutes before unloading.

1. To prevent water dripping onto dishware, unload it starting at the bottom and working up.
2. Check the washing tank and accessories for soiling and clean if necessary.
   → *"Cleaning and maintenance", Page 31*

11.4 Loading patterns

Recommended loading patterns.

12 place settings:
Lower rack

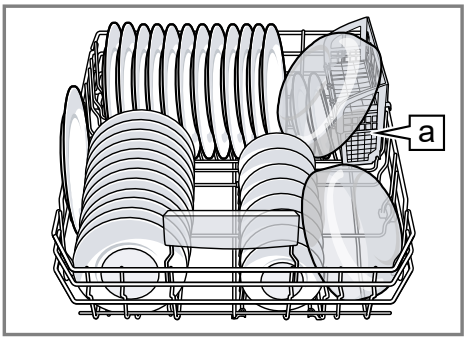

Silverware basket a [1]
Upper rack

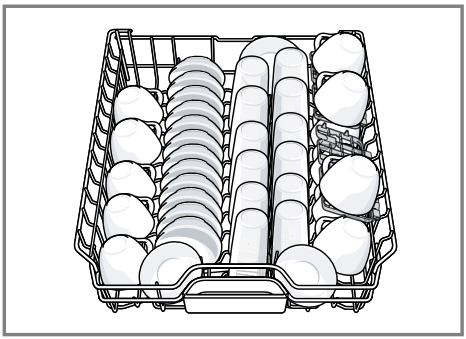

Third rack

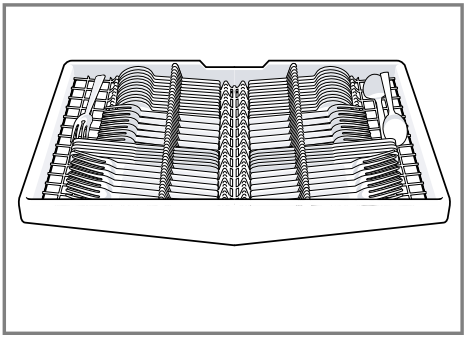

Additional loading patterns for 10 place settings:
Lower rack

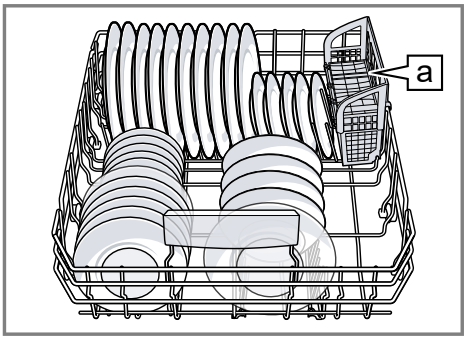

Silverware basket a [1]
Upper rack

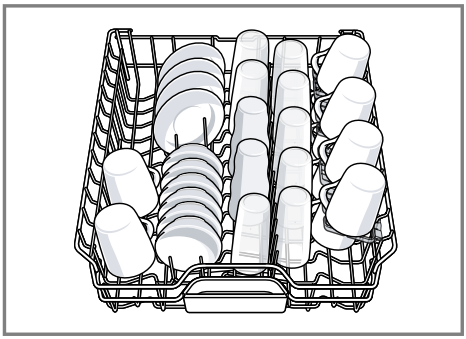

Third rack

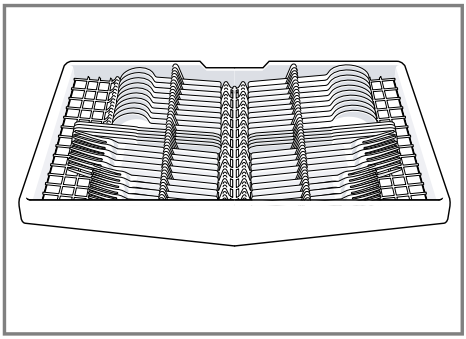

[1] Depending on the appliance specifications

12 Basic Operation

12.1 Protection against unintentional operation [1]

Your dishwasher has a built in feature to help prevent unintentional operation, e.g. by children. After starting the appliance, the door has to be closed within 4 seconds, otherwise the operation will be paused. If this occurs, follow the steps below to restart your dishwasher.

- Press Start and close the door.
- ✔ The wash cycle will resume.

Note
Unintentional operation is activated when:

- Pressing Start to begin a wash cycle
- Setting Delay time and pressing Start
- Opening the door while Delay time is active
- Opening the door during a wash cycle.
- This feature cannot be deactivated.

12.2 Switching on the appliance

- Touch ON/OFF with a short 1 second touch.
  The cycle last selected and the option last selected will be set by default.
  The buttons on the appliance are touch sensitive and only require a quick, gentle touch.

Note: If you do not perform any actions on the appliance for 10 minutes, it will automatically switch off. This feature cannot be deactivated.

12.3 Setting a cycle

To adjust the wash cycle to the soiling level of the dishware, select a suitable program.

- Press a suitable cycle button.
- ✔ The cycle is set and the cycle button flashes.

12.4 Setting options

You can set options to complete the chosen wash program.

Note: The available options depend on which program is selected.

- Press the button for the relevant option.
- ✔ The option is set and the option button flashes.

12.5 Setting the time delay

You can delay the start of the wash cycle via the Home Connect® app.

- Open the Home Connect® app and select the appliance.
  In the settings, you can use the time delay function to delay the start of the wash cycle.

12.6 Starting the wash cycle

- Press Start.
- ✔ The wash cycle has ended when no LEDs on the controls are lit.

Notes

- If you want to add more dishware while the appliance is running, do not use the collecting tray as a handle for the upper rack. You might touch the partially dissolved tablet.
- You can only change a cycle in progress if you can cancel it first.
  → *"Terminating the wash cycle", Page 26*

[1] Depending on the appliance specifications

- To save energy, the appliance switches off automatically 10 minutes after the end of the wash cycle. If you open the appliance door immediately after the wash cycle has ended, the appliance will switch off after 4 seconds.

12.7 Activating the button lock

The button lock prevents the appliance from being operated accidentally or incorrectly while running.

- ▸ Press ⊂⊃ for approx. 3 seconds.
- ✔ The button lock is activated and will be automatically deactivated at the end of the cycle.
- ✔ The button lock remains activated with a power failure.

12.8 Deactivating the button lock

- ▸ Press ⊂⊃ for approx. 3 seconds.

12.9 Interrupting the wash cycle

1. Press On/Off.
   The program is saved and the appliance switches off.
2. Press On/Off.
3. Press Start to resume the wash cycle. [1]

12.10 Terminating the wash cycle

To end a cycle early or to switch from one that has already started, you will need to cancel it first.

1. Open the appliance door.
2. Press Reset 4 sec. for approx. 4 seconds.
3. Close the appliance door.
- ✔ The wash cycle is terminated and the appliance is reset. All LEDs light up for approx. 1 minute.
- ✔ As soon as the LEDs are off, the residual water is pumped out.
- ✔ The cycle is cancelled and ends after approx. 1 minute.

12.11 Switching off the appliance

⚠ **CAUTION**

To avoid risk of injury, always use caution when opening the door during or following a wash cycle as hot water or steam may escape.

- ▸ Do not fully open the door until water noises have stopped and steam has subsided.

1. Please note the information on Preventing Material Damage → *Page 8*.
2. Press On/Off.

13 Basic settings

You can configure the basic settings for your appliance to meet your needs.

13.1 Overview of the basic settings

The basic settings depend on the features of your appliance.

[1] Depending on the appliance specifications

Basic setting	Selection	Description
Rinse aid disp.	Scale with 4 levels	Set or switch off the amount of rinse aid to be dispensed. → *"Setting the amount of rinse aid", Page 19*
Intensive drying	On Off [1]	Switch intensive drying on or off for each operation. The temperature in the final rinse is increased for a better drying result. This may increase the run time slightly. **Note:** Please take care with delicate dishware. → *"Setting intensive drying", Page 27*
Signal volume	Scale with 4 levels	Adjusting the signal volume. → *"Setting the signal volume", Page 28*
Wi-Fi	On Off [1]	Switch the wireless network connection on or off. → *"Setting Wi-Fi", Page 28* The basic setting is not available until you have connected the appliance with the Home Connect® app. → *"Home Connect® ", Page 29*
Factory setting	Reset	Restore changed settings to the factory settings. The settings for initial use must be configured.

Tip: Connect your appliance to a mobile device. You can conveniently change all settings using the Home Connect® app.
→ *"Home Connect® ", Page 29*

Setting intensive drying

1. Press ON/OFF.

[1] Factory setting (may vary according to model)

2. To open the appliance settings, press A button for 3 seconds.

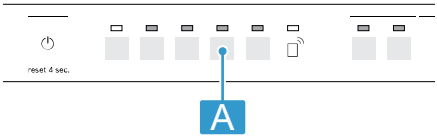

✔ The refill indicator for rinse aid flashes.

3. Press A button repeatedly until the Clean and Sanitize LEDs flash.
4. Press Start button repeatedly until the LED (1) lights up.

If the LED is not lit up, intensive drying is switched off.
If the LED is lit up, intensive drying is switched on.

5. To store the settings, press A button for 3 seconds.

Setting Wi-Fi

1. Press ON/OFF.
2. To open the appliance settings, press A button for 3 seconds.

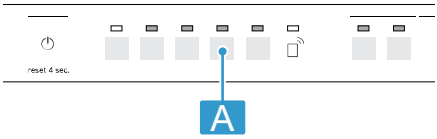

✔ The refill indicator for rinse aid flashes.

3. Press A button repeatedly until the Rinse Aid and Sanitize LEDs flash.
4. Press Start button repeatedly until the LED (1) lights up.

If the LED is not lit up, Wi-Fi is switched off.
If the LED is lit up, Wi-Fi is switched on.

5. To store the settings, press A button for 3 seconds.

Setting the signal volume

1. Press ON/OFF.
2. To open the appliance settings, press A button for 3 seconds.

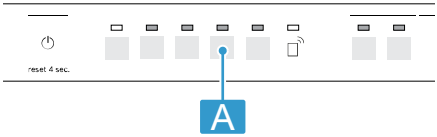

✔ The refill indicator for rinse aid flashes.

3. Press A button repeatedly until the Clean and Rinse Aid LEDs flash.
4. Press Start button repeatedly until the right signal volume has been set.

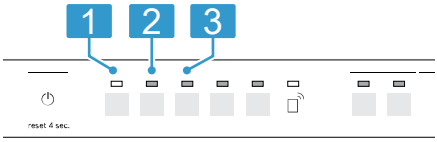

0, 1, 2 or 3 LEDs will light up accordingly. The selected signal tone will sound.
The factory setting is level 2.

5. To store the setting, press A button for 3 seconds.

Restoring factory settings

1. Press ON/OFF.
2. To open the appliance settings, press A button for 3 seconds.

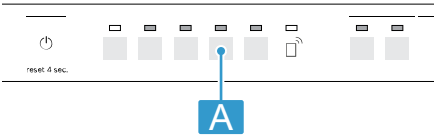

✔ The refill indicator for rinse aid flashes.

3. Press A button repeatedly until the Clean, Rinse Aid and Sanitize LEDs flash.
4. Press Start button.

✔ These LEDs flash. The appliance is reset to factory settings.

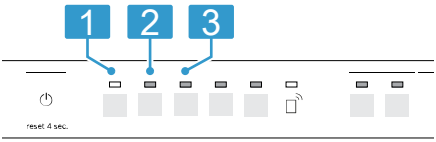

14 Home Connect®

This appliance is network-capable. Connecting your appliance to a mobile device lets you control its functions via the Home Connect® app. The Home Connect® services are not available in every country. The availability of the Home Connect® function depends on the availability of the Home Connect® services in your country. You can find information on this at: *www.home-connect.com*.

To be able to use Home Connect®, you must first set up the connection to the WLAN home network (Wi-Fi [1]) and to the Home Connect® app.

The Home Connect® app guides you through the entire registration process. Follow the instructions, noting the information in the Home Connect® app.

Note: Note the safety information in this instruction manual and ensure that it is also observed when operating the appliance using the Home Connect® app.

14.1 Setting up Home Connect®

Requirement: The appliance receives signals from the WLAN home network (Wi-Fi) at its installation location.

1. Scan the following QR code.

   You can install the Home Connect® app and connect your appliance via the QR code.
2. Follow the instructions in the Home Connect® app.

14.2 Home Connect® settings

Adapt Home Connect® to your needs.

You can find the Home Connect® settings in the basic settings for your appliance. Which settings the display shows will depend on whether Home Connect® has been set up

[1] Wi-Fi is a registered trade mark of the Wi-Fi Alliance.

and whether the appliance is connected to your home network.

14.3 Remote Start

You can use the Home Connect® app to start the appliance with your mobile device.

Note: You can change settings using the Home Connect® app.

Activating Remote Start

Requirements

- The appliance is connected to your WLAN home network.
- The appliance is connected to the Home Connect® app.
- A program is selected.

► Press .
If you open the appliance door, the function is automatically deactivated.

✔ button lights up.

Tip: To deactivate the function, press .

Note

The following settings are possible using the Home Connect® app:

- Deactivate the function permanently.
- Select the function using the button. This setting is the default preset at the factory.
- Activate the function permanently. With this setting pressing button is not necessary.

14.4 Smart Start [1]

Smart Start automatically determines the best time for the program to start. You can use the Home Connect® app to activate or deactivate the function.

Activating Smart Start

Requirements

- Smart Start is activated via the Home Connect® app.
- Preferences for time and energy are set in the Home Connect® app.

1. Press ON/OFF.

✔ The LED displays light up 3h, 6h or 9h depending on the optimal start time.

2. Press Start.

✔ Smart Start is active.

✔ The program starts as soon as the optimal time is reached.

Tip: Deactivate the function a single time by pressing Delay.

14.5 Remote Diagnostics

Customer Service can access your appliance via Remote Diagnostics if you ask them to do so, provided your appliance is connected to the Home Connect® server and Remote Diagnostics is available for your appliance and country. For more information on Remote Diagnostics' availability in your country, visit the Service/Support section of your local website: *www.home-connect.com*. Please be aware that while Remote Diagnostics can assist in troubleshooting select issues, there may be instances where an on-site service visit is required if the problem cannot be resolved remotely.

14.6 Data Protection

See the information on data protection.

The first time your appliance is registered on a home network connected to the Internet, your appliance trans-

[1] Depending on the appliance specifications

mits the following types of data to the Home Connect® server (initial registration):

- Unique appliance identification (consisting of appliance codes as well as the MAC address of the installed Wi-Fi communication module).
- Security certificate of the Wi-Fi communication module (to ensure a secure data connection).
- The current software and hardware version of your home appliance.
- Status of any previous reset to factory settings.

This initial registration prepares the Home Connect® functions for use and is only required when you want to use the Home Connect® functions for the first time.

Note: Please note that the Home Connect® functions can only be used in conjunction with the Home Connect® app. Information on data protection can be retrieved in the Home Connect® app.

15 Cleaning and maintenance

To keep your appliance working efficiently for a long time, it is important to clean and maintain it carefully.

Note: The Statement of Limited Product Warranty covers defects in materials and workmanship. Cleaning and maintenance is not covered by the warranty and a charge will apply. See the Statement of Limited Product Warranty for more details.

15.1 Cleaning the tub

1. Add detergent for dishwashers to the detergent dispenser.
2. Select the program with the highest temperature.
3. Start the program without dishware. → *Page 25*

15.2 Cleaning agent

Only use suitable cleaning agents to clean your appliance.
→ *"Preventing material damage", Page 8*

15.3 Tips on appliance care

Follow the tips on appliance care to make sure your appliance functions properly at all times.

Action	Benefit
Regularly wipe the door seals, the front of the dishwasher and the control panel using a damp cloth and dishwashing liquid.	This ensures the parts of the appliance will remain clean and hygienic.
If the appliance is not going to be used for a while, leave the door slightly ajar.	This will prevent unpleasant odors.

15.4 Filter system

The filter system removes coarse soiling from the dishwashing cycle.

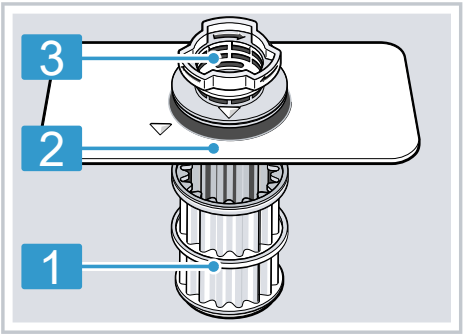

1	Micro filter
2	Fine filter
3	Coarse filter

Cleaning filters

Debris in the rinsing water can block the filters.

1. Check the filters for residue after each wash.
2. Turn the coarse filter counterclockwise ① and remove the filter system ②.
   - Ensure that foreign objects do not fall into the sump.

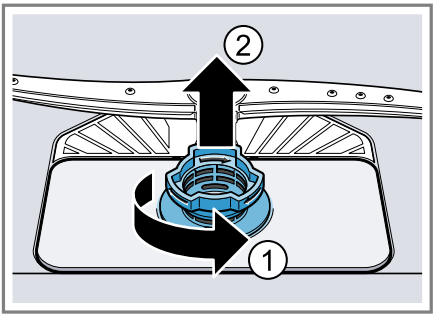

3. Pull down the micro filter to remove.

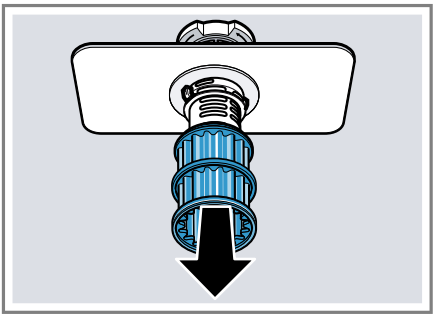

4. Press the locking catches together ①and lift the coarse filter out ②.

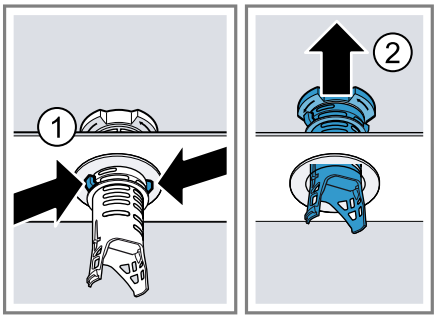

5. Clean the filter elements under running water.
   Carefully remove the rim of debris between the coarse filter and the fine filter.
6. Put the filter system back together. Ensure that the locking catches on the coarse filter click into position.
7. Insert the filter system into the appliance and turn the coarse filter clockwise.
   - Ensure that the arrow markings match up.

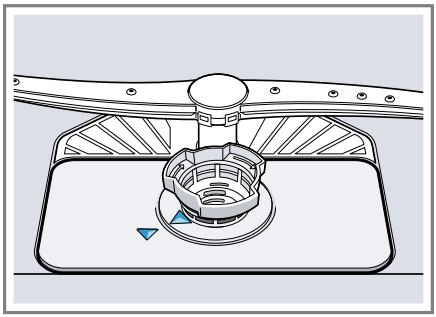

Tip: Connect your appliance to a mobile device. The Home Connect® app will tell you as soon as you need to clean the filters.
→ *"Home Connect® ", Page 29*

15.5 Cleaning the spray arms

Limescale and soiling in the dishwashing water may block the nozzles

and bearings on the spray arms. Clean the spray arms regularly.

1. Unscrew the upper spray arm ① and pull down to remove ②.

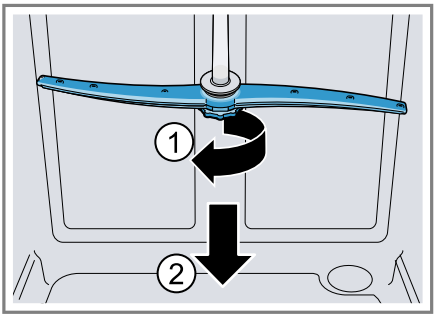

2. Pull up the lower spray arm to remove.

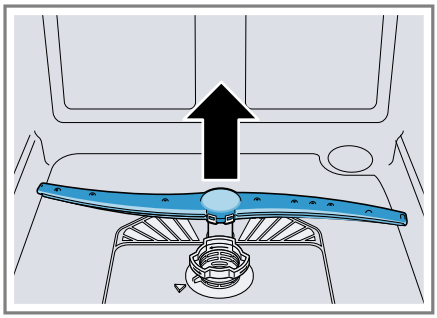

3. Check the outlet nozzles on the spray arms for blockages under running water and remove any foreign objects.
4. Insert the lower spray arm.
✔ The spray arm clicks into position.
5. Insert the upper spray arm and screw firmly in place.

16 Troubleshooting

You can eliminate minor issues on your appliance yourself. Please read the information on eliminating issues before contacting Customer Service. This may avoid unnecessary repair costs.

Fault	Cause and troubleshooting
Four vertical LED's (i.e. the cycle duration indicators and the clean indicator) all light up at the same time.	Not an appliance error. Garbage disposal is still plugged or the drain hose is kinked. ▸ Check that the garbage disposal plug is removed and that the drain hose is not kinked.
	Not an appliance error. The drain pump cover is loose or a foreign object is blocking the pump. ▸ Secure the cover of the drain pump so it clicks into place or clean the drain pump.

Fault	Cause and troubleshooting
Four vertical LED's (i.e. the cycle duration indicators and the clean indicator) all light up at the same time.	Inlet hose is kinked. ▸ Install the supply hose without kinks.
	Water supply valve is closed. **1.** Open the water supply valve. **2.** Terminate the wash cycle. → *"Terminating the wash cycle", Page 26* **3.** Start a wash cycle. **4.** If the problem occurs again: ▸ Contact the customer service. → *"Customer Service", Page 44* → *"Customer Service", Page 44*
	Water supply valve is jammed or clogged up. **1.** Open the water supply valve. The flow rate must be at least 10 l/min when the water supply is open. **2.** If the problem occurs again: ▸ Contact customer service. → *"Customer Service", Page 44* → *"Customer Service", Page 44*
	Power voltage is too low. There is no problem with the appliance. **1.** Call an electrician. **2.** Have the power voltage and electrical installation checked by an electrician.
Four vertical LED's (i.e. the cycle duration indicators and the clean indicator) are all flashing.	There is a technical issue. **1.** Press ON/OFF. **2.** Pull out the power cord plug of the appliance or switch off the breaker. **3.** Wait at least 2 minutes. **4.** Insert the power cord plug of the appliance in a power outlet or switch on the breaker. **5.** Switch on the appliance. **6.** If the problem occurs again: ▸ Press ON/OFF. ▸ Close the water supply valve. ▸ Pull out the power cord plug. ▸ Contact customer service →*Page 44* and give the error code.
Dishware is not dry.	No rinse aid used or dosage set too low. **1.** Add Rinse aid →*Page 18*. **2.** Set the amount of rinse aid to be dispensed. → *"Setting the amount of rinse aid", Page 19*

Fault	Cause and troubleshooting
Dishware is not dry.	Cycle or cycle option has no drying phase, or drying phase is too short. ▸ Select a wash cycle with drying. →*Page 12* Some option buttons decrease the drying result.
	Water collects in recesses of dishware or silverware. ▸ Position dishware at an angle where possible. 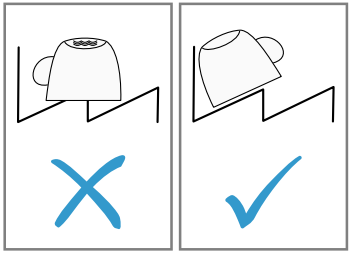
	The combined detergent used has a poor drying performance. **1.** Use rinse aid to improve drying performance. **2.** Use a different combined detergent with a better drying performance.
	Extra Dry/intensive drying not activated to improve drying performance. ▸ Activate Extra Dry/intensive drying.
	Dishware removed too early or drying process not yet ended. **1.** Wait until the program ends. **2.** Only remove dishware 30 minutes after the program has ended.
	Rinse aid used has a limited drying performance. ▸ Use a name-brand rinse aid. Eco products may have limited effectiveness.
Silverware is not dry.	Silverware not arranged properly in the silverware basket or silverware drawer. Droplets can form on the contact points of silverware. **1.** Arrange silverware individually where possible. →*Page 22* **2.** Avoid points of contact.
Appliance interior still wet after wash cycle.	Not an error. Condensation drying creates water droplets in the tub. This is normal. Moisture in the air condenses on the inside walls of the appliance, runs off, and is pumped out. No action required.

Fault	Cause and troubleshooting
Food remnants on dishware.	Dishware was placed too close together or rack is overfilled. **1.** Arrange dishware with sufficient space in between. The spray jets must reach the surfaces of the dishware. **2.** Avoid points of contact.
	Spray arm rotation is blocked. ▸ Arrange dishware so it does not obstruct spray arm rotation.
	Spray arm nozzles are blocked. ▸ Clean the spray arms. → *"Cleaning the spray arms", Page 32*
	Filters are dirty. ▸ Clean the filters. → *"Cleaning filters", Page 32*
	Filters are inserted incorrectly and/or not engaged. **1.** Insert the filters properly. → *"Filter system", Page 31* **2.** Twist filters into place.
	Selected wash cycle is too light. ▸ Select a more intensive wash program.
	Dishware has been precleaned too intensively. Then the sensors choose a lighter cycle. Stubborn remnants cannot be entirely removed. ▸ Only remove large remnants of food and do not pre-rinse dishware.
	Tall narrow containers in corner areas are not rinsed out adequately. ▸ Do not position tall narrow containers at too great an angle or in corner areas.
	Upper rack on right and left not set to same height. ▸ Set the upper rack on the left and right to the same height. → *"Upper rack", Page 15*
Detergent residue in the appliance	Lid of the detergent dispenser is blocked by items of dishware and will not open. **1.** Arrange dishware in the upper rack so the tab collecting tray is not obstructed by dishware. → *"Loading dishware", Page 22* Items of dishware are blocking the dispenser lid. **2.** Do not place dishware or fragrance dispensers in the tab collecting tray.

Fault	Cause and troubleshooting
Detergent residue in the appliance	The lid of the detergent dispenser is blocked by the tab and will not open. ▸ Position the tab in the detergent dispenser crosswise, not vertically.
	Tabs are used in the quick or short cycle. There is not enough time for the tab to dissolve. ▸ Select a more intensive Wash cycle or use Powder detergent.
	Detergent may lose its cleaning or dissolving ability after being stored a long time, or the detergent is clumped together. ▸ Change your Detergent.
Water spots on plastic parts.	Droplet formation on plastic surfaces is unavoidable due to the laws of physics. Water spots are visible after drying. ▸ Select a more intensive program. ▸ Position dishware at an angle. → *"Loading dishware", Page 22* ▸ Use rinse aid. → *"Rinse aid", Page 18*
Wipeable or water-soluble coatings inside the appliance or on the door.	There is detergent residue. These coatings cannot generally be removed with chemicals. ▸ Change your Detergent. ▸ Scrub the appliance by hand.
There are stubborn white coatings on the dishware, inside the appliance or on the door.	There is detergent residue. These coatings cannot generally be removed with chemicals. ▸ Change your Detergent. ▸ Scrub the appliance by hand.
	Too little detergent is being used. ▸ Increase the amount of detergent used or change Detergent .
	Selected wash cycle is too light. ▸ Select a more intensive wash program.
Tea residue or lipstick marks on dishware.	Dishwashing temperature is too low. ▸ Select a program with a higher dishwashing temperature.
	Too little detergent is being used or is unsuitable. ▸ Use a suitable Detergent and follow the manufacturer's instructions for the amount to be used.

Fault	Cause and troubleshooting
Tea residue or lipstick marks on dishware.	Dishware has been precleaned too intensively. Then the sensors choose a lighter cycle. Stubborn remnants cannot be entirely removed. ▸ Only remove large remnants of food and do not pre-rinse dishware.
There are colored coatings (blue, yellow, brown) inside the appliance or on stainless steel dishware that are difficult or impossible to remove.	The formation of films is due to substances contained in vegetables (cabbage, celery, potatoes, noodles, etc.) or tap water (manganese). ▸ Clean the appliance. You can remove coatings with Mechanical cleaning or a machine cleaning product. It may not always be possible to completely remove coatings but they are harmless to health.
	The formation of films is due to metal components on silver or aluminum dishware. ▸ Clean the appliance. You can remove coatings with Mechanical cleaning or a machine cleaning product. It may not always be possible to completely remove coatings but they are harmless to health.
Plastic parts inside the appliance are discolored.	Plastic parts inside the appliance may become discolored over the life of the dishwasher. ▸ Discoloration may come about and will not impair functioning of the appliance.
Plastic parts are discolored.	Dishwashing temperature is too low. ▸ Select a program with a higher dishwashing temperature.
	Dishware has been precleaned too intensively. Then the sensors choose a lighter cycle. Stubborn remnants cannot be entirely removed. ▸ Only remove large remnants of food and do not pre-rinse dishware.
There are removable streaks on glasses, glassware with a metallic appearance and silverware.	Amount of rinse aid to be dispensed is set too high. ▸ Set the rinse aid system to a lower setting. → *"Setting the amount of rinse aid", Page 19*
	No rinse aid has been added. ▸ Add rinse aid. → *"Adding rinse aid", Page 18*

Fault	Cause and troubleshooting
There are removable streaks on glasses, glassware with a metallic appearance and silverware.	There is detergent residue in the final rinse. Lid of detergent dispenser is blocked by dishware and will not open fully. **1.** Arrange dishware in the upper rack so the tab collecting tray is not obstructed by dishware. → *"Loading dishware", Page 22* Items of dishware are blocking the dispenser lid. **2.** Do not place dishware or fragrance dispensers in the tab collecting tray.
	Dishware has been precleaned too intensively. Then the sensors choose a lighter cycle. Stubborn remnants cannot be entirely removed. ▸ Only remove large remnants of food and do not pre-rinse dishware.
Irreversible clouding of glassware.	Glasses are not dishwasher-proof, only suitable for dishwashers. ▸ Use dishwasher-proof glasses. Glasses are usually only suitable for cleaning in a dishwasher, i.e. long-term wear or long-term changes must be expected. ▸ Avoid a lengthy steam phase (standing time after wash cycle ends). ▸ Use a program with a lower temperature. ▸ Use detergent with a glass protection component.
Detergent residue is present in the detergent dispenser or the tab collecting tray.	Spray arms were blocked by dishware so detergent was not rinsed out. ▸ Check that the spray arms are not blocked and can rotate freely.
	Detergent dispenser was damp when detergent was added. ▸ Only add detergent to the detergent dispenser when dry.
Excessive formation of foam occurs.	Hand soap got in the rinse aid dispenser. ▸ Immediately add rinse aid to the dispenser. → *"Adding rinse aid", Page 18*
	Rinse aid has been spilled. ▸ Remove the rinse aid with a cloth.
	Detergent or machine care product used causes excessive foaming. ▸ Change the brand of detergent.

Fault	Cause and troubleshooting
Connection to home network is not established.	WLAN on router is not active. ▸ Check the wireless network connection of your router.
WLAN display is flashing.	Connection to home network is not available. ▸ Activate the wireless network connection on your router.
Home Connect cannot be implemented correctly.	Home Connect set incorrectly. ▸ Please consult the documents supplied for Home Connect®.
	There is a technical error. ▸ Please consult the information on support in the documents supplied for Home Connect®.
Refill indicator for rinse aid lights up.	No rinse aid. **1.** Add Rinse aid →*Page 18*. **2.** Set the amount of rinse aid to be dispensed. → *"Setting the amount of rinse aid", Page 19*
Refill indicator for rinse aid does not light up.	Rinse aid system is switched off. ▸ Set the amount of rinse aid. → *"Setting the amount of rinse aid", Page 19*
All LEDs light up or flash.	A software update is possibly installing. **1.** Wait until the software update has been installed. This process can take approx. 30 minutes. **2.** If the appliance is not ready to use after 30 minutes, perform a reset. ▸ Press the main switch button for approx. 4 seconds. ✔ Your appliance is resetting.
	Electronics have detected a fault. **1.** Press the main switch button for approx. 4 seconds. → *"Controls", Page 11* The appliance is reset and restarted. **2.** If the problem occurs again: ▸ Switch off the appliance. ▸ Unplug the power plug or switch off the circuit breaker in the fuse box. ▸ Wait at least 2 minutes. ▸ Switch on the circuit breaker in the fuse box or plug in the power plug. ▸ Switch on the appliance. **3.** If the problem occurs again: ▸ Contact customer service. → *"Customer Service", Page 44* → *"Customer Service", Page 44*

Fault	Cause and troubleshooting
Water is left in the appliance at the end of the program.	Filter system or area under the filters is blocked. **1.** Clean the Filters →*Page 32*. **2.** Clean the Drain pump →*Page 42*.
	Program has not yet ended. ▸ Wait until the program ends or terminate the program with **Reset**. ▸ → *"Terminating the wash cycle", Page 26*
Appliance cannot be switched on or operated.	Software update is taking place. ▸ Wait until the software update has finished.
	Appliance functions have failed. **1.** Pull out the power cord plug or switch off the breaker. **2.** Wait at least 2 minutes. **3.** Connect the appliance to the power supply. **4.** Switch the appliance on.
Appliance does not start.	The breaker has tripped. ▸ Check the relevant breaker.
	Power cord is not inserted. **1.** Check whether the power outlet is working. **2.** Check whether the power cord plug is properly inserted in the power outlet and on the rear of the appliance.
	Appliance door is not closed properly. ▸ Close the appliance door.
Wash cycle starts up automatically.	You did not wait until the cycle ended. ▸ → *"Terminating the wash cycle", Page 26*
Appliance stops during the cycle or cuts out.	Appliance door is not closed properly. ▸ Close the appliance door.
	Power and/or water supply has been interrupted. **1.** Check the power supply. **2.** Check the water supply.
	Upper rack is pressing against inner door and preventing appliance door from being closed securely. ▸ Check whether the rear panel of the appliance is being pressed in by a power outlet or a hose holder that has not been removed. ▸ Arrange the dishware so that no parts project beyond the rack and prevent the appliance door from closing properly.
Appliance door cannot be closed.	Door lock has been activated. **1.** Close the appliance door with greater force.

Fault	Cause and troubleshooting
Appliance door cannot be closed.	**2.** If the installation conditions prevent quick realignment of the closing system, you can move the door lock back to the home position using a spoon. See the animation for how to move the door lock to the home position.
	Door cannot be closed due to installation method. ▸ Check whether the appliance has been installed properly. When closed, the appliance door, its decor or attached parts should not knock against adjacent cabinets or the worktop.
Lid on the detergent dispenser cannot be closed.	Detergent dispenser or lid are blocked by sticky detergent residue. ▸ Remove detergent residue.
Filling valves making knocking noises.	Caused by the domestic installation. No fault present in the appliance. Does not affect functioning of the appliance. ▸ Can only be remedied in the home installation.
Noise level varies	The noise level can vary, depending on what kind of dishes are loaded and where they are placed. ▸ Make sure the dishware is loaded in the most secure way, resting on the tines and not hitting each other. → *"Loading dishware", Page 22*
	Spray arm is striking dishes. ▸ Arrange dishware so the spray arms do not strike dishware.
	With a small load the water jets directly strike against the tub. ▸ Distribute the dishware evenly. ▸ Load the appliance with more dishware.
	Light items of dishware move about during the wash cycle. ▸ Position light items of dishware securely.

16.1 Clean drain pump

Large food remnants or foreign objects can block the drain pump. As soon as the dishwashing water no longer drains properly, the drain pump must be cleaned.

⚠ CAUTION
There may be some sharp debris, such as glass fragments, blocking the drain pump.
- Use caution when removing parts for cleaning.

1. Disconnect the appliance from the power supply.
2. Remove the upper and lower rack.
3. Remove the filter system.
4. Scoop out any water.
   Use a sponge if necessary.
5. Pry the pump cover off using a spoon and grip it by the cross-piece.

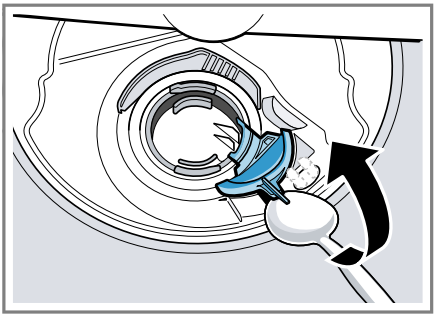

6. Lift the pump cover diagonally inward and take it out.
✔ Now you can reach the impeller with your hand.
7. Remove any food remnants or foreign objects in the area of the impeller.
8. Insert the pump cover ① and press down ②.

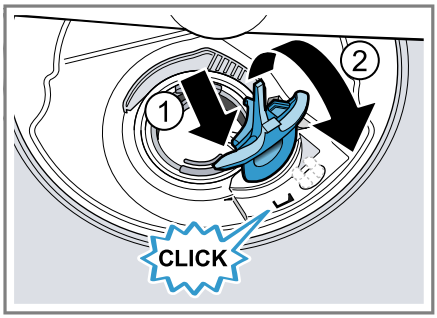

✔ The pump cover clicks into position.
9. Install the filter system.
10. Insert the upper and lower rack.
11. Connect the appliance to the power supply.

17 Transportation, storage and disposal

17.1 Removing the appliance

1. Disconnect the appliance from the power supply.
2. Close the water supply valve.
3. Detach the drain connection.
4. Detach the water connection.
5. Loosen any screws fastening the appliance to cabinet parts.
6. Remove the base panel if fitted.
7. Pull the appliance out carefully, along with the hose behind it.

17.2 Vacation and Storage

NOTICE
Preparing your appliance for vacation
- Before leaving for vacation during warmer weather, besides turning off the main valve, also turn off water supply at the nearest point to the dishwasher. During colder weather, please follow the instruc-

tions for winterizing your appliance below.

Winterizing your appliance

- If your dishwasher will be unused for an extended period of time in a location that experiences freezing temperatures (vacation home or through a vacation period), have your dishwasher winterized by a professional service.

17.3 Transporting the appliance

To avoid damage to the appliance, empty it before transporting.

Note: Always transport the appliance upright to prevent residual water getting into the machine's controls and damaging the appliance.

1. Remove dishware from the appliance.
2. Secure loose parts.
3. Open the water supply valve.
4. Switch on the appliance.
5. Select the cycle with the highest temperature.
6. Start the cycle. →*Page 25*
7. To drain the appliance, terminate the cycle after approx. 4 minutes. → *"Terminating the wash cycle", Page 26*
8. Switch off the appliance.
9. Close the water supply valve.
10. To empty the residual water out of the appliance, detach the supply hose and let the water drain out.

17.4 Disposal of your old appliance

Environmentally sound disposal allows valuable raw materials to be recycled.

⚠ WARNING

Avoid a risk of entrapment upon disposal.

- Unplug the appliance from the power outlet.
- Cut the power cord and remove the door upon discarding the appliance.
- Check your local area for large appliance recycling programs.

18 Customer Service

With any warranty repair, we will make sure your appliance is repaired by an authorized service provider using genuine replacement parts. We use only genuine replacement parts for all repairs.

You can obtain function-relevant and storable genuine spare parts from our Customer Service for up to 15 years from the date on which your appliance was placed on the market. For more information, please contact our Customer Service team.

Detailed information on the warranty period and terms of warranty can be found in the Statement of Limited Product Warranty, from your retailer, or on our website.

USA:
1-800-944-2904
www.bosch-home.com/us/owner-support/get-support
www.bosch-home.com/us/shop

CA:
1-800-944-2904
www.bosch-home.ca/en/service/get-support
www.bosch-home.ca/en/service/cleaners-and-accessories

For assistance with connecting to Home Connect®, you can also view instructions here:

www.home-connect.com/us/en/help-support/set-up

18.1 Model number (E-Nr.), production number (FD) and consecutive numbering (Z-Nr.)

If you contact Customer Service, you will need the product number (E-Nr.), production number (FD), and consecutive numbering (Z-Nr.), which you can find on the appliance's rating label.
The rating plate is located inside the appliance door.
→ *"Familiarizing yourself with your appliance", Page 9*
Making a note of your appliance's details and the Customer Service telephone number will enable you to find them again quickly.

19 Technical specifications

Weight	Max.: 60 kg/132 lbs
Voltage	120 V, 60 Hz
Power rating	1440 W
Fuse	12 A
Water pressure	▪ Min. 7.25 psi (50 kPa) ▪ Max. 145 psi (1000 kPa)
Inlet rate	Min. 2.6 gal/min
Water temperature	Cold water. Hot water max.: 140 °F/ (60 °C)
Load capacity	16 place settings

19.1 Information regarding Free and Open Source Software

This product includes software components that are licensed by the copyright holders as free or open source software.
The applicable license information is stored on your home appliance. You can also access the applicable license information via your Home Connect® app: "Profile -> Legal information -> License Information".[1] You can also download the license information on the brand product website. (Please search on the product website for your appliance model and additional documents). Alternatively, you can request the relevant information from ossrequest@bshg.com or BSH Hausgeräte GmbH, Carl-Wery-Str. 34, 81739 Munich, Germany.
The relevant source code will be made available to you on request. Please send your request to ossrequest@bshg.com or BSH Hausgeräte GmbH, Carl-Wery-Str.34, 81739 Munich, Germany.
Subject: „OSSREQUEST“
The cost of performing your request will be charged to you. This offer is

[1] Depending on the appliance specifications

valid for three years from the date of purchase or at least as long as we offer support and spare parts for the relevant appliance.

Recursos y ayuda en línea en español

Muchos manuales están disponibles en línea en inglés, francés y español. Para acceder a manuales de modelos específicos y otros documentos en español:

- Visite *www.bosch-home.com/us/owner-support/owner-manuals* o escanee el código QR.
- Introduzca el número de producto (E-Nr.) que encontrará en la placa de características del aparato.
- Seleccione o descargue el manual o documento que desee.

Bosch Home Connect App

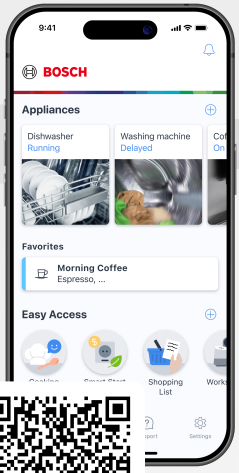

Connect your home appliance today and enjoy the following benefits:

- **Targeted appliance care: Use tips for care, updates and status checks via the app to ensure a long service life for your appliance.**
- **Optimal appliance performance: Maximize washing and drying results with settings tips and extra programs in the app.**
- **Smart operation: Start and control your appliance from anywhere. Automatic Smart Start options, perfectly tailored to your needs.**

Looking for help? You'll find it here.

No matter what, no matter when: Bosch is here to support you.
We're here to assist with usage instructions, cleaning tips, accessories & parts, troubleshooting, and repairs.
Find online resources such as FAQs, how-to-videos, manuals, warranties and authorized Bosch servicers at:
www.bosch-home.com/us/owner-support/get-support

Contact us:
Please have your model Number (E-Nr) ready when contacting us.
1-800-944-2904
www.bosch-home.com/us/owner-support/contact-us

BSH Home Appliances Corporation
1901 Main Street, Suite 600
Irvine, CA 92614
USA
www.bosch-home.com
1-800-944-2904
© 2026 BSH Home Appliances Corporation

9001641443 (060730) 650 E5
en-us

9001641443