

Operating and
installation instructions

Household Appliances

BOSCH

Fig. 1

GAZ

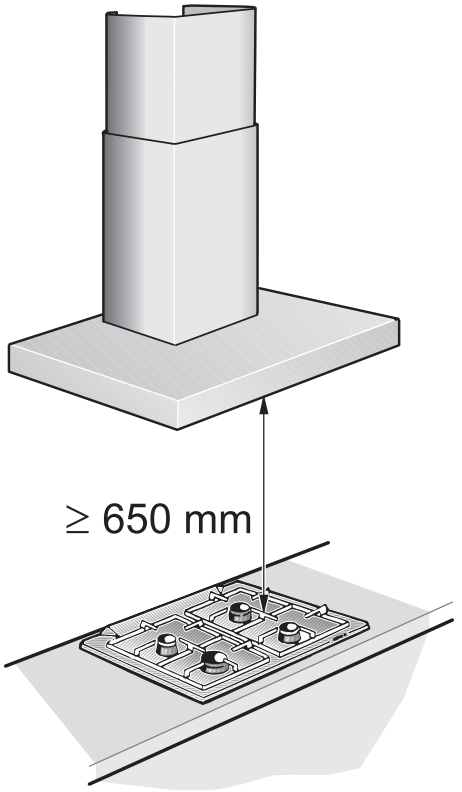

ELECTRO

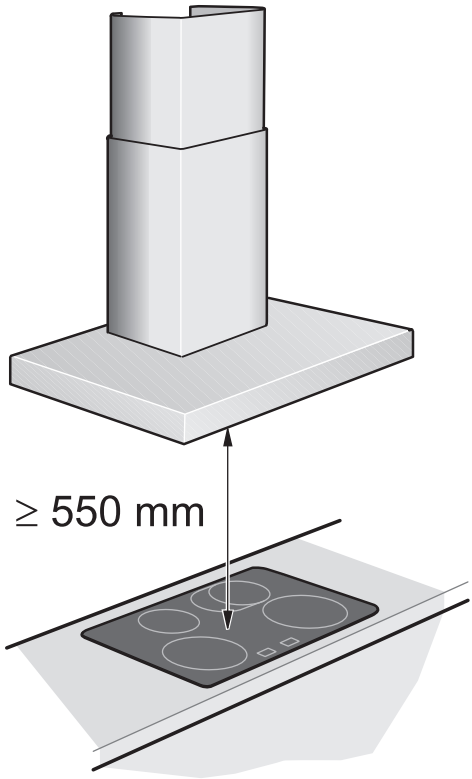

Table of contents

General Information **4**

Information on protection of the environment 4

Before using the appliance for the first time 4

Safety Instructions **5**

Intended use 5

Technical safety 5

Special information for gas cookers 6

Proper use 7

Correct installation 7

Operating modes **8**

Exhaust-air mode 8

Circulating-air mode 8

Operation **9**

Cleaning and Care **10**

Removing and installing the grease filters **11**

Removing and installing the metal-mesh grease filters 11

Installing and removing the activated carbon filters 11

Changing the bulbs **12**

Installation instructions **13**

Connecting Pipes 13

Electrical Connections 14

Installation **15**

Installation preparations 15

Attachment 16

Installing the flue ducts 17

Information on protection of the environment

Disposal of transport packaging

Your new appliance was sent to you in protective packaging. All utilised materials are environmentally safe and recyclable. Please help us by disposing of the packaging in an environmentally friendly manner.

Packaging parts can be hazardous for children. Therefore keep them outside the reach of children.

Disposal of the old appliance

Old appliances are not worthless rubbish. Valuable raw materials can be reclaimed by recycling old appliances.

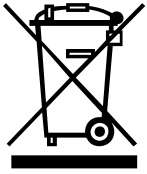

This appliance is identified according to the European Directive 2002/96/EC on waste electrical and electronic equipment – WEEE). The directive specifies the framework for an EU-wide valid return and re-use of old appliances.

Before disposing of your old appliance, render it unusable.

Never treat your old appliance as non-recyclable waste!

Please ask your dealer or inquire at your local authority about current means of disposal.

Ensure that the old appliance is kept childproof until it is disposed of.

Before using the appliance for the first time

NOTE: These operating instructions apply to several appliance models It is possible that individual features are described which do not apply to your appliance.

Before switching on your new appliance, please read the operating instructions carefully. They contain important information on safety and how to use and look after the appliance.

Keep the operating and instructions in a safe place and pass them on to any subsequent owner of the appliance.

Faults

Please contact customer service regarding any queries or faults.

(See list of customer service centres).

When calling, please quote:

E-no.	**FD**

The numbers can be found on the rating plate, after removal of the grease filter, inside the extractor hood.
Enter the numbered in the above fields.

Intended use

▷ This extractor hood complies with the stipulated safety regulations. Improper use may result in injury or damage.

▷ The extractor hood may be used in the household only. The manufacturer is not liable for damage which is caused by improper use or incorrect operation.

▷ The manufacturer cannot be made responsible for damage which can be attributed to non-observance of the safety instructions.

⚠ RISK OF INJURY
Do not allow children to play with the extractor hood! Adults and children must never operate the appliance unsupervised

– if they are not physically or mentally capable of doing so,
– or if they do not have the knowledge and experience to operate the appliance correctly and safely.

Technical safety

▷ The extractor hood left the factory in perfect condition. Nevertheless check the appliance for visible damage before installation. If it is damaged, do not switch it on!

▷ If the power cord of the extractor hood is damaged, it must be replaced by the manufacturer, his customer service or a similarly qualified person to prevent hazardous situations.

▷ Only a qualified technician may install (including electrical connection), service or repair the extractor hood. Always isolate the extractor hood by pulling out the mains plug or switching off the fuse!

▷ If the appliance is improperly installed, serviced or repaired, the user may be placed in considerable danger for which the manufacturer is not liable.

▷ Changes to the electrical or mechanical installation are dangerous and must not be undertaken! They may also cause the extractor hood to malfunction.

Simultaneous operation of the extractor hood with a heating appliance which is dependent on ambient air

▷ Heating appliances which are dependent on ambient air, e.g. gas, oil, wood, or solid-fuel heaters, instantaneous water heaters, hot water boilers, hobs or ovens, and which draw combustion air out of the installation room and whose exhaust gases are conveyed to the exterior by a flue.

⚠ RISK OF POISONING
If the extractor hood is operated at the same time as a heating appliance which is dependent on ambient air, there is a risk of poisoning due to combustion gases being drawn back in.

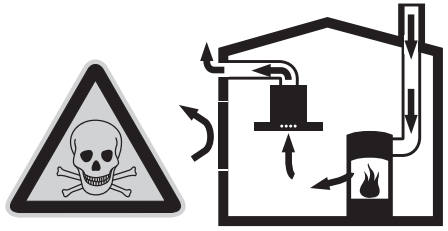

▷ Safe operation is possible provided the low pressure in the installation room of the heating appliance does not exceed 4Pa (0.04mbar). This can be achieved if the combustion air can flow through non-closable openings, e.g. in doors, windows, in conjunction with air intake/exhaust air wall boxes or by other technical measures.

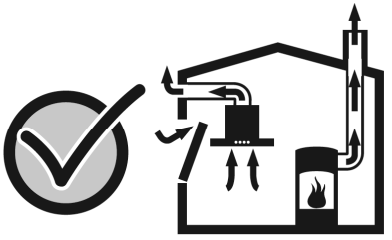

▷ Adequate intake air must therefore always be provided.

▷ An intake/exhaust air wall box alone does not ensure compliance with the limit value.

NOTE: When making your evaluation, always consider the entire ventilation system in the home. Include the advice of a competent heating engineer when making your evaluation.

▷ If the extractor hood is used in circulating air mode only, it can be operated without any restrictions.

Special information for gas cookers

▷ When installing the extractor hood above gas hobs, observe the appropriate national statutory regulations (e.g. in Germany: Technische Regeln Gasinstallation TRGI).

▷ Observe the currently valid installation regulations and instructions of the gas appliance manufacturer.

▷ During installation, ensure that only one side of the extractor hood is situated directly next to a high-sided unit or a wall. Otherwise, there is a risk of heat build-up. The gap between the extractor hood and the wall or high-sided unit must be at least 50 mm.

⚠ RISK OF BURNS
Do not operate more than 2 gas cooking areas simultaneously over a period of max.
15 minutes at maximum thermal load. Due to the effect of the heat there is a risk of burns if the surfaces of the housing are touched!

▷ Note that one large burner of more than 5 kW (Wok) is equivalent to the power of 2 gas burners.

▷ The extractor hood may be damaged by the intense heat.

▷ Never operate a gas cooking area without a cooking utensil on it. Regulate the flame in such a way that it does not project over the cooking utensil.

Proper use

▷ Clean the extractor hood thoroughly before using for the first time.

▷ Before cleaning and servicing the extractor hood, isolate it from the power supply by pulling out the mains plug or switching off the fuse.

▷ Bulbs (especially halogen bulbs) become very hot during operation. Even some time after the appliance has been switched off, there is still a risk of burns!

▷ Before changing bulbs, isolate the extractor hood from the power supply and leave the bulbs to cool down!

▷ Do not operate the extractor hood without bulbs inserted.

▷ Always switch on the extractor hood if a hotplate is being used. If the extractor hood is not switched on, condensation may form. As a result, the appliance may corrode.

▷ Do not place any objects on the extractor hood.

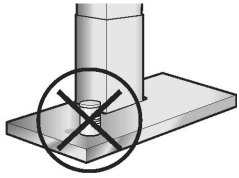

⚠ RISK OF FIRE

Do not flambé under the extractor hood or work with a naked flame. When switched on, the extractor hood draws flames into the filter. There is a risk of fire due to deposits on the grease filter!

▷ Do not leave pans, frying pans or deep-fat fryers unattended if you are cooking food with oils or fats, e.g. chips. Overheated oils or fats can easily ignite!

▷ A risk of fire can be prevented by cleaning the grease filters regularly and changing the activated-carbon filter in good time.

▷ Never operate the extractor hood without grease filters.

Correct installation

▷ Check the manufacturer's specifications for the cooker to determine whether an extractor hood can be operated over it.

▷ If the manufacturer of the cooker has not specified any significant safety distances, the following minimum distances apply

– **550 mm** between electric hob and the lower edge of the extractor hood
– **650 mm** between gas hob (upper edge of pan support) and the lower edge of the extractor hood,

(see fig. 1, page 2).

▷ If various cookers are used, the greatest indicated distance applies.

▷ The width of the extractor hood must correspond to the width of the cooking area.

▷ The extractor hood must not be installed over a solid fuel heating appliance which may be a fire risk (e.g. flying sparks) unless the heating appliance has a closed, non-detachable cover and the country-specific regulations are observed. This restriction does not apply to gas cookers and gas hobs.

▷ To avoid damaging the hob, cover it when installing the extractor hood.

Operating modes

▷ The extractor hood can be used in exhaust air and circulating air mode.

Exhaust-air mode



The air which is drawn in is cleaned by the grease filters and conveyed to the exterior by a pipe system.

Appliance dimensions Exhaust air

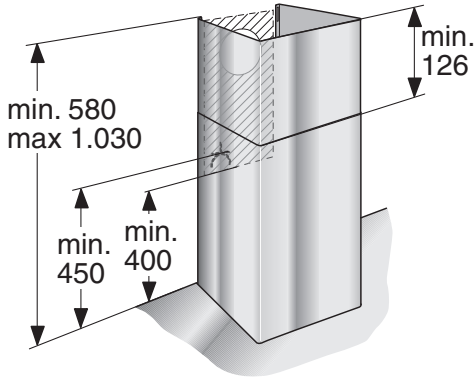

Circulating-air mode



The air which is drawn in is cleaned by the grease filters **and** an activated carbon filter and conveyed back into the kitchen.

An activated carbon filter must be installed to bind odours in circulating-air mode (see "Removing and installing the grease filters").

The complete installation set as well as the replacement filters are available from specialist outlets, customer service or the Online Shop. The accessory number can be found at the end of the operating instructions.

Appliance dimensions Circulating air

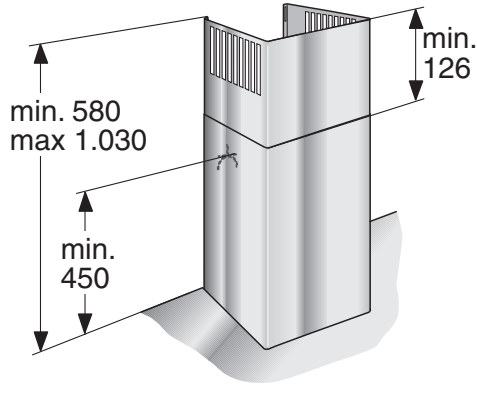

▷ The description of the operation applies to several appliance models. It is possible that individual features are described which do not apply to your appliance.

NOTE: It is recommended to switch on the blower when you start cooking and not to switch it off again until several minutes after you have finished cooking. In this way the kitchen fumes are removed most effectively.

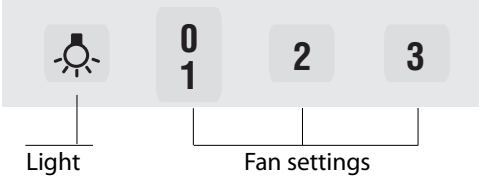

Switching on the fan and selecting the fan settings

▷ Press button 1. If kitchen fumes are thicker switch to setting 2 or 3.

Switching off the fan

▷ Press button **0.**

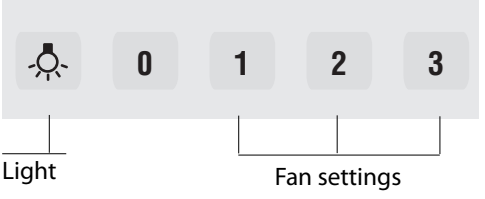

Light

▷ The light can be switched on and off independently of the fan.

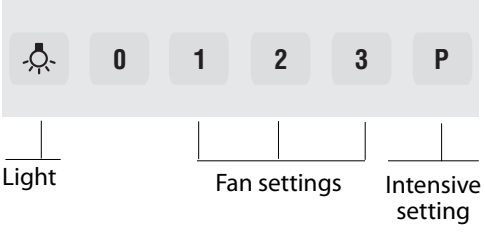

For appliances with Intensive setting

The Intensive setting **P** generates maximum performance. It can be used if thick fumes or strong odours occur temporarily.

Looking after the appliance

▷ Suitable cleaning agents and care products for your appliance can be purchased via the Hotline or from the Online Shop (see cover page).

Appliance surfaces

NOTE: Observe the warranty regulations in the enclosed service booklet.

▷ The appliance surfaces and controls are scratch-sensitive. Therefore observe the following cleaning instructions:

- Avoid cleaning the extractor hood with dry cloths, abrasive sponges, scouring agents, cleaning agents containing sand, soda, acid, chlorine or any other aggressive substances.
- Clean the appliance surfaces and controls with a soft, damp cloth, washing-up liquid or a mild window cleaner only.
- Do not scrape off dried dirt, but moisten with a damp cloth.
- Clean carefully in the area of the controls to avoid liquid from getting into the electronics.

NOTE: Clean the stainless steel surfaces in the direction of the ground surface only!
Do not use stainless steel cleaner for the control buttons!

Metal-mesh grease filters

▷ The metal-mesh grease filters absorb the grease particles from the kitchen fumes.

▷ The filter mats consist of fire-proof metal.

⚠ RISK OF FIRE
As the filters become more saturated with greasy residue, the flammability increases. The function of the extractor hood may also be impaired.

▷ The risk of fire is prevented by cleaning the metal-mesh grease filters in good time.

▷ When cleaning the grease filters, also remove grease deposits from the accessible parts of the housing with a damp cloth.

Cleaning the metal-mesh grease filters ...

▷ Under normal operation (daily 1 to 2 hours), the metal-mesh grease filters must be cleaned 1x month.

... in the dishwasher

▷ The metal-mesh grease filters can be cleaned in the dishwasher. Slight discolouration may occur but this will not affect the function of the grease filters.

▷ The filters must be placed loosely in the dishwasher. They must not be wedged in.

NOTE: Do not clean heavily saturated metal-mesh grease filters together with utensils.

... by hand

▷ When cleaning by hand, soak the grease filters in a hot detergent solution, brush off the dirt, rinse thoroughly and leave to dry.

▷ Do not use any aggressive, acidic or alkaline cleaning agents.

▷ If dirt is particularly stubborn, we recommend using a special grease solvent spray. This can be ordered via the Online Shop.

▷ Before removing and installing the grease filters, always follow the instructions and warnings in the chapter entitled "Safety instructions"!

Removing and installing the metal-mesh grease filters

1. Open the lock and fold down the grease filters. In doing so, hold the underside of the grease filters with your other hand.

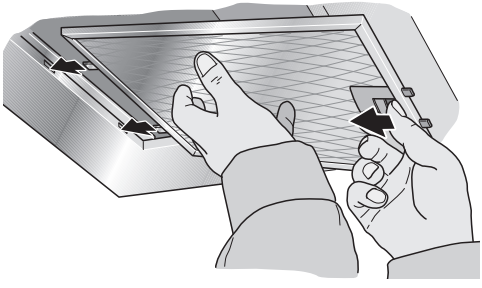

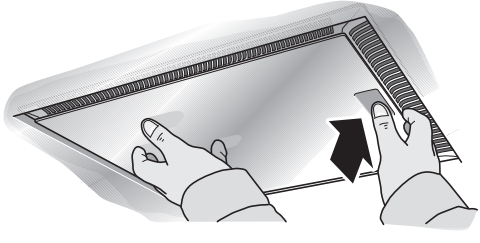

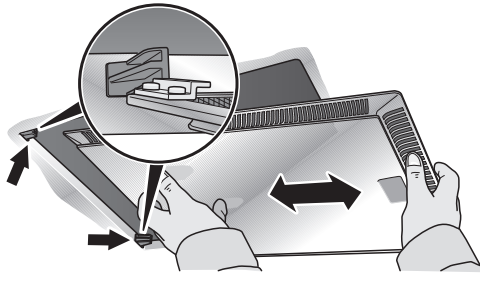

(for appliances with edge extraction)

2. Clean the grease filters.
3. Reinsert the cleaned grease filters.

▷ Activated carbon filters bind the odours in circulating-air mode.

Installing and removing the activated carbon filters

1. Remove the grease filters (see Removing and installing the metal-mesh grease filters).

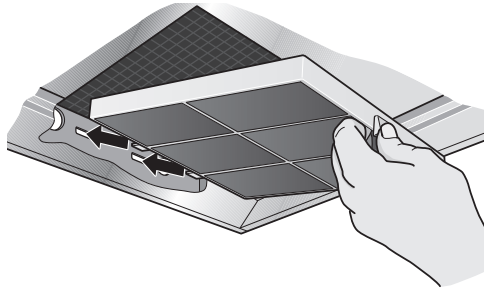

2. Insert the activated carbon filter.
3. Lock the catch.
4. Reinsert the grease filters (see Removing and installing the metal-mesh grease filters).

Changing the activated carbon filter

▷ Under normal operation (daily 1 to 2 hours) the activated carbon filters must be replaced approximately 2x year.

▷ The activated carbon filter is available from specialist outlets, customer service or the Online Shop (see Optional accessories). Use original filters only.

▷ Activated carbon filters do not contain any pollutants. They can be disposed of in the household refuse.

Changing the bulbs

▷ Before changing the bulbs, always follow the instructions and warnings in the chapter entitled "Safety instructions"!

▷ The description of changing the bulbs applies to several appliance models.

NOTE: Observe the warranty regulations in the enclosed service booklet.

Changing the halogen bulbs

Halogen bulbs become very hot during operation. Even some time after the appliance has been switched off, there is still a risk of burns!

▷ Before changing the halogen bulbs, ensure that they have cooled down fully.

1. Carefully remove the bulb ring with a suitable tool.

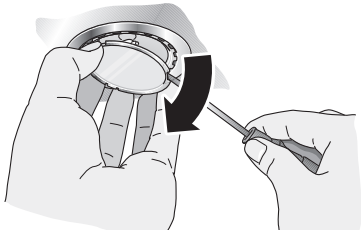

2. Replace the defective bulb with a new one of the same type and equivalent power (see rating plate).

NOTE: When inserting halogen bulbs, do not touch the glass tube. Therefore use a clean cloth when inserting the bulb.



3. Reinsert the bulb cover.
4. Restore the power supply by inserting the mains plug or switching on the fuse.

Changing the filament bulbs

1. Lift the bulb cover slightly.
2. Push the bulb cover towards the middle of the appliance.

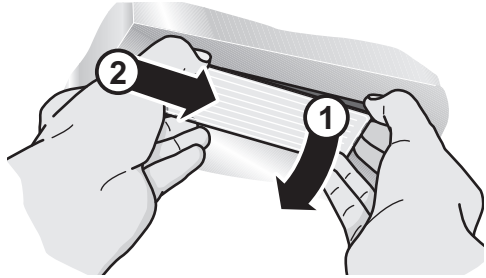

3. Replace the defective bulb with a new one of the same type and equivalent power (see rating plate).
4. Reinsert the bulb cover.

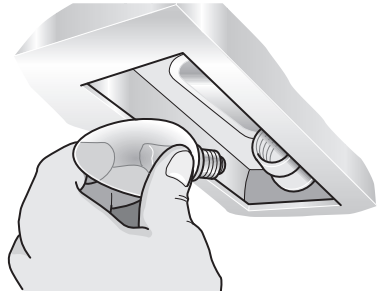

5. Restore the power supply by inserting the mains plug or switching on the fuse.

NOTE: If the light does not function, check whether the bulbs have been inserted correctly.

▷ Defective bulbs should be replaced immediately to avoid overloading the remaining bulbs.

▷ Prior to installation, always follow the instructions and warnings in the chapter entitled "Safety instructions"!

Exhaust-air mode

▷ The exhaust air is conveyed upwards via a ventilation shaft or directly through the outer wall to the exterior.

NOTE: The exhaust air must not be conveyed into a functioning smoke or exhaust gas flue or into a shaft which is used to ventilate installation rooms which contain heating appliances.

▷ Before conveying the exhaust air into a non-functioning smoke or exhaust gas flue, obtain the consent of the appropriate heating engineer.

▷ Discharge exhaust air in accordance with the official and statutory regulations (e.g. regional building laws).

▷ If the exhaust air is conveyed through the outer wall, a telescopic wall box should be used.

To ensure optimum performance, the extractor hood requires:

– a short, straight exhaust air pipe and
– the largest possible pipe diameter.

▷ If pipe bends cannot be avoided, ensure the largest possible radii.

NOTE: If long, rough exhaust air pipes, a lot of pipe bends or pipe diameters less than 150 mm are used, the air capacity will be less than optimum and there will be an increase in noise.

▷ Use only pipes or hoses made of non-combustible material for installation of the exhaust air duct.

▷ The manufacturer of the extractor hoods is not responsible for complaints which can be attributed to planning and design of the pipework.

Connecting pipes

▷ The diameter of the exhaust air pipes should not be less than 150 mm.

▷ **Round pipes:**
We recommend an inner diameter of 150 mm, however at least 120 mm.

▷ **Flat ducts** must have the same inner cross-section as round pipes.
There should be no sharp bends.
Ø 150 mm approx. 177 cm^2
Ø 120 mm approx. 113 cm^2

▷ **If pipe diameters differ:**
Use sealing strips.

Connection of 150 mm ø exhaust air pipe (recommended size)

▷ Attach exhaust air pipe directly to the air-pipe connector and seal appropriately. If using an aluminium pipe, smooth the connection area beforehand.

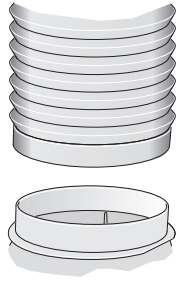

Connection of 120 mm ø exhaust air pipe

▷ Attach reducing connector directly to the air-pipe connector.

▷ Attach exhaust air pipe to the reducing connector.

▷ Seal both joints appropriately.

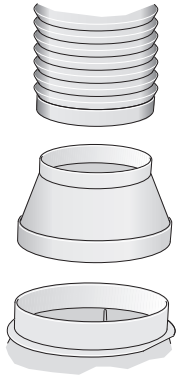

Electrical connection

▷ Before connecting the appliance to the power supply, always follow the instructions and warnings in the chapter entitled "Safety instructions"!

▷ The extractor hood may only be connected by a qualified electrician who is familiar with the regulations of the relevant electricity supply company.

⚠ RISK OF INJURY
If the power cord of the extractor hood is damaged, it must be replaced by the manufacturer, his customer service or a similarly qualified person to prevent hazardous situations.

▷ The extractor hood may be connected to a correctly installed earthed socket only.

▷ Attach the earthed socket as directly as possible behind the flue duct.

– The earthed socket should be connected via its own circuit.
– If the earthed socket is no longer accessible following installation of the extractor hood, a disconnector must be fitted as for a permanent connection.

If a permanent connection is required

▷ A disconnector must be provided on the installation side. Switches with a contact opening of more than 3 mm and all-pole disconnection are regarded as disconnectors. This includes LS switches, fuses and contactors.

Electrical specifications

WARNING: THIS APPLIANCE MUST BE EARTHED

IMPORTANT: Fitting a Different Plug:

The wires in the mains lead are coloured in accordance with the following code:

Green and Yellow	– Earth
Blue	– Neutral
Brown	– Live

If you fit your own plug, the colours of these wires may not correspond with the identifying marks on the plug terminals.

This is what you have to do:

1. Connect the green and yellow (Earth) wire to the terminal in the plug marked 'E' or with the symbol ⏚, or coloured green or green and yellow.
2. Connect the blue (Neutral) wire to the terminal in the plug marked 'N' or coloured black.
3. Connect the brown (Live) wire to the terminal marked 'L', or coloured red.

The required connection data can be found on the rating plate inside the appliance when the grease filters have been removed.

Length of the power cord: approx. 1.30 m.

This extractor hood complies with the EC interference suppression regulations.

The extractor hood is designed to be mounted on the wall.

▷ During installation, optional accessories may also require fitting.

▷ Observe the minimum distance between hob and extractor hood (see "Safety instructions")!

▷ Avoid damaging the sensitive surfaces!

Preparing the wall

⚠ **RISK OF INJURY, DAMAGE TO PROPERTY**

Before drilling the holes for the designated installation location, check for concealed electrical cables and other lines.

▷The wall must be level and vertical.

▷ The enclosed screws and wall plugs are suitable for solid brickwork. Use the appropriate fixing materials for other wall structures (e.g. plaster board, porous concrete, poroton bricks).
Ensure that the wall has adequate load bearing capacity.

▷ Ensure that the depth of the drilled holes corresponds with the length of the screws.

▷ Ensure that the wall plugs are secure.

Max. weight in kg: 40

Design subject to modification in line with technical development.

Installation preparations

1. Mark a centre line on the wall from the ceiling to the lower edge of the extractor hood.
2. Using the enclosed template, mark positions for the screws and, to facilitate attachment, the contour of the attachment area. The lower edge of the template corresponds to the lower edge of the extractor hood.
3. Drill 2x 8 mm holes for attachment of the extractor hood and 2x 8 mm holes for the fixing bracket for the flue duct and press in wall plugs flush with the wall.
4. Screw on the fixing bracket for the flue duct.

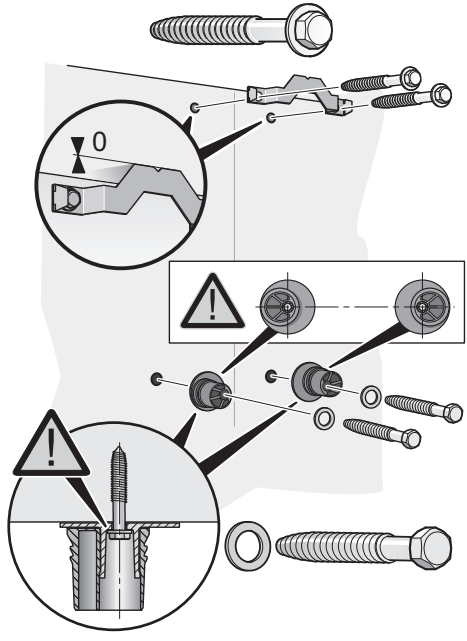

5. Screw on the brackets for the extractor hood: **hand tight, max. 3 Nm.**
Ensure that the washers and brackets are positioned correctly!

Attachment and alignment

1. Initially remove the protective foil from the back of the extractor hood and, following installation, remove foil completely.
2. Mount the extractor hood, ensuring that the back is attached firmly to the brackets Ⓐ.
3. Align the extractor hood horizontally by turning the brackets..

   If required, the extractor hood can be moved to the right or left Ⓑ.

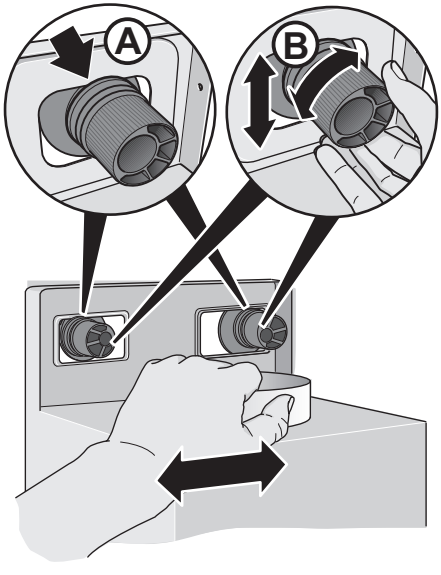

Locking screws and locking caps

1. Mark the holes for the safety screws. Detach the extractor hood, drill holes for the safety screws and press in wall plugs flush with the wall.
2. Attach the extractor hood and screw in the safety screws tightly.
3. Press the safety caps with the arrow upwards onto the brackets until they click into position Ⓒ.

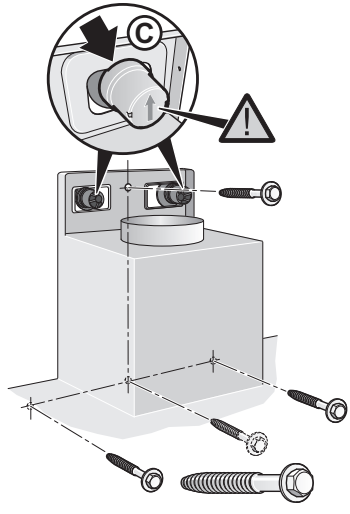

⚠ RISK OF INJURY

Check that all locking screws and locking caps have been attached securely!

4. Connect the pipes (see "Connecting pipes").
5. Connect to the power supply (see "Electrical connection").

Removing the safety caps

▷ Remove the locking caps from the brackets using a suitable tool, e.g. a flat-blade screwdriver.

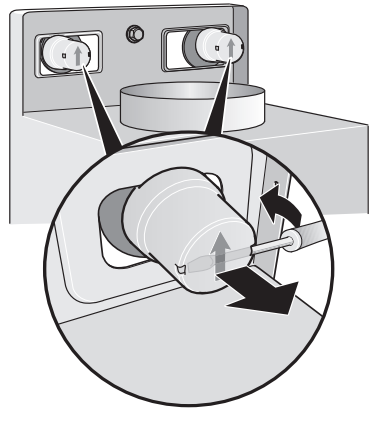

Installing the flue ducts

⚠ RISK OF INJURY
The insides of the flue ducts may have sharp edges. We recommend wearing protective gloves during installation.

1. Separate the flue ducts. To do this, remove the adhesive tape.
2. Remove the protective film from both flue ducts.
3. Insert one flue duct into the other.

NOTE: Avoid scratching the flue ducts when inserting them, e.g. by placing the installation template as protection over the edge of the outer flue duct.

▷ Note the position of the slots in the flue duct!

– **Exhaust-air mode:** Slots of the inner flue duct downwards.
– **Circulating-air mode:** Slots of the inner flue duct upwards.

4. Place flue ducts on the extractor hood, push the inner flue duct upwards and attach the left and right sides to the fixing bracket.



5. Screw the inner flue duct with 2 screws to the sides of the fixing bracket.

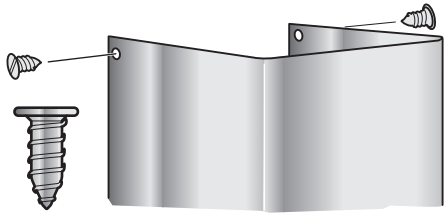

Notes

Notes

Notes

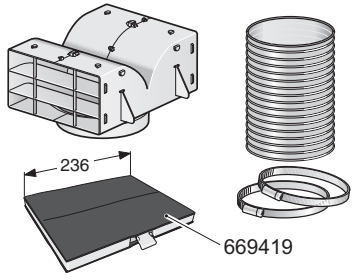	**DHZ5225**
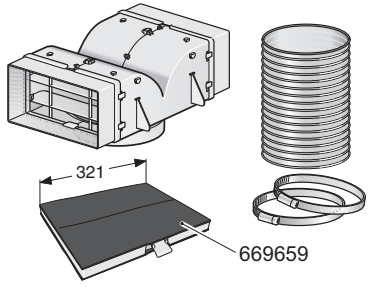	**DHZ5235**
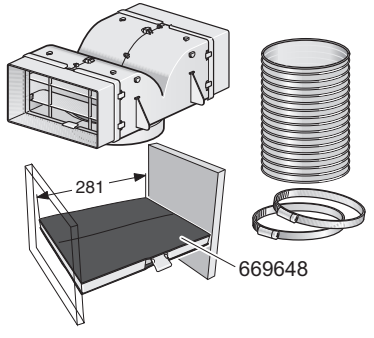	**DHZ5245**

E-Mail: **bosch-infoteam@bshg.com**
Online-Shop: **www.bosch-eshop.com**

9000 414 689
Printed in Germany 0109 Es.