30" Built-In Bottom-Freezer

Benchmark® Series – Stainless Steel B30BB130SS

B30BB130SS
Stainless Steel

Also available in:

Custom Panel
B30IB100SP

The Benchmark 30" stainless steel built-in refrigerator, redesigned with premium metal interior, keeps food fresh longer and has efficient and precise cooling and humidity control.

Features & Benefits

- VitaFresh® technology keeps food fresh up to 3x longer* with precise humidity and temperature control, on a full color UI.
- Stainless steel backwall and bright LEDs keep the spotlight on your food.
- Metal door bins, split shelves and three-tier freezer drawers to help you organize the way you want.
- Full width deli drawer can accommodate large charcuterie or veggie platters for when you're ready to serve.
- Internal water dispenser with UltraClarityPro® filter removes over 99.9% of impurities.

Dimensions and Weight	
Overall width (inches)	29 3/4"
Overall height (inches)	83 9/16" Min. – 85 1/2" Max.
Overall depth with doors and handles (inches)	26 7/8"
Overall depth without doors and handles (inches)	24"
Required cutout size (HxWxD) (inches)	84" x 30" x 24"
Net /gross weight (approx.) (lbs.)	496 / 535.3
Style	
Door panel style	Stainless Steel
Handle style	Bar Handle
Interior finish	SS Backwall
Reversible door	Yes
Number of doors	2
Innovation	
Wi-Fi-enabled for control with Home Connect® app	Yes
Remote monitoring and control	Yes
Remote system upgrade	Yes
Performance	
VitaFresh®	Yes
Evaporators / Compressors	2 / 2
Quick Ice	Yes
Automatic defrosting	Yes
Modes: Normal, Vacation, Eco, Sabbath, Shopping, Demo, SuperCool, SuperFreeze®	
Internal water dispenser	Yes
One Touch BottleFill	Yes
Water filter (6 months)	Yes
AirFresh® filter	Yes
Ethylene filter (6 months)	Yes

Capacity and Storage	
Total capacity (cu. ft.)	16.5
Refrigerator capacity (cu. ft.)	10.9
Freezer capacity (cu. ft.)	5.6
Full-extension freezer storage drawer	Yes
Tiered freezer drawer	3-Tier
Full extension deli drawer	1
Full extension VitaFresh® drawer, 9 preset modes	1
Door bins	2 Adjustable, 1 Fixed
General Features	
Color touchscreen control panel	Yes
Water filter replacement indicator	Yes
Ice maker	Yes
Ice On / Off	Yes
Ice production (24 hrs.), ice cubes (lbs.)	5.5
Ice storage capacity (lbs.)	6.6
LED interior and drawer lighting	Yes
Independent cooling systems	2
SoftClose® Door	Yes
SoftClose® Drawers	Yes
Open Door Assist	No
Door alarm	Yes
Childproof lock	Yes
Cooling system	MultiAirFlow™
Maximum sound level	39 dBA
Star-K certified Sabbath mode	TBD
Energy Efficiency	
ENERGY STAR® Certified	Yes
Energy consumption (kWh / yr)	560

Home Connect

*As compared to a Bosch refrigerator without VitaFresh®. Results may vary among different foods.

Accessories: To purchase Bosch accessories, cleaners & parts please visit www.bosch-home.com/us/store or call 1-800-944-2904 (Mon to Fri 5 am to 6 pm PST, Sat 6 am to 3 pm PST).

Notes: All height, width and depth dimensions are shown in inches. BSH reserves the absolute and unrestricted right to change product materials and specifications, at any time, without notice. Consult the product's installation instructions for final dimensional data and other details prior to making cutout.

Warranties: Please see Use & Care manual or Bosch website for statement of limited warranty.

For more information on our entire line of products, go to www.bosch-home.com/us or call 1-800-944-2904

© BSH Home Appliances Corporation. All rights reserved. Bosch is a registered trademark of Robert Bosch GmbH.

30" Built-In Bottom-Freezer

Benchmark® Series – Stainless Steel B30BB130SS

Operating Temperature
Refrigerator: 33°F (1°C) to 43°F (6°C)
Freezer Drawer: -11°F (-24°C) to 3°F (-16°C)
VitaFresh® Drawer: 9 preset modes (°F/humidity) Vegetables (32°F/high), Fruit (32°F/medium), Vegetables & Fruit (32°F/medium), Meat (30°F/low), Fish (30°F/low), Deli (34°F/ low), Cheese (35°F/low), Beverages (34°F/low), Custom
SuperCool: 34°F (1°C) for approx. 6 hours
SuperFreeze®: -15°F (-26°C) for approx. 8 hrs.

Installation Features	
Four point front adjustable with 4 wheels	Yes
Attachment method to cabinetry	4 fixation brackets, Fixed at 4 corners of appliance, no visible screws
Front serviceable	Yes
Anti-tip bracket included	Yes
Frame kit included	Yes

Technical Specs	
Required power supply	110-120 V, 60 Hz, 10 Amp Min.
Plug type	120V-3 Prong
Power cord length (in.)	118"

Warranty	
Limited warranty, parts & labor	1 Year
Limited warranty, non-electronic parts (parts only, no labor)	2 Years
Electronic parts (parts only, no labor)	5 Years
Lifetime Limited: Stainless steel door if rust-through occurs (parts only, no labor)	Lifetime

Optional Accessories

BORPLFTR55
Replacement UltraClarityPro® water filter

11037377
Water filter bypass (part no.)

17006999
Replacement ethylene starter kit (part no.)

17007000
Replacement ethylene filter packets (part no.)

Installation Details

Product Dimensions

Measurements in inches (mm)

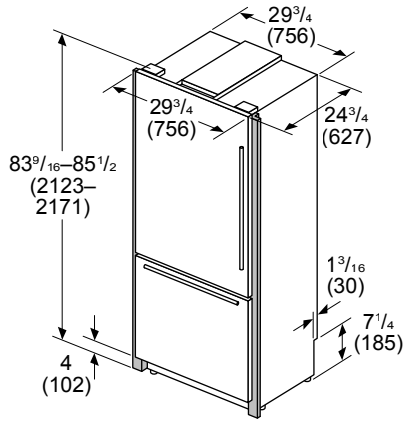

NOTE: A connection kit should be used when installing two bottom freezer refrigerators side-by-side. Side-by-side connection kit: **BOSCOMBI10**

Base Detail Dimensions

Measurements in inches (mm)

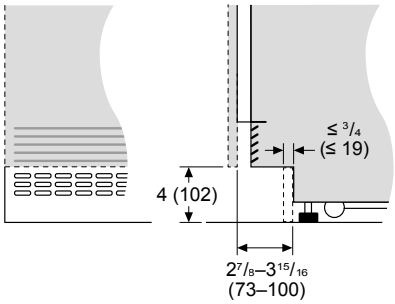

PFAS

Accessories: To purchase Bosch accessories, cleaners & parts please visit www.bosch-home.com/us/store or call 1-800-944-2904 (Mon to Fri 5 am to 6 pm PST, Sat 6 am to 3 pm PST).

Notes: All height, width and depth dimensions are shown in inches. BSH reserves the absolute and unrestricted right to change product materials and specifications, at any time, without notice. Consult the product's installation instructions for final dimensional data and other details prior to making cutout.

Warranties: Please see Use & Care manual or Bosch website for statement of limited warranty.

For more information on our entire line of products, go to www.bosch-home.com/us or call 1-800-944-2904

© BSH Home Appliances Corporation. All rights reserved. Bosch is a registered trademark of Robert Bosch GmbH.

30" Built-In Bottom-Freezer

Benchmark® Series – Stainless Steel B30BB130SS

Installation Details

Proud Install Top View Clearance

Measurements in inches (mm)

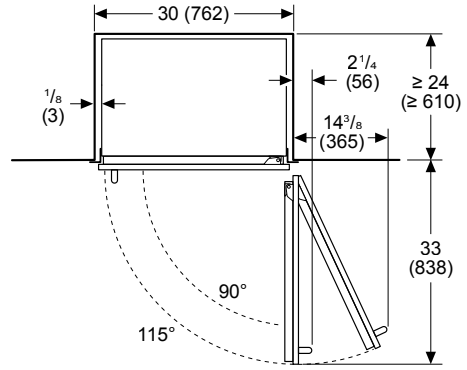

Proud Install Cutout Dimensions

Measurements in inches (mm)

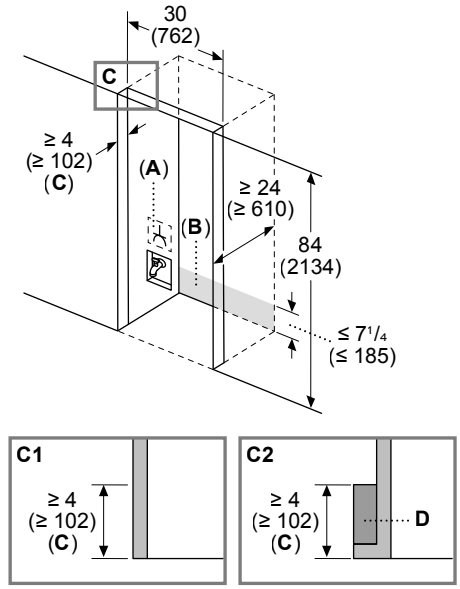

A: Outlet
B: Area for water and electric line routing

C: Furniture return
C1: Frameless cabinet
C2: Framed cabinet

D: Filler

Flush Install Top View Clearance

Measurements in inches (mm)

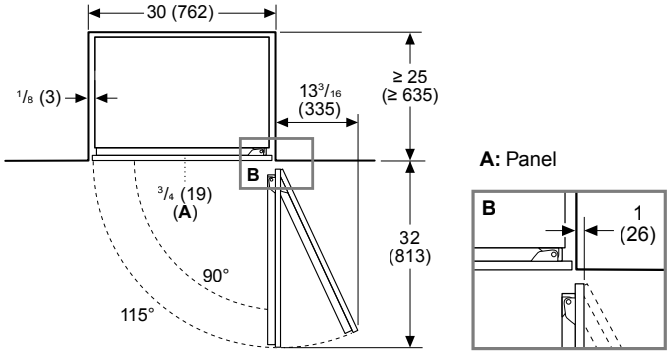

Flush Install Cutout Dimensions

Measurements in inches (mm)

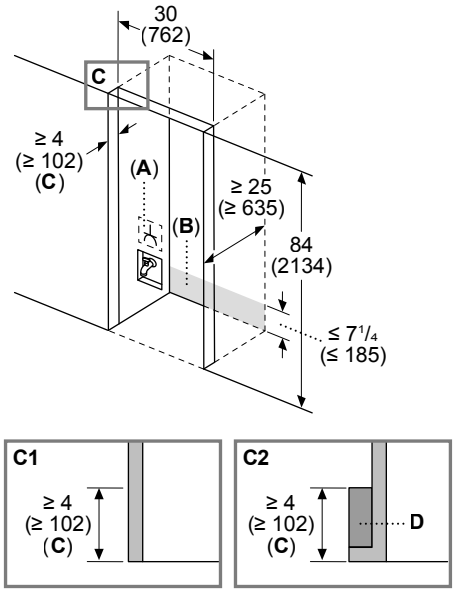

A: Outlet
B: Area for water and electric line routing

C: Furniture return
C1: Frameless cabinet
C2: Framed cabinet

D: Filler

Accessories: To purchase Bosch accessories, cleaners & parts please visit www.bosch-home.com/us/store or call 1-800-944-2904 (Mon to Fri 5 am to 6 pm PST, Sat 6 am to 3 pm PST).

Notes: All height, width and depth dimensions are shown in inches. BSH reserves the absolute and unrestricted right to change product materials and specifications, at any time, without notice. Consult the product's installation instructions for final dimensional data and other details prior to making cutout.

Warranties: Please see Use & Care manual or Bosch website for statement of limited warranty.

For more information on our entire line of products, go to www.bosch-home.com/us or call 1-800-944-2904

© BSH Home Appliances Corporation. All rights reserved. Bosch is a registered trademark of Robert Bosch GmbH.

30" Built-In Bottom-Freezer

Benchmark® Series – Stainless Steel B30BB130SS

Installation Details

Hinge Clearance

Measurements in inches (mm)

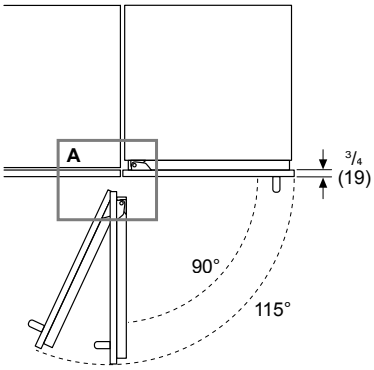

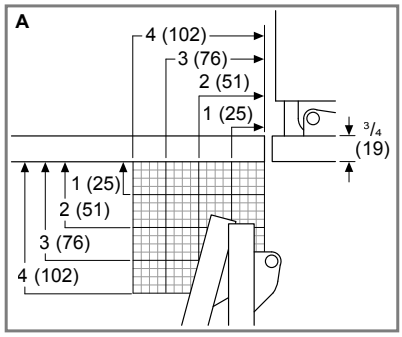

Tipping Radius Clearances

Measurements in inches (mm)
Front Tipping Radius

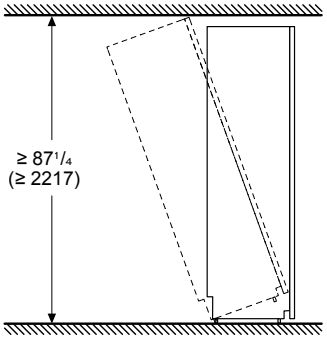

Measurements in inches (mm)
Side Tipping Radius

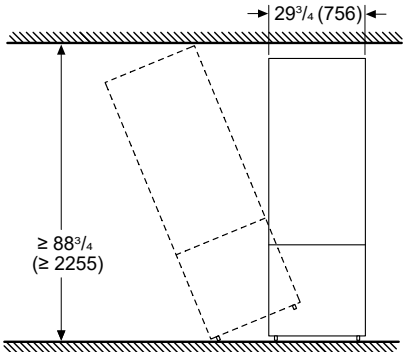

Accessories: To purchase Bosch accessories, cleaners & parts please visit www.bosch-home.com/us/store or call 1-800-944-2904 (Mon to Fri 5 am to 6 pm PST, Sat 6 am to 3 pm PST).

Notes: All height, width and depth dimensions are shown in inches. BSH reserves the absolute and unrestricted right to change product materials and specifications, at any time, without notice. Consult the product's installation instructions for final dimensional data and other details prior to making cutout.

Warranties: Please see Use & Care manual or Bosch website for statement of limited warranty.

For more information on our entire line of products, go to www.bosch-home.com/us or call 1-800-944-2904

© BSH Home Appliances Corporation. All rights reserved. Bosch is a registered trademark of Robert Bosch GmbH.