KITCHEN DESIGN *and* PLANNING GUIDE

VOLUME 8

Thermador®

Thermador

TABLE *of* CONTENTS

Thermador has been elevating expectations since 1916. Experience unparalleled luxury, leading performance, and innovative smart home technology across our cooling, cooking, and dish care collections.

SPEC SHEET DOWNLOAD TOOL

RANGES *8*

RANGETOPS *42*

BUILT-IN OVENS *54*

BUILT-IN MICROWAVES & DRAWERS *81*

COOKTOPS *96*

VENTILATION *118*

REFRIGERATION *162*

DISHWASHERS *232*

BUILT-IN COFFEE MACHINE *242*

PRODUCT WARRANTY *252*

EXPERIENCE THERMADOR *253*

PRODUCT INDEX *254*

SPEC SHEET DOWNLOAD TOOL

Click or tap a product number to download a spec sheet.

Thermador

Pro Harmony® Ranges

- ★ PRD486WDHU
- ★ PRD364WDHU
- ★ PRD366WHU
- ★ PRI36LBHU
- PRD305WHU
- PRD304WHU
- ★ PRI30LBHU
- ★ PRG486WDH
- ★ PRG364WDH
- ★ PRG366WH
- PRG305WH
- PRG304WH

Pro Grand® Ranges

- ★ PRD606WESG
- ★ PRD606WEG
- ★ PRD48WISGU
- ★ PRD48WDSGU
- ★ PRD486WIGU
- ★ PRD486WDGU
- ★ PRG486WDG
- ★ PRD364WIGU
- ★ PRD364WDGU
- ★ PRD366WGU
- ★ PRG364WDG
- ★ PRG366WG

Professional Rangetops

- PCG486WD
- PCG364WD
- PCG366W
- PCG305W

Built-In Ovens

- ★ PODS301W
- ★ MEDS301WS
- MC30WP
- MC30WS
- ★ POD301W
- ★ POD301LW
- ★ POD301RW
- ★ PO301W
- ★ ME301YP
- ★ MED301WS
- ★ MED301LWS
- ★ MED301RWS
- ★ ME301WS
- ★ PODS302W
- ★ MEDS302WS
- ★ PODMCW31W
- ★ MEDMCW31WS
- ★ PODMC301W
- ★ MEDMC301WS
- ★ POM301W
- ★ MEM301WS
- ★ POD302W
- ★ POD302LW
- ★ POD302RW
- ★ PO302W
- ★ ME302YP
- ★ MED302WS
- ★ MED302LWS
- ★ MED302RWS
- ★ ME302WS

Built-In Microwaves

- MD30WS
- MD24WS
- MB30WP
- MB30WS
- MU30WSU

Warming & Storage Drawers

- WD30W
- WD30WC
- SD30WC
- SDS30WC

Gas Cooktops

- SGSXP365TS
- SGSP365TS
- SGSX365TS
- SGS365TS
- SGSXP305TS
- SGSP305TS
- SGSX305TS
- SGS305TS

Induction Cooktops

- ★ CIT36YWB
- ★ CIT36YWBB
- ★ CIT367YGS
- ★ CIT367YG
- ★ CIT367YMS
- ★ CIT367YM
- CIT365YB
- ★ CIT30YWBB
- CIT304YM
- CIT304YB

Electric Cooktops

- CET366YB
- CEM366TB
- CET305YB
- CEM305TB

Wall Hoods

- ★ PH60GWS
- ★ PH54GWS
- ★ PH48GWS
- ★ PH42GWS
- ★ PH36GWS
- PH48HWS
- PH36HWS
- PH30HWS
- ★ HMWB36WS
- ★ HMWB30WS
- ★ HMWB481WS
- ★ HMWB361WS
- ★ HMDW36WS
- ★ HMDW30WS

★ *Features Thermador Home Connect®*

Wall Chimney Hoods

- HPCN48WS
- HPCN36WS
- ★ HMCB36WS
- ★ HMCB30WS
- ★ HDDB36WS
- ★ HDDB30WS

Island Hoods

- ★ HPIN54WS
- ★ HPIN42WS
- ★ HMIB42WS
- ★ HMIB36WS

Downdraft Hoods

- UCVP36XS
- UCVM36XS
- UCVM30XS

Custom Hood Inserts

- ★ VCIN60GWS
- ★ VCIN54GWS
- ★ VCIN48GWS
- ★ VCIN42GWS
- ★ VCIN36GWS
- ★ VCI3B36ZS
- ★ VCI3B30ZS
- ★ VCI6B36ZS
- ★ VCI6B30ZS

Fresh Food Columns

- ★ T23IR905SP
- ★ T24IR905SP
- ★ T30IR905SP
- ★ T36IR905SP

Freezer Columns

- ★ T18ID905LP
- ★ T18ID905RP
- ★ T24ID905LP
- ★ T24ID905RP
- ★ T18IF905SP
- ★ T24IF905SP
- ★ T30IF905SP
- ★ T36IF905SP

Wine Preservation Columns

- ★ T18IW905SP
- ★ T24IW905SP

Bottom Freezers

- ★ T30IB905SP
- ★ T36IB905SP
- ★ T36IT905NP
- ★ T36IT903NP
- ★ T30BB925SS
- ★ T36BB925SS
- ★ T36BT925NS
- ★ T30BB915SS
- ★ T36BB915SS
- ★ T36BT915NS
- ★ T36FT820NS
- ★ T36FT810NS

Under-Counter Refrigeration

- T24UR925LS
- T24UR925RS
- T24UR915LS
- T24UR915RS
- T24UR905LP
- T24UR905RP
- T24UW925LS
- T24UW925RS
- T24UW915LS
- T24UW915RS
- T24UW905LP
- T24UW905RP
- T24UR925DS
- T24UR915DS
- T24UR905DP
- T24UC925DS
- T24UC915DS
- T24UC905DP

Dishwashers

- ★ DWHD770CFP
- ★ DWHD770CFM
- ★ DWHD770CPR
- ★ DWHD760CFP
- ★ DWHD760CFM
- ★ DWHD760CPR
- ★ DWHD560CFP
- ★ DWHD560CFM
- ★ DWHD560CPR

Built-In Coffee Machines

- ★ TCM24PS
- ★ TCM24TS

★ *Features Thermador Home Connect®*

The MASTERPIECE® *COLLECTION*

Sleek. Elegant. Modern.

The PROFESSIONAL *COLLECTION*

Bold Design. Standout Performance.

Home Connect

THE INTUITIVE HOME

Connect Every Thermador Smart Appliance With One App

Discover the power of seamless connectivity throughout your entire home. Stay connected in and out of the kitchen, with an ecosystem of smart home devices and services.

Download Today:

Download on the App Store | GET IT ON Google Play

Works With

just ask alexa | works with Google Home | fitbit | Apple Watch | ckbk | Wear OS by Google | innit | SIDECHEF | CRESTRON | IFTTT | kitchen stories ANYONE CAN COOK | LaMetric

Thermador Exclusive

Wherever you are, use your Apple Watch or Wear OS by Google™ to keep tabs on appliance functionality for a more connected, integrated lifestyle.

Thermador Exclusive

Introducing the all-new Pro Harmony® Liberty® Induction Range combining our unparalleled induction features with the power and performance of a Convection Oven.

RANGES

FOR THE PROFESSIONAL COLLECTION

Our Pro Grand® and Pro Harmony® Range collection offers a variety of sizes and styles, and is engineered to suit both large and compact kitchens.

PRO HARMONY® LIBERTY® INDUCTION RANGE

Professional
36-INCH – PRI36LBHU

PRO HARMONY®

Home Connect*

24-Inch Standard-Depth Professional Ranges

48-Inch, Dual-Fuel with Convection Oven

6 Burners and Griddle

- Electric Griddle
- 6 Patented Pedestal Star® Burners (2 with ExtraLow®)
- Convection Oven (Lg. Only)

48-Inch – PRD486WDHU

36-Inch, Dual-Fuel with Convection Oven

4 Burners and Griddle

- Electric Griddle
- 4 Patented Pedestal Star® Burners (2 with ExtraLow®)
- Convection Oven

36-Inch – PRD364WDHU

6 Burners

- 6 Patented Pedestal Star® Burners (2 with ExtraLow®)
- Convection Oven

36-Inch – PRD366WHU

30-Inch, Dual-Fuel with Convection Oven

★ *5 Burners*

5 BURNERS 30-Inch DESIGN

- 5 Patented Pedestal Star® Burners (2 with ExtraLow®)
- 18k, 15k, 10k and Two 8k BTU Burners
- Convection Oven

30-Inch – PRD305WHU

4 Burners

- 4 Patented Pedestal Star® Burners (2 with ExtraLow®)
- Two 18k and Two 15k BTU Burners
- Convection Oven

30-Inch – PRD304WHU

*Home Connect® not available on 30" Pro Harmony models

36-Inch, Induction with Convection Oven

Induction

- 3 Extra-Large Flexible Cooking Zones
- Convection Oven

36-Inch – PRI36LBHU

30-Inch, Induction with Convection Oven

Induction

- 2 Extra-Large Flexible Cooking Zones
- Convection Oven

30-Inch – PRI30LBHU

★ ***Thermador® Exclusive***

See pages 18–21 for accessories
Visit Thermador.com for complete specifications or text a Thermador model number to 21432 to have specs sent to your phone

PRO HARMONY®

Home Connect*

24-Inch Standard-Depth Professional Ranges

48-Inch, Gas with Convection Oven

6 Burners and Griddle

- Electric Griddle
- 6 Patented Pedestal Star® Burners (2 with ExtraLow®)
- Convection Oven (Lg. Only)

48-Inch – PRG486WDH

36-Inch, Gas with Convection Oven

4 Burners and Griddle

- Electric Griddle
- 4 Patented Pedestal Star® Burners (2 with ExtraLow®)
- Convection Oven

36-Inch – PRG364WDH

6 Burners

- 6 Patented Pedestal Star® Burners (2 with ExtraLow®)
- Convection Oven

36-Inch – PRG366WH

Blue Knob Kit

Accessorize any Pro Harmony® Range with a Signature Thermador Blue Knob Kit.

See pages 18–21

30-Inch, Gas with Convection Oven

★ *5 Burners*

5 BURNERS 30-Inch DESIGN

- 5 Patented Pedestal Star® Burners (2 with ExtraLow®)
- 18k, 15k, 10k and Two 8k BTU Burners
- Convection Oven

30-Inch – PRG305WH

4 Burners

- 4 Patented Pedestal Star® Burners (2 with ExtraLow®)
- Two 18k and Two 15k BTU Burners
- Convection Oven

30-Inch – PRG304WH

*Home Connect® not available on 30" Pro Harmony models

★ ***Thermador® Exclusive***

See pages 18–21 for accessories
Visit Thermador.com for complete specifications or text a Thermador model number to 21432 to have specs sent to your phone

PRO GRAND®

Home Connect

27-Inch Commercial-Depth Professional Ranges

60-Inch, Dual-Fuel with Convection & Steam Oven and Warming Drawer

6 Burners and Double Griddle

- 24" Double Griddle
- 6 Patented Pedestal Star® Burners (4 with ExtraLow®)
- Convection Oven (Lg.), Steam and Convection Oven (Sm.) and Warming Drawer

60-Inch – PRD606WESG

60-Inch, Dual-Fuel with Convection Oven

6 Burners and Double Griddle

- 24" Double Griddle
- Convection Oven (Both)
- 6 Patented Pedestal Star® Burners (4 with ExtraLow®)

60-Inch – PRD606WEG

48-Inch, Dual-Fuel with Convection & Steam Oven and Warming Drawer

6 Burners and Induction

- Multi-Zone Liberty® Induction Module
- 6 Patented Pedestal Star® Burners (4 with ExtraLow®)
- Convection Oven (Lg.), Steam and Convection Oven (Sm.) and Warming Drawer

48-Inch – PRD48WISGU

6 Burners and Griddle

- 12" Electric Griddle
- 6 Patented Pedestal Star® Burners (4 with ExtraLow®)
- Convection Oven (Lg.), Steam and Convection Oven (Sm.) and Warming Drawer

48-Inch – PRD48WDSGU

= *Steam Oven*

See pages 33–36 for accessories
Visit Thermador.com for complete specifications or text a Thermador model number to 21432 to have specs sent to your phone

PRO GRAND®

Home Connect

27-Inch Commercial-Depth Professional Ranges

48-Inch, Dual-Fuel with Convection Oven

6 Burners and Induction

- Multi-Zone Liberty® Induction Module
- 6 Patented Pedestal Star® Burners (4 with ExtraLow®)
- Convection Oven (Both)

48-Inch – PRD486WIGU

6 Burners and Griddle

- Electric Griddle
- 6 Patented Pedestal Star® Burners (4 with ExtraLow®)
- Convection Oven (Both)

48-Inch – PRD486WDGU

48-Inch, Gas with Convection Oven

6 Burners and Griddle

- Electric Griddle
- 6 Patented Pedestal Star® Burners (4 with ExtraLow®)
- Convection Oven (Both)

48-Inch – PRG486WDG

Blue Knob Kit

Accessorize any Pro Grand® Range with a Signature Thermador Blue Knob Kit.

See pages 33–36

36-Inch, Dual-Fuel with Convection Oven

4 Burners and Induction

- Multi-Zone Liberty® Induction Module
- 4 Patented Pedestal Star® Burners (4 with ExtraLow®)
- Convection Oven

36-Inch – PRD364WIGU

4 Burners and Griddle

- Electric Griddle
- 4 Patented Pedestal Star® Burners (4 with ExtraLow®)
- Convection Oven

36-Inch – PRD364WDGU

6 Burners

- 6 Patented Pedestal Star® Burners (4 with ExtraLow®)
- Convection Oven

36-Inch – PRD366WGU

36-Inch, Gas with Convection Oven

4 Burners and Griddle

- Electric Griddle
- 4 Patented Pedestal Star® Burners (4 with ExtraLow®)
- Convection Oven

36-Inch – PRG364WDG

6 Burners

- 6 Patented Pedestal Star® Burners (4 with ExtraLow®)
- Convection Oven

36-Inch – PRG366WG

See pages 33–36 for accessories
Visit Thermador.com for complete specifications or text a Thermador model number to 21432 to have specs sent to your phone

PRO HARMONY® QUICK REFERENCE CHART

24-Inch Standard-Depth, Professional

	48-Inch Professional	
	PRD486WDHU	PRG486WDH
Key Features		
Truly Flush Mounted (24-Inch Deep)	Yes	Yes
Fuel Type	Dual-Fuel	Gas
Cooktop Configuration	6 Burners + Griddle	6 Burners + Griddle
Electric Griddle	Yes	Yes
Number of Ovens	2	2
Thermador® Connected Experience by Home Connect® (Wi-Fi Enabled)	Yes (Lg. Oven Only)	Yes (Lg. Oven Only)
Burner Performance		
Burner Style	Patented Pedestal Star® Burner	Patented Pedestal Star® Burner
QuickClean Base®	Yes	Yes
ExtraLow® Simmer Burners	2	2
General / Oven Properties		
Color TFT Touch Screen Interface	Yes	Yes
Oven Capacity Lg. / Sm.	4.4 / 2.4 cu. ft.	4.6 / 2.5 cu. ft.
Convection Oven Lg. / Sm.	Yes / No	Yes / No
Telescopic Rack(s) Lg. / Sm.	3 / 1	3 / 1
Self-Clean Lg. / Sm.	Yes / Yes	No / No
Star-K Certified	Yes	Yes
Dimensions		
Overall Appliance Dimensions (HxWxD) (in)	35 3/4"–36 3/4" x 47 15/16" x 24 3/4"	35 3/4"–36 3/4" x 47 15/16" x 24 3/4"
Required Cutout Size (HxWxD) (in)	35 3/4"–36 3/4" x 48" x 24"	35 3/4"–36 3/4" x 48" x 24"

Visit Thermador.com for complete specifications or text a Thermador model number to 21432 to have specs sent to your phone

PRO HARMONY® QUICK REFERENCE CHART

24-Inch Standard-Depth, Professional

	36-Inch Professional			
	PRD364WDHU	PRD366WHU	PRG364WDH	PRG366WH
Key Features				
Truly Flush Mounted (24-Inch Deep)	Yes	Yes	Yes	Yes
Fuel Type	Dual-Fuel	Dual-Fuel	Gas	Gas
Cooktop Configuration	4 Burners + Griddle	6 Burners	4 Burners + Griddle	6 Burners
Electric Griddle	Yes	No	Yes	No
Number of Ovens	1	1	1	1
Thermador® Connected Experience by Home Connect® (Wi-Fi Enabled)	Yes	Yes	Yes	Yes
Burner Performance				
Burner Style	Patented Pedestal Star® Burner	Patented Pedestal Star® Burner	Patented Pedestal Star® Burner	Patented Pedestal Star® Burner
QuickClean Base®	Yes	Yes	Yes	Yes
ExtraLow® Simmer Burners	2	2	2	2
General / Oven Properties				
Color TFT Touch Screen Interface	Yes	Yes	Yes	Yes
Oven Capacity	4.9 cu. ft.	4.9 cu. ft.	5.1 cu. ft.	5.1 cu. ft.
Convection Oven	Yes	Yes	Yes	Yes
Telescopic Rack(s)	3	3	3	3
Self-Clean	Yes	Yes	No	No
Star-K Certified	Yes	Yes	Yes	Yes
Dimensions				
Overall Appliance Dimensions (HxWxD) (in)	35 3/4"– 36 3/4" x 35 15/16" x 24 3/4"	35 3/4"– 36 3/4" x 35 15/16" x 24 3/4"	35 3/4"– 36 3/4" x 35 15/16" x 24 3/4"	35 3/4"– 36 3/4" x 35 15/16" x 24 3/4"
Required Cutout Size (HxWxD) (in)	35 3/4"– 36 3/4" x 36" x 24"	35 3/4"– 36 3/4" x 36" x 24"	35 3/4"– 36 3/4" x 36" x 24"	35 3/4"– 36 3/4" x 36" x 24"

Visit Thermador.com for complete specifications or text a Thermador model number to 21432 to have specs sent to your phone

PRO HARMONY® QUICK REFERENCE CHART

24-Inch Standard-Depth, Professional

	30-Inch Professional			
	PRD305WHU	PRD304WHU	PRG305WH	PRG304WH
Key Features				
Truly Flush Mounted (24-Inch Deep)	Yes	Yes	Yes	Yes
Fuel Type	Dual-Fuel	Dual-Fuel	Gas	Gas
Cooktop Configuration	5 Burners	4 Burners	5 Burners	4 Burners
Electric Griddle	No	No	No	No
Number of Ovens	1	1	1	1
Thermador® Connected Experience by Home Connect® (Wi-Fi Enabled)	No	No	No	No
Burner Performance				
Burner Style	Patented Pedestal Star® Burner	Patented Pedestal Star® Burner	Patented Pedestal Star® Burner	Patented Pedestal Star® Burner
QuickClean Base®	Yes	Yes	Yes	Yes
ExtraLow® Simmer Burners	2	2	2	2
General / Oven Properties				
Color TFT Touch Screen Interface	No	No	No	No
Oven Capacity	4.4 cu. ft.	4.4 cu. ft.	4.6 cu. ft.	4.6 cu. ft.
Convection Oven	Yes	Yes	Yes	Yes
Telescopic Rack(s)	1	1	1	1
Self-Clean	Yes	Yes	No	No
Star-K Certified	Yes	Yes	Yes	Yes
Dimensions				
Overall Appliance Dimensions (HxWxD) (in)	35 3/4"– 36 3/4" x 29 15/16" x 24 3/4"	35 3/4"– 36 3/4" x 29 15/16" x 24 3/4"	35 3/4"– 36 3/4" x 29 15/16" x 24 3/4"	35 3/4"– 36 3/4" x 29 15/16" x 24 3/4"
Required Cutout Size (HxWxD) (in)	35 3/4"–36 3/4" x 30" x 24"	35 3/4"–36 3/4" x 30" x 24"	35 3/4"–36 3/4" x 30" x 24"	35 3/4"–36 3/4" x 30" x 24"

Visit Thermador.com for complete specifications or text a Thermador model number to 21432 to have specs sent to your phone

PRO HARMONY® QUICK REFERENCE CHART

24-Inch Standard-Depth, Professional

	36-Inch & 30-Inch Professional, Induction	
	PRI36LBHU	PRI30LBHU
Key Features		
Truly Flush Mounted (24-Inch Deep)	Yes	Yes
Energy Source	Electric	Electric
Surface Type	Induction	Induction
Cooking Zones	3 Extra-Large Zones (5 Induction Elements)	2 Extra-Large Zones with FlexPlus™ (4 Induction Elements)
Frameless Black Glass Cooktop	Yes	Yes
Number of Ovens	1	1
Thermador® Connected Experience by Home Connect® (Wi-Fi Enabled)	Yes	Yes
Element Performance		
PowerBoost®	Yes	Yes
HeatShift®	Yes	Yes
MoveMode®	Yes	Yes
Element Size		
Dimension of Front Left Heating Element	8 1/2" x 7 1/2"	8 1/2" x 7 1/2"
Dimension of Back Left Heating Element	8 1/2" x 7 1/2"	8 1/2" x 7 1/2"
Dimension of Center Heating Element	9 1/2" x 11"	—
Dimension of Front Right Heating Element	8 1/2" x 7 1/2"	8 1/2" x 7 1/2"
Dimension of Back Right Heating Element	8 1/2" x 7 1/2"	8 1/2" x 7 1/2"
Dimension of FlexPlus™ Left Heating Element	—	3 1/2" x 11 1/4"
Dimension of FlexPlus™ Right Heating Element	—	3 1/2" x 11 1/4"
General / Oven Properties		
Color TFT Touch Screen Interface	Yes	Yes
Oven Capacity	4.9 cu. ft.	4.4 cu. ft.
Convection Oven	Yes	Yes
Telescopic Racks	3	1
Standard Racks	—	2
Self-Clean	Yes	Yes
Star-K Certified	—	—
Dimensions		
Overall Appliance Dimensions (HxWxD) (in)	35 3/4" – 36 3/4" x 35 15/16" x 24 3/4"	35 3/4" – 36 3/4" x 29 15/16" x 24 3/4"
Required Cutout Size (HxWxD) (in)	35 3/4" – 36 3/4" x 36" x 24"	35 3/4" – 36 3/4" x 30" x 24"

Visit Thermador.com for complete specifications or text a Thermador model number to 21432 to have specs sent to your phone

PRO HARMONY® OPTIONAL ACCESSORIES

24-Inch Standard-Depth, Professional

	48-Inch, Dual-Fuel	*48-Inch, Gas*
	PRD486WDHU	PRG486WDH
PWOKRINGHC – Wok Ring	✓	✓
PA12CHPBLK – Chopping Block / Cutting Board	✓	✓
PAGRIDDLE – Professional Griddle, Sits on Top of Grates Over 2 Star Burners, High-Release Coating	✓	✓
PA12GRILLW – 12" Pro Grill Plate with Tray, (for Griddle Models), Non-Fusion Coating	✓	✓
PAGRIDLFW – 12" Pro Griddle with Tray, (Fusion Coating Option for Griddle Models)	✓	✓
PA12GRILFW – 12" Grill Plate with Tray (for Griddle Models), Fusion Coating	✓	✓
PA12LCVRW – 12" Professional Griddle Cover	✓	✓
PA48WLBH – Pro Harmony 7" Low Backguard*	✓	✓
PARKB48CHY – Blue Knob Kit	✓	
PARKB48DHY – Blue Knob Kit		✓
PALPKITHW – LP Conversion Kit, Pro Harmony Dual Fuel Models with 4 and 6 Burners	✓	
PALPKITGA6 – LP Conversion Kit, Pro Harmony Gas Models with 6 Burners + Griddle		✓
PAALTKITH – High Altitude Kit, Natural Gas or Dual-Fuel Pro Harmony Ranges, 5,400 ft. to 10,200 ft.	✓	✓
Contact Customer Support – High Altitude Kit, Gas or Dual-Fuel Pro Harmony Ranges Connected to LP Gas, 10,000 ft. to 10,200 ft.	✓	✓

*Models PCG305xx, PRD305xx, PRD606xx, PRG305xx, PRG304xx and PRD304xx are suitable for 0" rear clearance to combustible surfaces. All other models: when using the included Island Trim a minimum 6" (152 mm) rear clearance is required to a combustible surface. When installing against a combustible surface, a Thermador® Low Backguard is required for a 0" rear clearance to the combustible surface. A Thermador Low Backguard must be purchased separately. A rear clearance to a surface covered in a noncombustible material (metal, ceramic tile, brick, marble, or stone) is 0" when using the included Island Trim. Clearances of less than 6" (152 mm) should be approved by the local codes and/or by the local authority having jurisdiction. Clearances from non-combustible materials are not part of the ANSI Z21.1 scope and are not certified by CSA.

Visit Thermador.com for complete specifications or text a Thermador model number to 21432 to have specs sent to your phone

PRO HARMONY® OPTIONAL ACCESSORIES

24-Inch Standard-Depth, Professional

	36-Inch, Dual-Fuel		*36-Inch, Gas*	
	PRD364WDHU	PRD366WHU	PRG364WDH	PRG366WH
PWOKRINGHC – Wok Ring	✓	✓	✓	✓
PA12CHPBLK – Chopping Block / Cutting Board	✓	✓	✓	✓
PAGRIDDLE – Professional Griddle, Sits on Top of Grates Over 2 Star Burners, High-Release Coating	✓	✓	✓	✓
PA12GRILLW – 12" Pro Grill Plate with Tray, (for Griddle Models), Non-Fusion Coating	✓		✓	
PAGRIDLFW – 12" Pro Griddle with Tray, (Fusion Coating Option for Griddle Models)	✓		✓	
PA12GRILFW – 12" Grill Plate with Tray (for Griddle Models), Fusion Coating	✓		✓	
PA12LCVRW – 12" Professional Griddle Cover	✓		✓	
PA36WLBH – Pro Harmony 7" Low Backguard*	✓	✓	✓	✓
PARKB36DHY – Blue Knob Kit	✓		✓	
PARKB36HY – Blue Knob Kit		✓		
PARKB3XHY – Blue Knob Kit				✓
PALPKITHW – LP Conversion Kit, Pro Harmony Dual Fuel Models with 4 and 6 Burners	✓	✓		
PALPKITGA – LP Conversion Kit, Pro Harmony Gas Models with 4 and 6 Burners			✓	✓
PAALTKITH – High Altitude Kit, Natural Gas or Dual-Fuel Pro Harmony Ranges, 5,400 ft. to 10,200 ft.	✓	✓	✓	✓
Contact Customer Support – High Altitude Kit, Gas or Dual-Fuel Pro Harmony Ranges Connected to LP Gas, 10,000 ft. to 10,200 ft.	✓	✓	✓	✓

*Models PCG305xx, PRD305xx, PRD606xx, PRG305xx, PRG304xx and PRD304xx are suitable for 0" rear clearance to combustible surfaces. All other models: when using the included Island Trim a minimum 6" (152 mm) rear clearance is required to a combustible surface. When installing against a combustible surface, a Thermador® Low Backguard is required for a 0" rear clearance to the combustible surface. A Thermador Low Backguard must be purchased separately. A rear clearance to a surface covered in a noncombustible material (metal, ceramic tile, brick, marble, or stone) is 0" when using the included Island Trim. Clearances of less than 6" (152 mm) should be approved by the local codes and/or by the local authority having jurisdiction. Clearances from non-combustible materials are not part of the ANSI Z21.1 scope and are not certified by CSA.

Visit Thermador.com for complete specifications or text a Thermador model number to 21432 to have specs sent to your phone

PRO HARMONY® OPTIONAL ACCESSORIES

24-Inch Standard-Depth, Professional

	30-Inch, Dual-Fuel		30-Inch, Gas	
	PRD305WHU	PRD304WHU	PRG305WH	PRG304WH
PWOKRINGHC – Wok Ring	✓	✓	✓	✓
PA12CHPBLK – Chopping Block / Cutting Board	✓	✓	✓	✓
PAGRIDDLE – Professional Griddle, Sits on Top of Grates Over 2 Star Burners, High-Release Coating	✓	✓	✓	✓
PA30WLBH – Pro Harmony 7" Low Backguard*	✓	✓	✓	✓
PARKB30HY – Blue Knob Kit	✓	✓		
PARKB3XHY – Blue Knob Kit			✓	✓
PALPKITHW – LP Conversion Kit, Pro Harmony Dual Fuel Models with 4 and 6 Burners		✓		
PALPKITHW5 – LP Conversion Kit, Pro Harmony Dual-Fuel Model PRD305WH Only (5 Burners)	✓			
PALPKITGA – LP Conversion Kit, Pro Harmony Gas Models with 4 and 6 Burners				✓
PALPKITHA5 – LP Conversion Kit, Pro Harmony Gas Model PRG305WH only (5 Burners)			✓	
PAALTKITH – High Altitude Kit, Natural Gas or Dual-Fuel Pro Harmony Ranges, 5,400 ft. to 10,200 ft.	✓	✓	✓	✓
Contact Customer Support – High Altitude Kit, Gas or Dual-Fuel Pro Harmony Ranges Connected to LP Gas, 10,000 ft. to 10,200 ft.	✓	✓	✓	✓

*Models PCG305xx, PRD305xx, PRD606xx, PRG305xx, PRG304xx and PRD304xx are suitable for 0" rear clearance to combustible surfaces. All other models: when using the included Island Trim a minimum 6" (152 mm) rear clearance is required to a combustible surface. When installing against a combustible surface, a Thermador® Low Backguard is required for a 0" rear clearance to the combustible surface. A Thermador Low Backguard must be purchased separately. A rear clearance to a surface covered in a noncombustible material (metal, ceramic tile, brick, marble, or stone) is 0" when using the included Island Trim. Clearances of less than 6" (152 mm) should be approved by the local codes and/or by the local authority having jurisdiction. Clearances from non-combustible materials are not part of the ANSI Z21.1 scope and are not certified by CSA.

Visit Thermador.com for complete specifications or text a Thermador model number to 21432 to have specs sent to your phone

PRO HARMONY® OPTIONAL ACCESSORIES

24-Inch Standard-Depth, Professional

	36-Inch, Induction	30-Inch, Induction
	PRI36LBHU	PRI30LBHU
CHEFSPAN08 – 10" Stainless Steel Pan	✓	✓
TROASTERT – 10" x 16" Stainless Steel Roaster Pan	✓	✓
TEPPAN1016 – 10" x 16" Griddle Style Teppanyaki	✓	✓
TEPPAN1013 – 10" x 13" Teppanyaki	✓	✓
TGRILLPANX – 9" x 17" Non-Stick Induction Grill	✓	✓
PARKB3XIHB – Blue Knob Kit	✓	✓

*Models PCG305xx, PRD305xx, PRD606xx, PRG305xx, PRG304xx and PRD304xx are suitable for 0" rear clearance to combustible surfaces. All other models: when using the included Island Trim a minimum 6" (152 mm) rear clearance is required to a combustible surface. When installing against a combustible surface, a Thermador® Low Backguard is required for a 0" rear clearance to the combustible surface. A Thermador Low Backguard must be purchased separately. A rear clearance to a surface covered in a noncombustible material (metal, ceramic tile, brick, marble, or stone) is 0" when using the included Island Trim. Clearances of less than 6" (152 mm) should be approved by the local codes and/or by the local authority having jurisdiction. Clearances from non-combustible materials are not part of the ANSI Z21.1 scope and are not certified by CSA.

Visit Thermador.com for complete specifications or text a Thermador model number to 21432 to have specs sent to your phone

PRO HARMONY® PLANNING INFORMATION

Professional Ranges

Model Options

There are three sizes of Thermador Pro Harmony Ranges to choose from — 48-inch, 36-inch and 30-inch. Models are available in your choice of all-gas, dual-fuel or induction/electric configurations. Pro Harmony Ranges feature a compact, 24-inch deep design in stainless steel with a porcelain cooktop surface. Ranges are LP convertible by ordering the specified kit. Be sure to reference the correct model information in this design guide.

Installation Considerations

The information in this design guide provides key features, product dimensions, cutouts and installation specifications. Before installing a Thermador Pro Harmony Range, be sure to verify the cutout dimensions and electrical / gas connections. Installation instructions are subject to change. Always consult with the installation manual included with the product for complete details prior to the installation.

Installation Options

Thermador Pro Harmony® Ranges feature a bold, professional design and a compact, 24-inch depth profile that creates a seamless look within standard cabinetry. These ranges can be installed in a wall or island installation.

Ventilation Requirements

We strongly recommend that a Thermador Professional® Wall or Island Hood or Custom Insert be installed with all Thermador Pro Harmony Ranges. Reference the selection guide in the ventilation section for compatible Thermador hoods. Downdraft ventilation should not be used. Do not install a microwave-hood combination above the cooktop, as these types of units do not provide the proper ventilation and are not suitable for use with Thermador Pro Harmony Ranges.

Important Ventilation Notes:

- For wall installations, the hood width must, at a minimum, equal the nominal width of the appliance cooking surface. Where space permits, a hood larger in width than the cooking surface may be desirable for improved ventilation performance.
- For island installations, the hood width should, at a minimum, overhang the appliance cooking surface by 3" on each side.
- Due to the high heat capability of these ranges, particular attention should be paid to the hood and duct work installation to assure it meets local building codes.
- For best smoke elimination, the lower edge of the hood should be installed 30"–36" above the appliance cooking surface.
- If the hood contains any combustible materials (i.e., a wood covering), it must be 36" or greater distance above the cooking surface.

Electrical and Gas Specifications

Be sure your appliance is properly installed and grounded by a qualified technician. Installation, electrical and gas connections, and grounding must comply with all applicable local codes.

Natural Gas or LP

Thermador Dual-Fuel Pro Harmony Ranges are shipped by the factory to operate on natural gas. They must be converted for use with propane. Verify that the type of gas being used at the installation site matches the type of gas used by the appliance. If the location / job site requires conversion from natural gas to propane (LP), an LP gas conversion kit must be purchased separately. Field conversion must be done by qualified service personnel only. Please refer to the LP Conversion Instructions packed with product for further information.

A manual gas shut-off valve must be installed external to the appliance, in a location accessible from the front, for the purpose of shutting off the gas supply. The supply line must not interfere with the back of the unit.

Natural Gas Requirements:

- Inlet Connection: 3/4" NPT external, 1/2" NPT internal (Minimum 3/4" diam. flex line.)
- Supply Pressure: 6" min. to 14" max. water column. (14.9 mb to 34.9 mb)
- Manifold Pressure: 5" water column (12.5 mb)

Propane Gas Requirements:

- Inlet Connection: 3/4" NPT external, 1/2" NPT internal (Minimum 3/4" diam. flex line.)
- Supply Pressure: 11" min. to 14" max. water column. (27.4 mb to 34.9 mb)
- Manifold Pressure: 10" water column (24.9 mb)

High Altitude:

High altitude kits are available for Thermador Pro Harmony Ranges. Reference the Accessory chart or Contact Customer Support for details.

PRO HARMONY® PLANNING INFORMATION

Professional Ranges

Dual-Fuel:

Thermador Pro Harmony Dual-Fuel Ranges are dual rated, designed to be connected to either 240 / 208V AC, 60 Hz, 4-wire, single-phase power supply. The connection may be made with a range supply cord kit (purchased separately) or by hard-wiring to the power supply. A dedicated circuit breaker is required.

Model	*Required Circuit Breaker*
	240 / 208V AC, 60 Hz
PRD486WDHU	50 A
PRD364WDHU	30 A
PRD366WHU	30 A
PRD305WHU	30 A
PRD304WHU	30 A

All-Gas:

Thermador Pro Harmony All-Gas Ranges are equipped with a 3-wire plug and are designed to be connected to a 120V AC, 60 Hz, single-phase power supply. A dedicated circuit breaker is required.

Model	*Required Circuit Breaker*
	120V AC, 60 Hz
PRG486WDH	20 A
PRG364WDH	20 A
PRG366WH	15 A
PRG305WH	15 A
PRG304WH	15 A

Induction:

Thermador Pro Harmony Induction Ranges are dual rated, designed to be connected to either 240 / 208V AC, 60 Hz, 4-wire, single-phase power supply. The connection may be made with a range supply cord kit (purchased separately) or by hard-wiring to the power supply. A dedicated circuit breaker is required.

Model	*Required Circuit Breaker*
	240 / 208V AC, 60 Hz
PRI36LBHU	50 A
PRI30LBHU	50 A

Electrical Supply

IMPORTANT: The cord supplied with gas ranges having an electric griddle requires a NEMA 5-20 receptacle as shown here. Local codes my require a different wiring method.

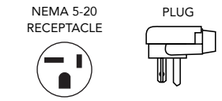

WARNING: This appliance is equipped with a three-prong grounding plug for protection against shock hazard and should be plugged directly into a properly grounded receptacle. DO NOT cut or remove the grounding prong from this plug. DO NOT ALTER THIS PLUG.

Electrical and Gas Locations

Typical placement of the electrical and gas supply can be found within the "Cutout and Range Dimensions" located on the installation pages. Alternate placement within the supply zone is acceptable. Dual-Fuel ranges may be connected to the power supply with a range supply cord kit (sold separately) or by hard-wiring to the power supply. All-gas ranges may be connected to the power supply with the supplied range cord or by hard-wiring. It is the responsibility of the installer to provide the proper wiring components (cord or conduit and wires) and complete the electrical connection as dictated by local codes and ordinances and/or the National Electric Code. The units must be properly grounded.

Installation of the range must be planned so that the rough-in of the junction box for the receptacle or conduit connection will allow maximum clearance to the rear of the unit.

Visit Thermador.com for complete specifications or text a Thermador model number to 21432 to have specs sent to your phone

PRO HARMONY® INSTALLATION

Professional Ranges

48-Inch Range Dimensions

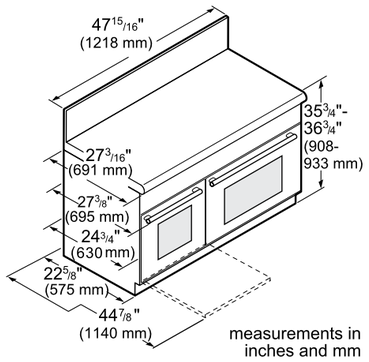

36-Inch Range Dimensions

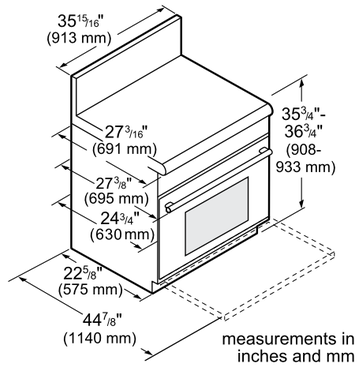

36-Inch Induction Range Dimensions

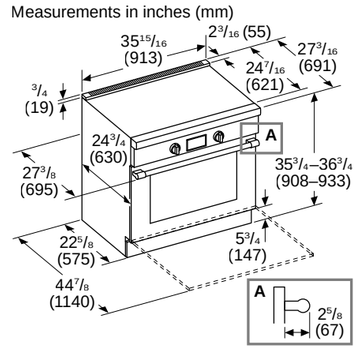

30-Inch Range Dimensions

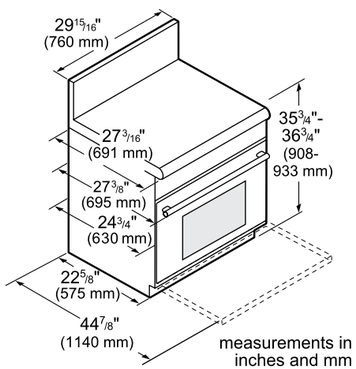

30-Inch Induction Range Dimensions

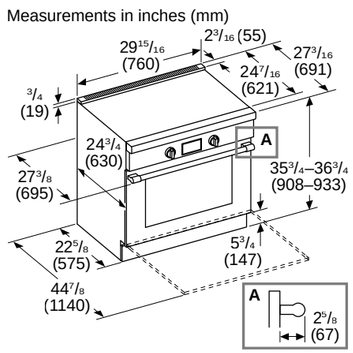

Range Cutout Dimensions

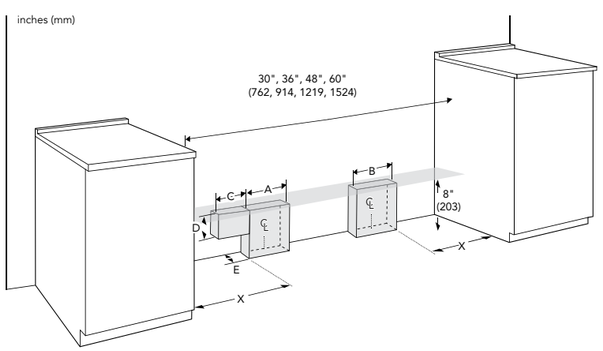

Range model	Gas zone A	Electric zone B	X	C	D	E
All Harmony series	4'' (102)	6'' (152)	5'' (127)	N/A	N/A	2'' (51)
36''/ 48'' Grand series	4'' (102)	6'' (152)	8'' (203)	4'' (102)	3'' (76)	2'' (51)
60'' Grand series	4'' (102)	6'' (152)	8'' (203)	4'' (102)	3'' (76)	1'' (25)

Visit Thermador.com for complete specifications or text a Thermador model number to 21432 to have specs sent to your phone

PRO HARMONY® INSTALLATION

Professional Ranges, All-Gas and Dual-Fuel

48-Inch, 36-Inch and 30-Inch Dimensions and Clearance Requirements With "Low Back"

NOTE: A 36-inch minimum clearance is required between the top of the cooking surface and the bottom of an unprotected cabinet. A 30-inch clearance can be used when the bottom of the wood or metal cabinet is protected by not less than 1/4 inch of a flame retardant material covered with not less than No. 28 MSG sheet steel, 0.015 inch (0.4 mm) thick stainless steel, 0.024 inch (0.6 mm) aluminum, or 0.020 inch (0.5 mm) thick copper.

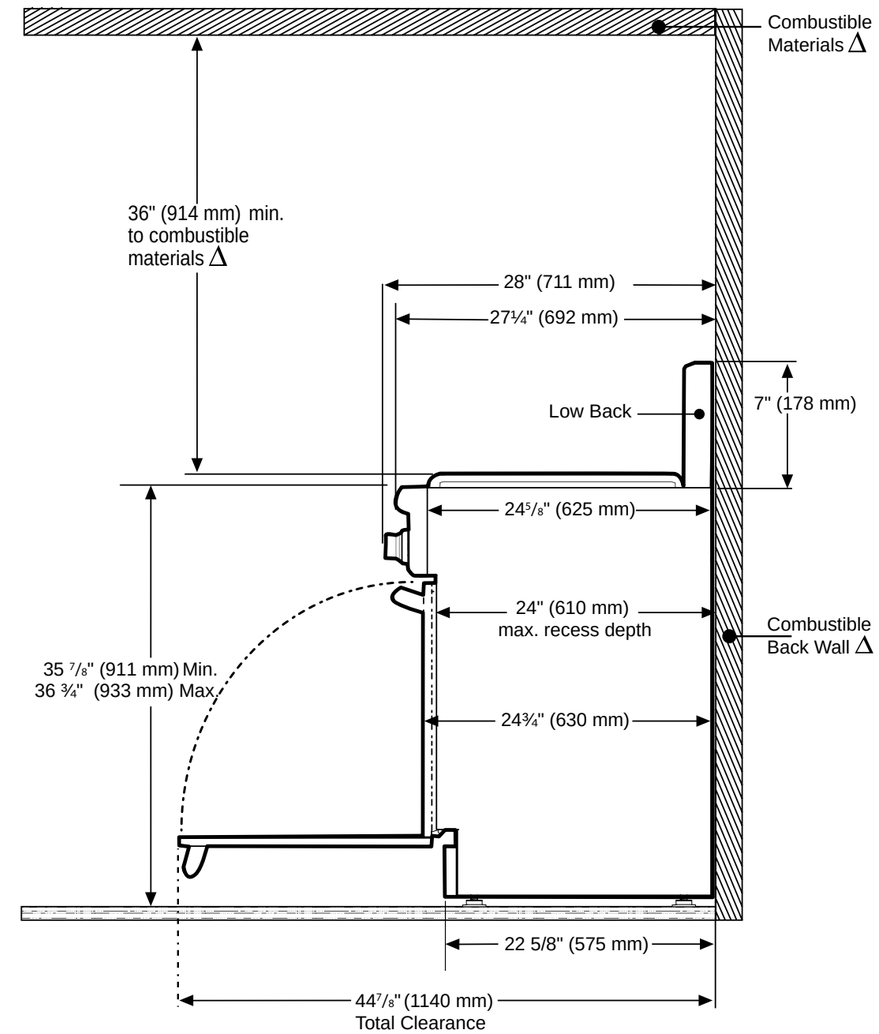

Δ As defined in the "National Fuel Gas Code" (ANSI Z223.1, Current Edition). Clearances from non-combustible materials are not part of the ANSI Z21.1 scope and are not certified by CSA.

48-Inch and 36-Inch: Clearances of less then 6" (152mm) must be approved by the local codes and/or by the local authority having jurisdiction.

Visit Thermador.com for complete specifications or text a Thermador model number to 21432 to have specs sent to your phone

48-Inch and 36-Inch Range Dimensions and Clearance Requirements With "Flush Island Trim"

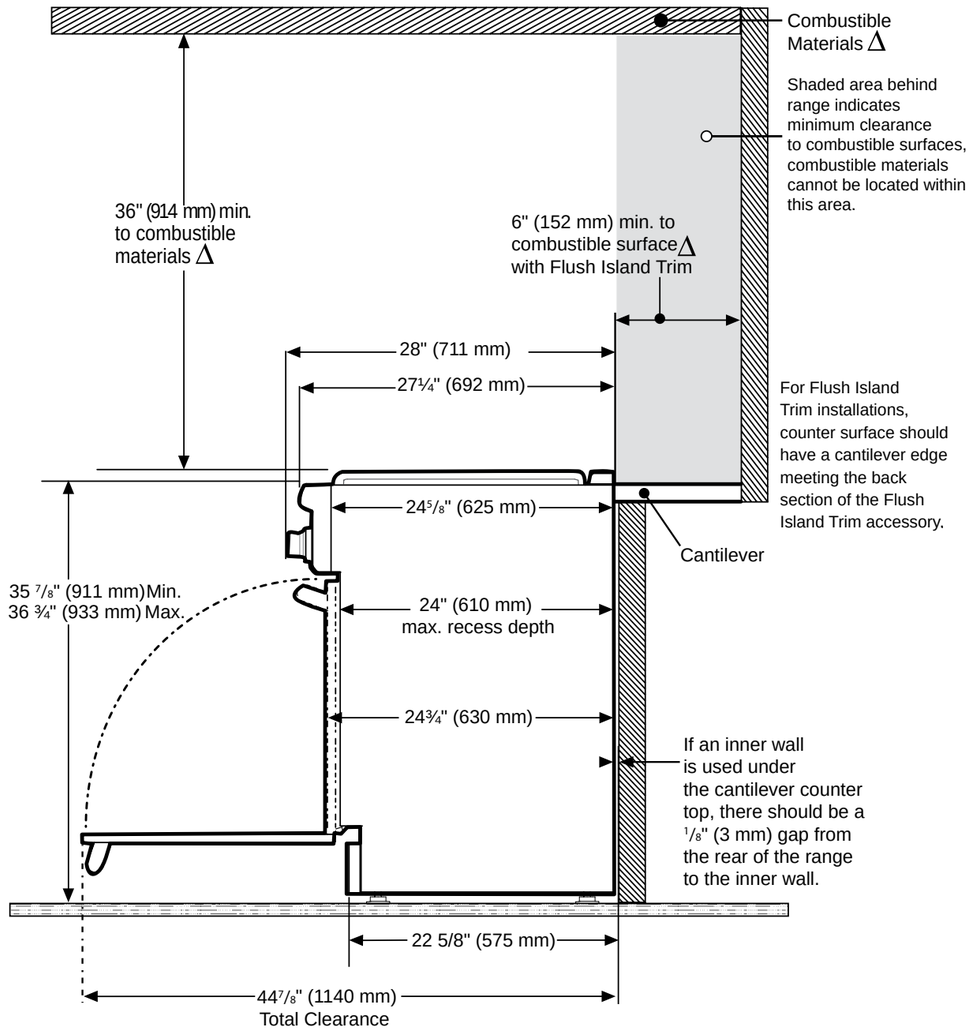

Δ As defined in the "National Fuel Gas Code" (ANSI Z223.1, Current Edition). Clearances from non-combustible materials are not part of the ANSI Z21.1 scope and are not certified by CSA. Clearances of less than 6" (152 mm) must be approved by the local codes and/or by the local authority having jurisdiction.

PRO HARMONY® INSTALLATION
Professional Ranges, All-Gas and Dual-Fuel

30-Inch Range Cabinet Clearances With Hood – 5 Burners

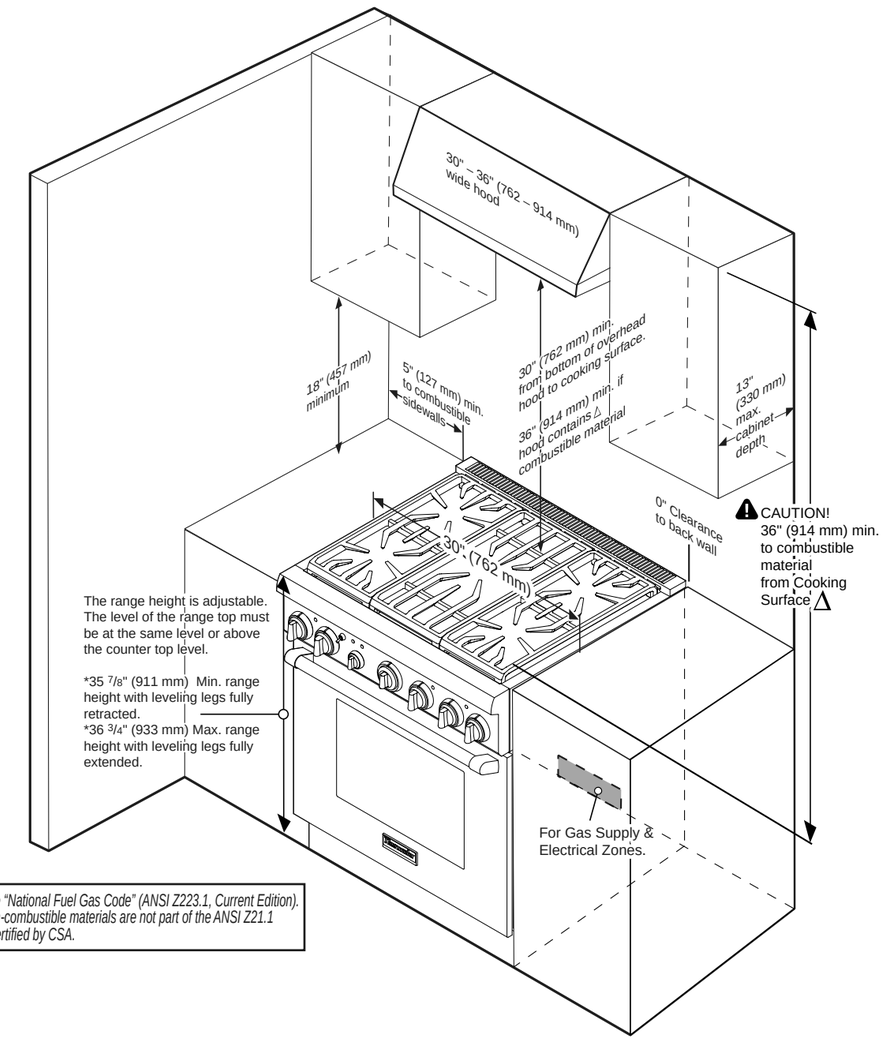

Δ as defined in the "National Fuel Gas Code" (ANSI Z223.1, Current Edition). Clearances from non-combustible materials are not part of the ANSI Z21.1 scope and are not certified by CSA.

PRO HARMONY® INSTALLATION

Professional Ranges, All-Gas and Dual-Fuel

30-Inch Range Cabinet Clearances With Over-The-Range Microwave – 5 Burners

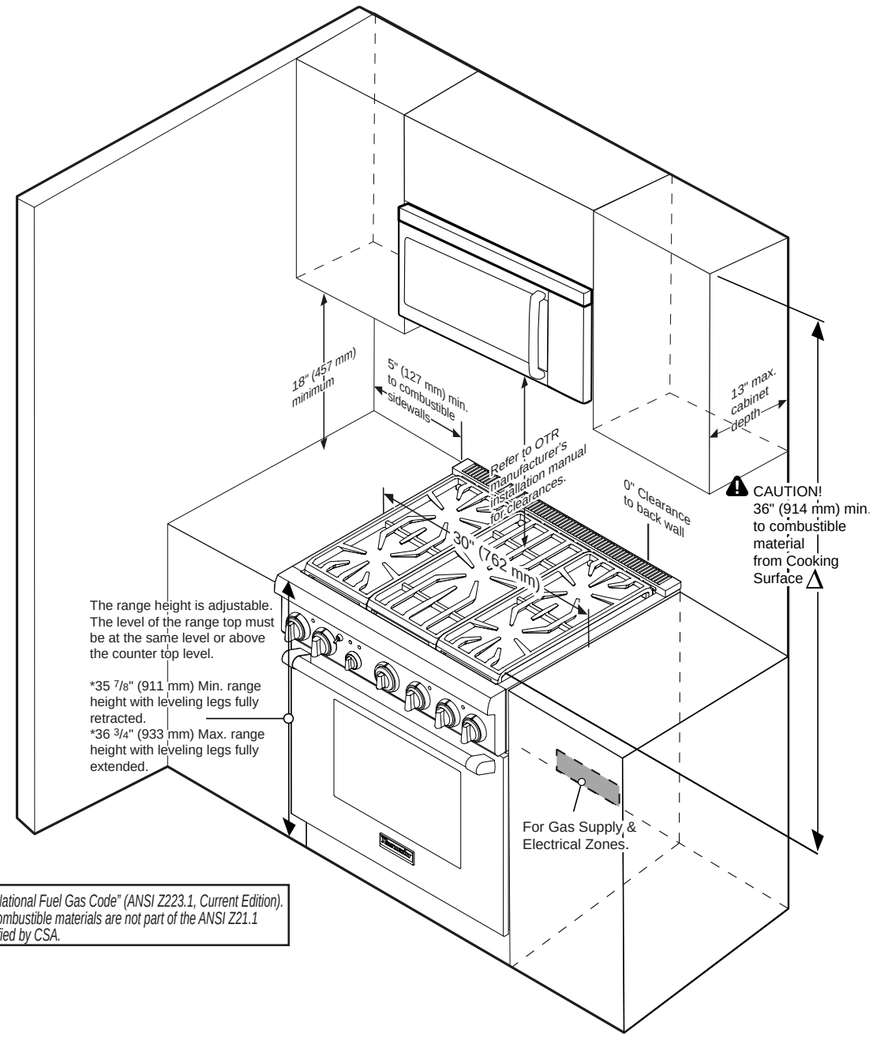

Δ as defined in the "National Fuel Gas Code" (ANSI Z223.1, Current Edition). Clearances from non-combustible materials are not part of the ANSI Z21.1 scope and are not certified by CSA.

PRO HARMONY® INSTALLATION

Professional Ranges

30-Inch Range Dimensions and Side Clearance Requirements – 4 and 5 Burners, and Induction

NOTE: A 36-inch minimum clearance is required between the top of the cooking surface and the bottom of an unprotected cabinet. A 30-inch clearance can be used when the bottom of the wood or metal cabinet is protected by not less than 1/4 inch of a flame retardant material covered with not less than No. 28 MSG sheet steel, 0.015 inch (0.4 mm) thick stainless steel, 0.024 inch (0.6 mm) aluminum, or 0.020 inch (0.5 mm) thick copper.

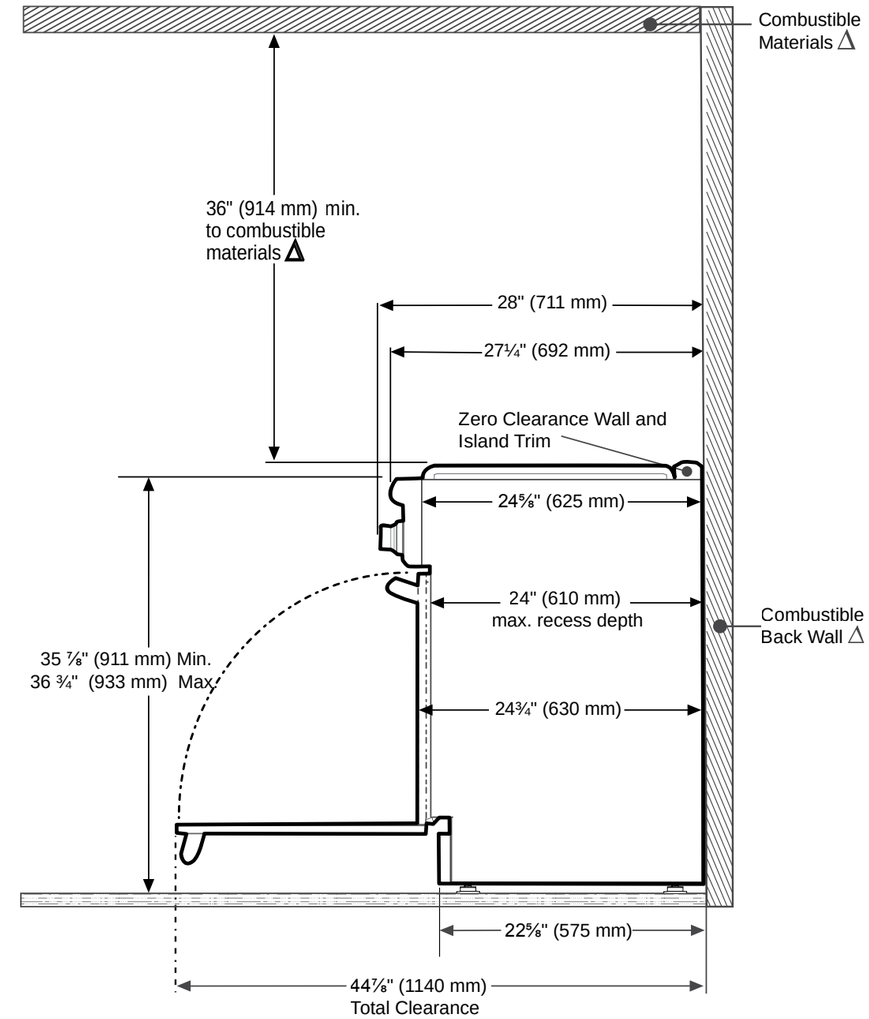

Δ as defined in the "National Fuel Gas Code" (ANSI Z223.1, Current Edition). Clearances from non-combustible materials are not part of the ANSI Z21.1 scope and are not certified by CSA.

PRO GRAND® QUICK REFERENCE CHART

27-Inch Commercial-Depth, Professional

	60-Inch Professional	
	PRD606WESG	PRD606WEG
Key Features		
Fuel Type	Dual-Fuel	Dual-Fuel
Cooktop Configuration	6 + Double Griddle	6 + Double Griddle
Electric Griddle	Yes, Double	Yes, Double
Liberty® Induction Module	No	No
Oven Configuration	Convection Oven (Lg.), Steam and Convection Oven (Sm.) and Warming Drawer	Lg. & Sm. Convection Oven
Thermador® Connected Experience by Home Connect® (Wi-Fi enabled)	Yes (Lg. Oven Only)	Yes (Lg. Oven Only)
Burner Performance		
Burner Style	Patented Pedestal Star® Burner	Patented Pedestal Star® Burner
QuickClean Base®	Yes	Yes
ExtraHigh Star® Burner (22,000 BTU)	1	1
ExtraLow® Simmer Burners	4	4
General / Oven Properties		
Color TFT Touch Screen Interface	Yes	Yes
Oven Capacity Lg. / Sm.	5.7 / 1.6 cu. ft.	5.7 / 4.9 cu. ft.
Convection Oven Lg. / Sm.	Yes / Yes	Yes / Yes
Telescopic Rack(s) Lg. / Sm.	3 / 0	3 / 3
Self-Clean Lg. / Sm.	Yes / Yes	Yes / Yes
SoftClose® Hinges	Yes	Yes
Star-K Certified	Yes	Yes
Dimensions		
Overall Appliance Dimensions (HxWxD) (in)	35 3/4"–36 3/4" x 59 15/16" x 27 7/8"	35 3/4"–36 3/4" x 59 15/16" x 27 7/8"
Required Cutout Size (HxWxD) (in)	35 3/4"–36 3/4" x 60" x 24"–25 1/8"	35 3/4"–36 3/4" x 60" x 24"–25 1/8"

= Steam Oven

Visit Thermador.com for complete specifications or text a Thermador model number to 21432 to have specs sent to your phone

PRO GRAND® QUICK REFERENCE CHART

27-Inch Commercial-Depth, Professional

	48-Inch Professional				
	PRD48WDSGU	PRD48WISGU	PRD486WDGU	PRD486WIGU	PRG486WDG
Key Features					
Fuel Type	Dual-Fuel	Dual-Fuel	Dual-Fuel	Dual-Fuel	Gas
Cooktop Configuration	6 + Griddle	6 + Induction	6 + Griddle	6 + Induction	6 + Griddle
Electric Griddle	Yes	No	Yes	No	Yes
Liberty® Induction Module	No	Yes	No	Yes	No
Oven Configuration	Convection Oven (Lg.), Steam and Convection Oven (Sm.) and Warming Drawer	Convection Oven (Lg.), Steam and Convection Oven (Sm.) and Warming Drawer	Lg. & Sm. Convection Oven	Lg. & Sm. Convection Oven	Lg. Convection Oven, Sm. Oven
Thermador® Connected Experience by Home Connect® (Wi-Fi enabled)	Yes (Lg. Oven Only)	Yes (Lg. Oven Only)	Yes (Lg. Oven Only)	Yes (Lg. Oven Only)	Yes (Lg. Oven Only)
Burner Performance					
Burner Style	Patented Pedestal Star® Burner	Patented Pedestal Star® Burner	Patented Pedestal Star® Burner	Patented Pedestal Star® Burner	Patented Pedestal Star® Burner
QuickClean Base®	Yes	Yes	Yes	Yes	Yes
ExtraHigh Star® Burner (22,000 BTU)	1	1	1	1	1
ExtraLow® Simmer Burners	4	4	4	4	4
General / Oven Properties					
Color TFT Touch Screen Interface	Yes	Yes	Yes	Yes	Yes
Oven Capacity Lg. / Sm.	4.9 / 1.6 cu. ft.	4.9 / 1.6 cu. ft.	5.7 / 2.5 cu. ft.	5.7 / 2.5 cu. ft.	5.7 / 2.5 cu. ft.
Convection Oven Lg. / Sm.	Yes / Yes	Yes / Yes	Yes / Yes	Yes / Yes	Yes / Yes
Telescopic Rack(s) Lg. / Sm.	3 / 0	3 / 0	3 / 2	3 / 2	3 / 2
Self-Clean Lg. / Sm.	Yes / Yes	Yes / Yes	Yes / Yes	Yes / Yes	Yes / Yes
SoftClose® Hinges	Yes	Yes	Yes	Yes	Yes
Star-K Certified	Yes	Yes	Yes	Yes	Yes
Dimensions					
Overall Appliance Dimensions (HxWxD) (in)	35 3/4"–36 3/4" x 47 15/16" x 27 7/8"	35 3/4"–36 3/4" x 47 15/16" x 27 7/8"	35 3/4"–36 3/4" x 47 15/16" x 27 7/8"	35 3/4"–36 3/4" x 47 15/16" x 27 7/8"	35 3/4"–36 3/4" x 47 15/16" x 27 7/8"
Required Cutout Size (HxWxD) (in)	35 3/4"–36 3/4" x 48" x 24"–25 1/8"	35 3/4"–36 3/4" x 48" x 24"–25 1/8"	35 3/4"–36 3/4" x 48" x 24"–25 1/8"	35 3/4"–36 3/4" x 48" x 24"–25 1/8"	35 3/4"–36 3/4" x 48" x 24"–25 1/8"

= Steam Oven

Visit Thermador.com for complete specifications or text a Thermador model number to 21432 to have specs sent to your phone

PRO GRAND® QUICK REFERENCE CHART

27-Inch Commercial-Depth, Professional

	36-Inch Professional				
	PRD364WDGU	PRD366WGU	PRD364WIGU	PRG364WDG	PRG366WG
Key Features					
Fuel Type	Dual-Fuel	Dual-Fuel	Dual-Fuel	Gas	Gas
Cooktop Configuration	4 + Griddle	6 Burners	4 + Induction	4 + Griddle	6 Burners
Electric Griddle	Yes	No	No	Yes	No
Liberty® Induction Module	No	No	Yes	No	No
Oven Configuration	Convection Oven	Convection Oven	Convection Oven	Convection Oven	Convection Oven
Thermador® Connected Experience by Home Connect® (Wi-Fi enabled)	Yes	Yes	Yes	Yes	Yes
Burner Performance					
Burner Style	Patented Pedestal Star® Burner	Patented Pedestal Star® Burner	Patented Pedestal Star® Burner	Patented Pedestal Star® Burner	Patented Pedestal Star® Burner
QuickClean Base®	Yes	Yes	Yes	Yes	Yes
ExtraHigh Star® Burner (22,000 BTU)	1	1	1	1	1
ExtraLow® Simmer Burners	4	4	4	4	4
General / Oven Properties					
Color TFT Touch Screen Interface	Yes	Yes	Yes	Yes	Yes
Oven Capacity	5.7 cu. ft.	5.7 cu. ft.	5.7 cu. ft.	5.7 cu. ft.	5.7 cu. ft.
Convection Oven	Yes	Yes	Yes	Yes	Yes
Telescopic Rack(s)	3	3	3	3	3
Self-Clean	Yes	Yes	Yes	Yes	Yes
SoftClose® Hinges	Yes	Yes	Yes	Yes	Yes
Star-K Certified	Yes	Yes	Yes	Yes	Yes
Dimensions					
Overall Appliance Dimensions (HxWxD) (in)	35 3/4"– 36 3/4" x 35 15/16" x 27 7/8"	35 3/4"– 36 3/4" x 35 15/16" x 27 7/8"	35 3/4"– 36 3/4" x 35 15/16" x 27 7/8"	35 3/4"– 36 3/4" x 35 15/16" x 27 7/8"	35 3/4"– 36 3/4" x 35 15/16" x 27 7/8"
Required Cutout Size (HxWxD) (in)	35 3/4"– 36 3/4" x 36" x 24"– 25 1/8"	35 3/4"– 36 3/4" x 36" x 24"– 25 1/8"	35 3/4"– 36 3/4" x 36" x 24"– 25 1/8"	35 3/4"– 36 3/4" x 36" x 24"– 25 1/8"	35 3/4"– 36 3/4" x 36" x 24"– 25 1/8"

Visit Thermador.com for complete specifications or text a Thermador model number to 21432 to have specs sent to your phone

PRO GRAND® OPTIONAL ACCESSORIES

27-Inch Commercial-Depth, Professional

	60-Inch, Dual-Fuel	
	PRD606WEG	PRD606WESG
PWOKRINGHC – Wok Ring	✓	✓
PA12CHPBLK – Chopping Block / Cutting Board	✓	✓
PAGRIDDLE – Professional Griddle, Sits on Top of Grates Over 2 Star Burners, High-Release Coating	✓	✓
PA12GRILLW – 12" Pro Grill Plate with Tray, (for Griddle Models), Non-Fusion Coating		
PAGRIDLFW – 12" Pro Griddle with Tray, (Fusion Coating Option for Griddle Models)		
PA12GRILFW – 12" Grill Plate with Tray (for Griddle Models), Fusion Coating		
PA12LCVRW – 12" Professional Griddle Cover		
PA24CVRR – 24" Griddle Cover	✓	✓
PA60WLBG – 7" Low Backguard*	✓	✓
PA60WTKG – Toekick	✓	✓
PARKB60SGY – Blue Knob Kit	✓	
PARKB60CGY – Blue Knob Kit		✓
PALPKITDGW – LP Conversion Kit, Pro Grand Dual Fuel Models with 4 and 6 Burners	✓	✓
PAALTKITGW – High Altitude Kit, Natural Gas or Dual-Fuel Pro Grand Ranges, 5,400 ft. to 10,200 ft.	✓	✓
Contact Customer Support – High Altitude Kit, Gas or Dual-Fuel Pro Grand Ranges Connected to LP Gas, 10,000 ft. to 10,200 ft.	✓	✓

*Models PCG305xx, PRD305xx, PRD606xx, PRG305xx, PRG304xx, PRD304xx, PRx488xx, PRIxxxxxx are suitable for 0" rear clearance to combustible surfaces. All other models: when using the included Island Trim a minimum 6" (152 mm) rear clearance is required to a combustible surface. When installing against a combustible surface, a Thermador® Low Backguard is required for a 0" rear clearance to the combustible surface. A Thermador Low Backguard must be purchased separately. A rear clearance to a surface covered in a noncombustible material (metal, ceramic tile, brick, marble, or stone) is 0" when using the included Island Trim. Clearances of less than 6" (152 mm) should be approved by the local codes and/or by the local authority having jurisdiction. Clearances from non-combustible materials are not part of the ANSI Z21.1 scope and are not certified by CSA.

Visit Thermador.com for complete specifications or text a Thermador model number to 21432 to have specs sent to your phone

PRO GRAND® OPTIONAL ACCESSORIES

27-Inch Commercial-Depth, Professional

	60-Inch, Dual-Fuel	
	PRD606WESG	PRD606WEG
CSRACKH – Wire Rack	✓	
11027159 – Cooking Pan, Full Size, 1 5/8" Deep	✓	
00577551 – Perforated Cooking Pan, Full Size, 1 5/8" Deep	✓	
00741839 – Baking Tray, Full Size, 1 1/8" Deep	✓	
00577552 – Cooking Pan, Half Size, 1 5/8" Deep	✓	
00577553 – Perforated Cooking Pan, Half Size, 1 5/8" Deep	✓	

	48-Inch, Dual-Fuel			
	PRD48WDSGU	PRD48WISGU	PRD486WDGU	PRD486WIGU
TEPPAN1016 – Liberty® Induction Teppanyaki		✓		✓
CHEFSPAN08 – 10" Stainless Steel Pan		✓		✓
TROASTERT – Stainless Steel Roaster Pan		✓		✓
CSRACKH – Wire Rack	✓	✓		
11027159 – Cooking Pan, Full Size, 1 5/8" Deep	✓	✓		
00577551 – Perforated Cooking Pan, Full Size, 1 5/8" Deep	✓	✓		
00741839 – Baking Tray, Full Size, 1 1/8" Deep	✓	✓		
00577552 – Cooking Pan, Half Size, 1 5/8" Deep	✓	✓		
577553 – Perforated Cooking Pan, Half Size, 1 5/8" Deep	✓	✓		

PRO GRAND® OPTIONAL ACCESSORIES

27-Inch Commercial-Depth, Professional

	48-Inch, Dual-Fuel				48-Inch, Gas
	PRD48WDSGU	PRD48WISGU	PRD486WDGU	PRD486WIGU	PRG486WDG
PWOKRINGHC – Wok Ring	✓	✓	✓	✓	✓
PA12CHPBLK – Chopping Block / Cutting Board	✓	✓	✓	✓	✓
PAGRIDDLE – Professional Griddle, Sits on Top of Grates Over 2 Star Burners, High-Release Coating	✓	✓	✓	✓	✓
PA12GRILLW – 12" Pro Grill Plate with Tray, (for Griddle Models), Non-Fusion Coating	✓		✓		✓
PAGRIDLFW – 12" Pro Griddle with Tray, (Fusion Coating Option for Griddle Models)	✓		✓		✓
PA12GRILFW – 12" Grill Plate with Tray (for Griddle Models), Fusion Coating	✓		✓		✓
PA12LCVRW – 12" Professional Griddle Cover	✓		✓		✓
PA48WLBG – 7" Low Backguard*	✓	✓	✓	✓	✓
PA48WTKG – Toekick	✓	✓	✓	✓	✓
PARKB48CGY – Blue Knob Kit		✓	✓	✓	
PARKB48SGY – Blue Knob Kit	✓				✓
PALPKITDGW – LP Conversion Kit, Pro Grand Dual Fuel Models with 4 and 6 Burners	✓	✓	✓	✓	
PALPKITGGW – LP Conversion Kit, Pro Grand Gas Models with 4 and 6 Burners					✓
PAALTKITGW – High Altitude Kit, Natural Gas or Dual-Fuel Pro Grand Ranges, 5,400 ft. to 10,200 ft.	✓	✓	✓	✓	✓
Contact Customer Support – High Altitude Kit, Gas or Dual-Fuel Pro Grand Ranges Connected to LP Gas, 10,000 ft. to 10,200 ft.	✓	✓	✓	✓	✓

*Models PCG305xx, PRD305xx, PRD606xx, PRG305xx, PRG304xx, PRD304xx, PRx488xx, PRIxxxxxx are suitable for 0" rear clearance to combustible surfaces. All other models: when using the included Island Trim a minimum 6" (152 mm) rear clearance is required to a combustible surface. When installing against a combustible surface, a Thermador® Low Backguard is required for a 0"rear clearance to the combustible surface. A Thermador Low Backguard must be purchased separately. A rear clearance to a surface covered in a noncombustible material (metal, ceramic tile, brick, marble, or stone) is 0" when using the included Island Trim. Clearances of less than 6" (152 mm) should be approved by the local codes and/or by the local authority having jurisdiction. Clearances from non-combustible materials are not part of the ANSI Z21.1 scope and are not certified by CSA.

PRO GRAND® OPTIONAL ACCESSORIES

27-Inch Commercial-Depth, Professional

	36-Inch, Dual-Fuel			*36-Inch, Gas*	
	PRD364WDGU	PRD366WGU	PRD364WIGU	PRG364WDG	PRG366WG
PWOKRINGHC – Wok Ring	✓	✓	✓	✓	✓
PA12CHPBLK – Chopping Block / Cutting Board	✓	✓	✓	✓	✓
PAGRIDDLE – Professional Griddle, Sits on Top of Grates Over 2 Star Burners, High-Release Coating	✓	✓	✓	✓	✓
PA12GRILLW – 12" Pro Grill Plate with Tray, (for Griddle Models), Non-Fusion Coating	✓			✓	
PAGRIDLFW – 12" Pro Griddle with Tray, (Fusion Coating Option for Griddle Models)	✓			✓	
PA12GRILFW – 12" Grill Plate with Tray (for Griddle Models), Fusion Coating	✓			✓	
PA12LCVRW – 12" Professional Griddle Cover	✓			✓	
PA36WLBG – 7" Low Backguard*	✓	✓	✓	✓	✓
PA36WTKG – Toekick	✓	✓	✓	✓	✓
PARKB36CGY – Blue Knob Kit	✓	✓		✓	
PARKB36IGY – Blue Knob Kit			✓		
PARKB36GY – Blue Knob Kit					✓
PALPKITDGW – LP Conversion Kit, Pro Grand Dual Fuel Models with 4 and 6 Burners	✓	✓	✓		
PALPKITGGW – LP Conversion Kit, Pro Grand Gas Models with 4 and 6 Burners				✓	✓
PAALTKITGW – High Altitude Kit, Natural Gas or Dual-Fuel Pro Grand Ranges, 5,400 ft. to 10,200 ft.	✓	✓	✓	✓	✓
Contact Customer Support – High Altitude Kit, Gas or Dual-Fuel Pro Grand Ranges Connected to LP Gas, 10,000 ft. to 10,200 ft.	✓	✓	✓	✓	✓
TEPPAN1016 – Liberty® Induction Teppanyaki			✓		
CHEFSPAN08 – 10" Stainless Steel Pan			✓		
TROASTERT – Stainless Steel Roaster Pan			✓		

*Models PCG305xx, PRD305xx, PRD606xx, PRG305xx, PRG304xx, PRD304xx, PRx488xx, PRIxxxxxx are suitable for 0" rear clearance to combustible surfaces. All other models: when using the included Island Trim a minimum 6" (152 mm) rear clearance is required to a combustible surface. When installing against a combustible surface, a Thermador® Low Backguard is required for a 0" rear clearance to the combustible surface. A Thermador Low Backguard must be purchased separately. A rear clearance to a surface covered in a noncombustible material (metal, ceramic tile, brick, marble, or stone) is 0" when using the included Island Trim. Clearances of less than 6" (152 mm) should be approved by the local codes and/or by the local authority having jurisdiction. Clearances from non-combustible materials are not part of the ANSI Z21.1 scope and are not certified by CSA.

PRO GRAND® PLANNING INFORMATION

Professional Ranges

Model Options

There are three sizes of Thermador Pro Grand Ranges to choose from—60-inch, 48-inch and 36-inch. Models are available in your choice of all-gas or dual-fuel configurations. All models are 27-inches deep and available in stainless steel with a porcelain cooktop surface. Ranges are LP convertible by ordering the specified kit. Be sure to reference the correct model information in this design guide.

Installation Considerations

The information in this design guide provides key features, product dimensions, cutouts and installation specifications. Before installing a Thermador Pro Grand Range, be sure to verify the cutout dimensions and electrical / gas connections. Installation instructions are subject to change. Always consult with the installation manual included with the product for complete details prior to the installation.

Installation Options

Thermador Pro Grand Ranges feature a bold, professional design and a commercial-depth of 27-inches. These ranges can be installed in a wall or island installation.

Ventilation Requirements

We strongly recommend that a Thermador Professional® Wall or Island Hood or Custom Insert be installed with all Thermador Pro Grand Ranges. Reference the selection guide in the ventilation section for compatible Thermador hoods. Downdraft ventilation should not be used. Do not install a microwave-hood combination above the cooktop, as these types of units do not provide the proper ventilation and are not suitable for use with Thermador Pro Grand Ranges.

Important Ventilation Notes:

- For wall installations, the hood width must, at a minimum, equal the nominal width of the appliance cooking surface. Where space permits, a hood larger in width than the cooking surface may be desirable for improved ventilation performance.
- For island installations, the hood width should, at a minimum, overhang the appliance cooking surface by 3" on each side.
- Due to the high heat capability of these cooktops, particular attention should be paid to the hood and duct work installation to assure it meets local building codes.
- For best smoke elimination, the lower edge of the hood should be installed 30"–36" above the appliance cooking surface.
- If the hood contains any combustible materials (i.e., a wood covering), it must be 36" or greater distance above the cooking surface.

Electrical and Gas Specifications

Be sure your appliance is properly installed and grounded by a qualified technician. Installation, electrical and gas connections, and grounding must comply with all applicable local codes.

Natural Gas or LP

Thermador Dual-Fuel Pro Grand Ranges are shipped by the factory to operate on natural gas. They must be converted for use with propane. Verify that the type of gas being used at the installation site matches the type of gas used by the appliance. If the location / job site requires conversion from natural gas to propane (LP), order the specified LP conversion kit. Field conversion must be done by qualified service personnel only. Please refer to the LP Conversion Instructions for further information.

A manual gas shut-off valve must be installed external to the appliance, in a location accessible from the front, for the purpose of shutting off the gas supply. The supply line must not interfere with the back of the unit.

Natural Gas Requirements:

- Inlet Connection: 3/4" NPT external, 1/2" NPT internal (Minimum 3/4" diam. flex line)
- Supply Pressure: 6" min. to 14" max. water column (14.9 to 34.9 mb)
- Manifold Pressure: 5" water column (12.5 mb)

Propane Gas Requirements:

- Inlet Connection: 3/4" NPT external, 1/2" NPT internal (Minimum 3/4" diam. flex line)
- Supply Pressure: 11" min. to 14" max. water column (27.4 mb to 34.9 mb)
- Manifold Pressure: 10" water column (24.9 mb)

High Altitude:

High altitude kits are available for Thermador Pro Harmony Ranges. Reference the Accessory chart or Contact Customer Support for details.

Visit Thermador.com for complete specifications or text a Thermador model number to 21432 to have specs sent to your phone

PRO GRAND® PLANNING INFORMATION

Professional Ranges

Dual-Fuel:

Thermador Pro Grand Dual-Fuel Ranges are dual rated, designed to be connected to either 240 / 208V AC, 60 Hz, 4-wire, single-phase power supply. The connection may be made with a range supply cord kit (purchased separately) or by hard-wiring to the power supply. A dedicated circuit breaker is required.

Model	*Required Circuit Breaker*
	240 / 208V AC, 60Hz
PRD606WESG	50 A
PRD606WEG	50 A
PRD48WDSGU	50 A
PRD48WISGU	50 A
PRD486WDGU	50 A
PRD486WIGU	50 A
PRD364WDGU	30 A
PRD366WGU	30 A
PRD364WIGU	50 A

All-Gas:

Thermador Pro Grand All-Gas Ranges are equipped with a 3-wire plug and are designed to be connected to a 120V AC, 60 Hz, single-phase power supply. A dedicated circuit breaker is required.

Model	*Required Circuit Breaker*
	120V AC, 60 Hz
PRG486WDG	20 A
PRG364WDG	20 A
PRG366WG	15 A

Electrical Supply

IMPORTANT: The cord supplied with gas ranges having an electric griddle requires a NEMA 5-20 receptacle as shown here. Local codes my require a different wiring method.

NEMA 5-20 RECEPTACLE

PLUG

WARNING: This appliance is equipped with a three-prong grounding plug for protection against shock hazard and should be plugged directly into a properly grounded receptacle. DO NOT cut or remove the grounding prong from this plug. DO NOT ALTER THIS PLUG.

Electrical and Gas Locations

Typical placement of the electrical and gas supply can be found within the "Cutout and Range Dimensions" located on the installation pages. Alternate placement within the supply zone is acceptable. Dual-Fuel ranges may be connected to the power supply with a range supply cord kit (sold separately) or by hard-wiring to the power supply. All-gas ranges may be connected to the power supply with the supplied range cord or by hard-wiring. It is the responsibility of the installer to provide the proper wiring components (cord or conduit and wires) and complete the electrical connection as dictated by local codes and ordinances and/or the National Electric Code. The units must be properly grounded.

Installation of the range must be planned so that the rough-in of the junction box for the receptacle or conduit connection will allow maximum clearance to the rear of the unit.

PRO GRAND® INSTALLATION

Professional Ranges

60-Inch Range Dimensions

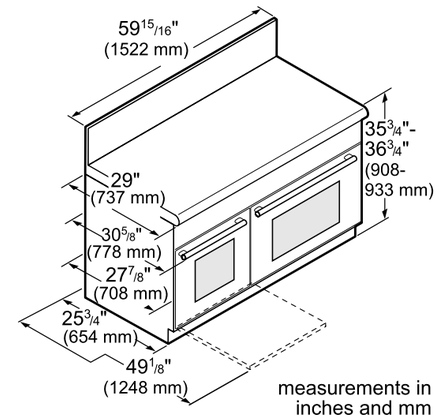

48-Inch Range Dimensions

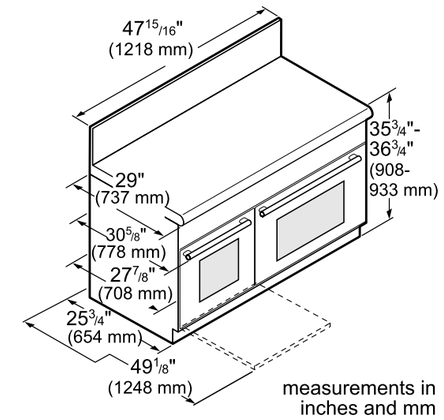

36-Inch Range Dimensions

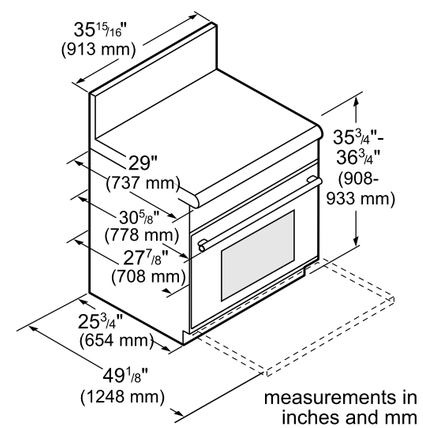

Range Cutout Dimensions

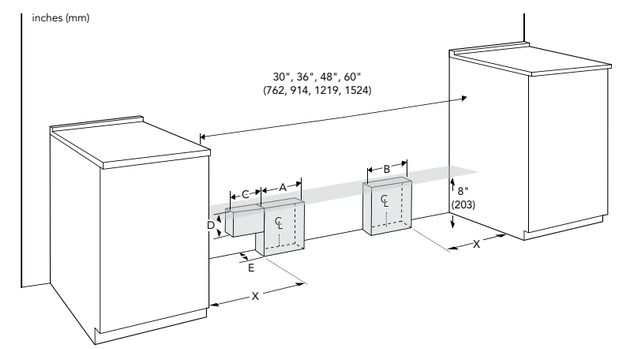

Range model	Gas zone A	Electric zone B	X	C	D	E
All Harmony series	4'' (102)	6'' (152)	5'' (127)	N/A	N/A	2'' (51)
36''/ 48'' Grand series	4'' (102)	6'' (152)	8'' (203)	4'' (102)	3'' (76)	2'' (51)
60'' Grand series	4'' (102)	6'' (152)	8'' (203)	4'' (102)	3'' (76)	1'' (25)

60-Inch, 48-Inch and 36-Inch Range Dimensions and Clearance Requirements With "Low Back"

NOTE: A 36-inch minimum clearance is required between the top of the cooking surface and the bottom of an unprotected cabinet. A 30-inch clearance can be used when the bottom of the wood or metal cabinet is protected by not less than **1/4** inch of a flame retardant material covered with not less than No. 28 MSG sheet steel, 0.015 inch (0.4 mm) thick stainless steel, 0.024 inch (0.6 mm) aluminum, or 0.020 inch (0.5 mm) thick copper.

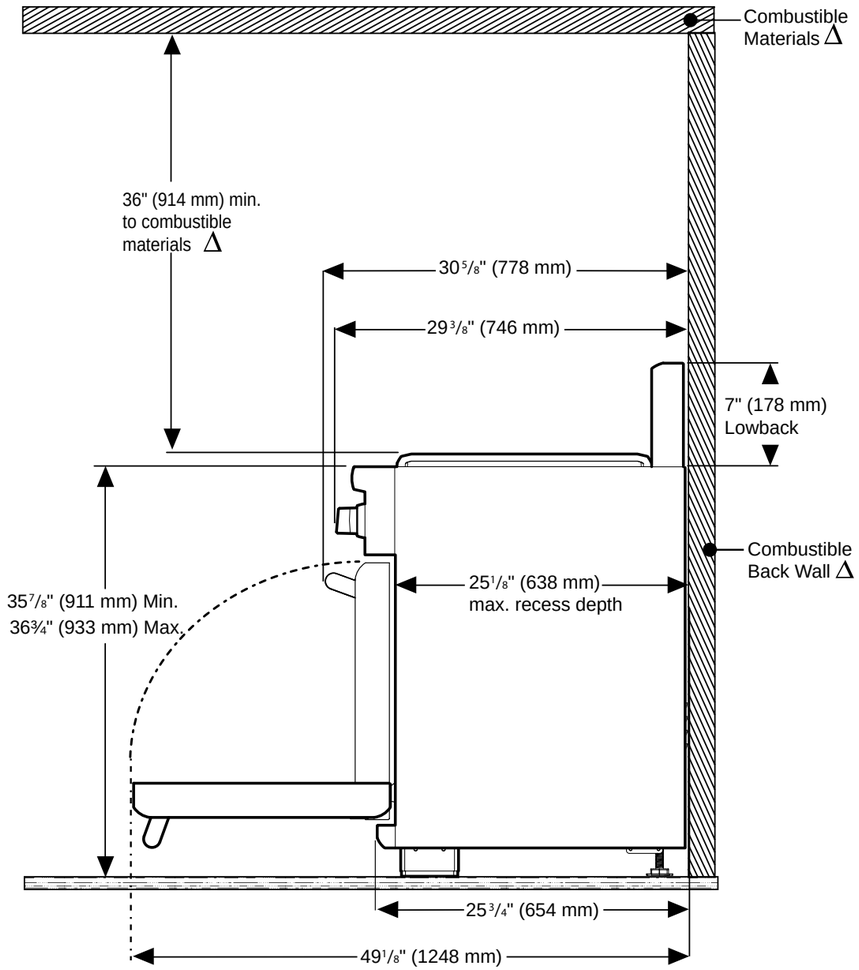

Δ 60-Inch Pro Grand Ranges are suitable for 0" rear clearance to combustible surfaces. All other models: when using the included Island Trim a minimum 6" (152 mm) rear clearance is required to a combustible surface. When installing against a combustible surface, a Thermador® Low Backguard is required for a 0" rear clearance to the combustible surface. A Thermador Low Backguard must be purchased separately. A rear clearance to a surface covered in a noncombustible material (metal, ceramic tile, brick, marble, or stone) is 0" when using the included Island Trim. Clearances of less than 6" (152 mm) should be approved by the local codes and/or by the local authority having jurisdiction. Clearances from non-combustible materials are not part of the ANSI Z21.1 scope and are not certified by CSA.

60-Inch, 48-Inch and 36-Inch Range Dimensions and Clearance Requirements With "Flush Island Trim"

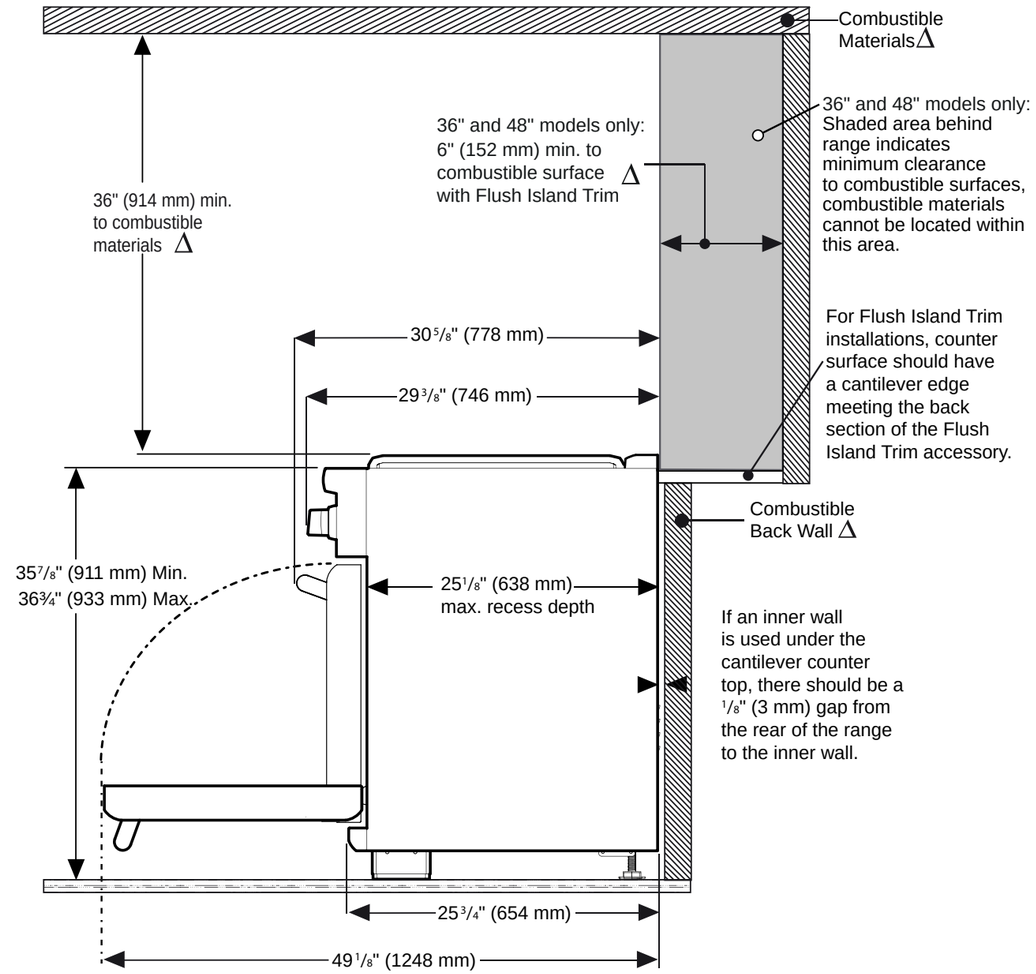

Δ 60-Inch Pro Grand Ranges are suitable for 0" rear clearance to combustible surfaces. All other models: when using the included Island Trim a minimum 6" (152 mm) rear clearance is required to a combustible surface. When installing against a combustible surface, a Thermador® Low Backguard is required for a 0" rear clearance to the combustible surface. A Thermador Low Backguard must be purchased separately. A rear clearance to a surface covered in a noncombustible material (metal, ceramic tile, brick, marble, or stone) is 0" when using the included Island Trim. Clearances of less than 6" (152 mm) should be approved by the local codes and/or by the local authority having jurisdiction. Clearances from non-combustible materials are not part of the ANSI Z21.1 scope and are not certified by CSA.

RANGETOPS

FOR THE PROFESSIONAL COLLECTION

Thermador® Rangetops feature an array of innovative new features, such as LED illumination of the control panel knobs, combined with exclusive heritage features, like our patented Pedestal Star® Burner with QuickClean Base®.

RANGETOP

Professional
48-INCH – PCG486WD

Shown with Pro Grill accessory and Blue Knob Kit accessory (each sold separately). See page 46.

PROFESSIONAL RANGETOPS

48-Inch

6 Burners with Griddle

- 6 Patented Pedestal Star® Burners (2 with ExtraLow®)
- Electric Griddle
- Porcelain Surface
- LED Knob Illumination

48-Inch – PCG486WD

Blue Knob Kit

Accessorize any Professional Rangetop with a Signature Thermador Blue Knob Kit.

See page 46

★ ***Thermador® Exclusive***

See page 46 for accessories
Visit Thermador.com for complete specifications or text a Thermador model number to 21432 to have specs sent to your phone

PROFESSIONAL RANGETOPS

36-Inch

4 Burners with Griddle

- 4 Patented Pedestal Star® Burners (2 with ExtraLow®)
- Electric Griddle
- Porcelain Surface
- LED Knob Illumination

36-Inch – PCG364WD

6 Burners

- 6 Patented Pedestal Star® Burners (2 with ExtraLow®)
- Porcelain Surface
- LED Knob Illumination

36-Inch – PCG366W

PROFESSIONAL RANGETOPS

30-Inch

★ *5 Burners*

5 BURNERS 30-Inch DESIGN

- 5 Patented Pedestal Star® Burners (2 with ExtraLow®)
- Porcelain Surface
- LED Knob Illumination

30-Inch – PCG305W

PROFESSIONAL RANGETOPS QUICK REFERENCE CHART

	Professional	
	PCG486WD 48-INCH GAS	PCG364WD 36-INCH GAS
Key Features		
Cooktop Configuration	6 Burners + Griddle	4 Burners + Griddle
Burner Style	Patented Pedestal Star® Burner	Patented Pedestal Star® Burner
QuickClean Base®	Yes	Yes
LED Downlighting	Yes	Yes
Star-K Certified	Yes	Yes
General Properties		
Controls	Metal Knobs	Metal Knobs
Sealed Burners	Yes	Yes
Grate Material	Cast Iron	Cast Iron
Griddle Material	Non-Stick, Rust-Proof Cast-Aluminum	Non-Stick, Rust-Proof Cast-Aluminum
Burner Performance		
ExtraLow® Simmer Burners	2	2
Power of Center 12" Electric Griddle (W)	1,630 W (6-Pass 2x)	1,630 W (6-Pass 2x)
Electronic Re-ignition	Yes	Yes
Dimensions		
Overall Appliance Dimensions (HxWxD) (in)	8 1/8" x 47 15/16" x 25 13/16"	8 1/8" x 35 15/16" x 25 13/16"
Required Cutout Size (HxWxD) (in)	7 11/16" x 46 1/4" x 22 13/16"	7 11/16" x 35 1/8" x 22 13/16"

Visit Thermador.com for complete specifications or text a Thermador model number to 21432 to have specs sent to your phone

PROFESSIONAL RANGETOPS QUICK REFERENCE CHART

	Professional	
	PCG366W 36-INCH GAS	PCG305W 30-INCH GAS
Key Features		
Cooktop Configuration	6 Burners	5 Burners
Burner Style	Patented Pedestal Star® Burner	Patented Pedestal Star® Burner
QuickClean Base®	Yes	Yes
LED Downlighting	Yes	Yes
Star-K Certified	Yes	Yes
General Properties		
Controls	Metal Knobs	Metal Knobs
Sealed Burners	Yes	Yes
Grate Material	Cast Iron	Cast Iron
Griddle Material	N/A	N/A
Burner Performance		
ExtraLow® Simmer Burners	2	2
Power of Center 12" Electric Griddle (W)	N/A	N/A
Electronic Re-ignition	Yes	Yes
Dimensions		
Overall Appliance Dimensions (HxWxD) (in)	8 1/8" x 35 15/16" x 25 13/16"	8 1/8" x 29 15/16" x 25 13/16"
Required Cutout Size (HxWxD) (in)	7 11/16" x 35 1/8" x 22 13/16"	7 11/16" x 29 1/8" x 22 13/16"

Visit Thermador.com for complete specifications or text a Thermador model number to 21432 to have specs sent to your phone

PROFESSIONAL RANGETOPS OPTIONAL ACCESSORIES

	48-Inch	36-Inch		30-Inch
	PCG486WD	PCG364WD	PCG366W	PCG305W
PA48WLBC – 10" Backguard, 48" Rangetop	✓			
PA36WLBC – 10" Backguard, 36" Rangetop		✓	✓	
PA30WLBC – 10" Backguard, 30" Rangetop				✓
PAGRIDDLE Griddle Sits on Top of Grates Over 2 Star Burners, Non-Stick High-Release Coating	✓	✓	✓	✓
PA12GRILLW 12" Pro Grill with Tray, (for Griddle Models), Non-Stick High-Release Coating	✓	✓		
PAGRIDLFW 12" Pro Griddle with Tray, (for Griddle Models), Fusion Coating	✓	✓		
PA12GRILFW 12" Pro Grill with Tray (for Griddle Models), Fusion Coating	✓	✓		
PA12LCVRW 12" Pro Griddle Cover (for Griddle Models)	✓	✓		
PWOKRINGHC Wok Ring	✓	✓	✓	✓
PAKNOBLUWR Metallic Blue Knob Kit	✓	✓	✓	✓
PA12CHPBLK 12" Chopping Block / Cutting Board	✓	✓	✓	✓
PALPKITHW LP Conversion Kit, Pro Rangetop Models with 4 and 6 Burners	✓	✓	✓	
PALPKITHW5 LP Conversion Kit, Pro Rangetop 5 Burner Model Only				✓
PAALTKITH High Altitude Kit, Natural Gas Pro Rangetops, 5,400 ft. to 10,200 ft.	✓	✓	✓	✓

Visit Thermador.com for complete specifications or text a Thermador model number to 21432 to have specs sent to your phone

PLANNING INFORMATION

Professional Rangetops

Model Options

There are three sizes of Thermador Professional® Rangetops to choose from—30-inch, 36-inch and 48-inch. Models are available with various rangetop configurations. Every model is LP convertible by ordering a conversion kit. Be sure to reference the correct model information in this design guide.

Installation Considerations

The information in this design guide provides key features, product dimensions, cutouts and installation specifications. Before installing a Thermador Professional Rangetop, be sure to verify the cutout dimensions and electrical / gas connections. Installation instructions are subject to change. Always consult with the installation manual included with the product for complete details prior to the installation.

Installation Options

To ensure professional results, the cabinet and countertop openings should be prepared by a qualified cabinet worker. The rangetop can be installed in various positions with the front either flush or projecting, depending on the countertop's depth. The rangetop is designed to hang from the countertop by its side flanges. The countertop however, must be strong enough to support the rangetop. It may be necessary to add a supporting cleat along each side or a 2" x 4" corner brace. Another alternative would be to construct a deck to set the rangetop on. Consult with the installation manual packed with the product for complete details before installing.

Above a Warming Drawer

Thermador Professional Rangetops may be installed above a Thermador Warming Drawer to create a convenient cooking center. A minimum 2 3/4" (70 mm) clearance is required between the bottom of the rangetop and the top of the warming drawer. Refer to the warming drawer section for additional specifications.

Rear Clearance Requirements

30-Inch model PCG305W is suitable for 0" rear clearance to combustible surfaces.

All other models must meet these clearances:

Thermador recommends a minimum 6" (152 mm) rear clearance to a combustible surface. Clearances of less than 6" must be approved by the local codes and / or by the local authority having jurisdiction.

When installing against a combustible surface, a Thermador Low Backguard (purchased separately) is required for a 0" rear clearance to the combustible surface.

Electrical and Gas Specifications

Be sure your appliance is properly installed and grounded by a qualified technician. Installation, electrical and gas connections, and grounding must comply with all applicable local codes.

Thermador Professional® Rangetops are equipped with a 3-wire plug and are designed to be connected to a 120V AC, 60 Hz, single-phase power supply. A dedicated circuit breaker is required.

Model	*Required Circuit Breaker*
	120V AC, 60Hz
PCG486WD	20 A
PCG364WD	20 A
PCG366W	15 A
PCG305W	15 A

Electrical Supply

The cord supplied with the gas ranges having an electric griddle requires a NEMA 5-20 receptacle. All other gas units require a NEMA 5-15 receptacle.

NEMA 5-15 NEMA 5-20

Gas Requirements and Hookup

Rangetops are shipped by the factory to operate on natural gas. They must be converted for use with propane. Verify that the type of gas being used at the installation site matches the type of gas used by the appliance. If the location / job site requires conversion from natural gas to propane (LP), order the specified LP conversion kit. Field conversion must be done by qualified service personnel only. Please refer to the LP Conversion Instructions for further information.

Natural Gas Requirements:

- Inlet Connection: 1/2" NPT internal (Minimum 3/4" dia. flex line)
- Supply Pressure: 6" min. to 14" max. water column (14.9 to 34.9 mb)
- Manifold Pressure: 5" water column (12.5 mb)

Propane Gas Requirements:

- Inlet Connection: 1/2" NPT internal (Minimum 3/4" dia. flex line)
- Supply Pressure: 11" min. to 14" max. water column (27.4 mb to 34.9 mb)
- Manifold Pressure: 10" water column (24.9 mb)

A manual gas shut-off valve must be installed external to the appliance, in a location accessible from the front, for the purpose of shutting off the gas supply. The supply line must not interfere with the back of the unit.

High Altitude

High altitude kits are available for Thermador Pro Rangetops. Reference the Accessory chart or Contact Customer Support for details.

PLANNING INFORMATION

Professional Rangetops

Gas Inlet Location

	30-Inch	36-Inch	48-Inch
From left side to centerline of gas inlet	6 3/8" (152 mm)	11" (267 mm)	
From rear to centerline of gas inlet	2 1/4" (54 mm)		

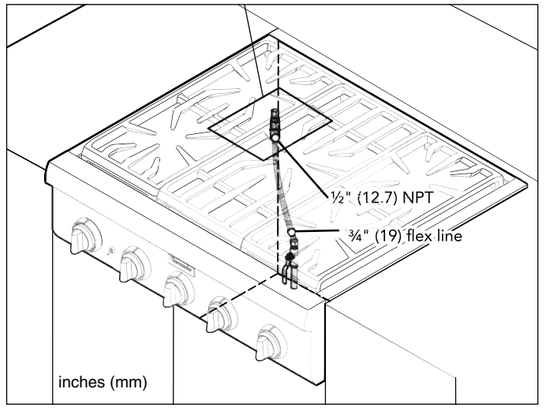

Ventilation Requirements

We strongly recommend that a Thermador Professional Wall Hood, Island Hood or Custom Insert be installed with all Thermador Professional Rangetops. Due to the high heat capability of these units, particular attention should be paid to the hood and duct work installation to assure it meets local building codes.

Downdraft ventilation should not be used. Due to the high heat of the Rangetop burners, installing a microwave oven with a ventilation system over the rangetop is not recommended on anything other than the 30" 5-Burner. Refer to OTR manufacturer's installation manual for clearances.

The following table indicates the ventilation hood options for use with Thermador Professional Rangetops. Refer to the Ventilation Selection Guide in the Ventilation section or www.Thermador.com for a complete selection of ventilation options, blowers, and accessories.

Width	*Configuration*	*Ventilation Options*
48"	6 Burners with Griddle	48" or 54" Pro Wall Hood 48" Wall Chimney Hood 54" Island Hood 48" or 54" Custom Insert
36"	4 Burners with Griddle, and 6 Burners	36" or 42" Pro Wall Hood 36" Wall Chimney Hood 42" Island Hood 36" or 42" Custom Insert
30"	5 Burners	30" or 36" Pro Wall Hood 30" or 36" Wall Chimney Hood 30" or 36" Drawer Hood 36" or 42" Island Hood 30" or 36" Custom Insert

Important Ventilation Notes:

- For wall installations, the hood width must, at a minimum, equal the width of the Rangetop. Where space permits, a hood larger in width than the Rangetop may be desirable for improved ventilation performance.
- For island installations, the hood width should overhang the width of the Rangetop by a minimum of 3" (76 mm) on each side.
- For best smoke elimination, the lower edge of the hood should be installed 30" (762 mm) above the range cooking surface.
- If the hood contains any combustible materials (i.e. a wood covering), it must be installed a minimum of 36" (914 mm) above the cooking surface.
- Due to the high volume of ventilation air, a source of outside replacement air is recommended. This is particularly important for tightly sealed and insulated homes.
- A qualified heating and ventilating contractor should be consulted.

INSTALLATION

Professional Rangetops

48" Rangetop Side View

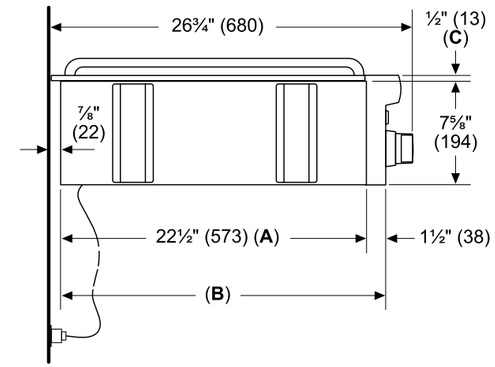

A: Cabinet face for installation with projecting control panel.
B: Cabinet face for installation with flush control panel.
C: Side flange

48-Inch Rangetop Cutout Dimensions

* Minimum recommended hood width equals that of the range or cooktop.

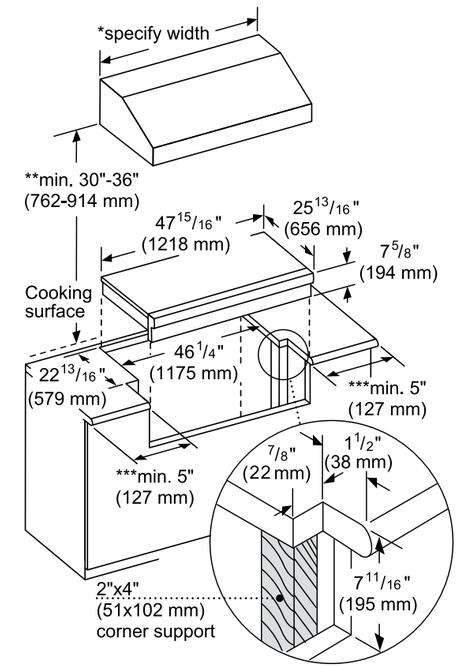

** 36" minimum clearance from cooking surface to combustible surfaces.
*** 5" minimum clearance from cooking surface to combustible side wall.

Note: Most hoods contain combustible components that must be considered when planning the installation.

measurements in inches (mm)

36-Inch Rangetop Cutout Dimensions

* Minimum recommended hood width equals that of the range or cooktop.

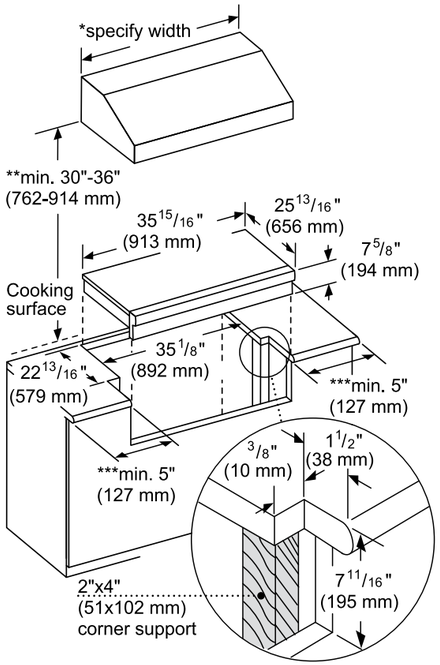

** 36" minimum clearance from cooking surface to combustible surfaces.
*** 5" minimum clearance from cooking surface to combustible side wall.

Note: Most hoods contain combustible components that must be considered when planning the installation.

measurements in inches (mm)

30-Inch Rangetop Cutout Dimensions

* Minimum recommended hood width equals that of the range or cooktop.

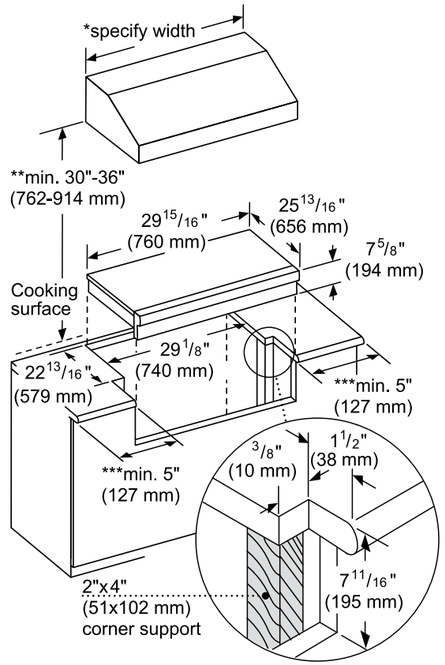

** 36" minimum clearance from cooking surface to combustible surfaces.
*** 5" minimum clearance from cooking surface to combustible side wall.

Note: Most hoods contain combustible components that must be considered when planning the installation.

measurements in inches (mm)

48-Inch and 36-Inch Rangetop Clearances

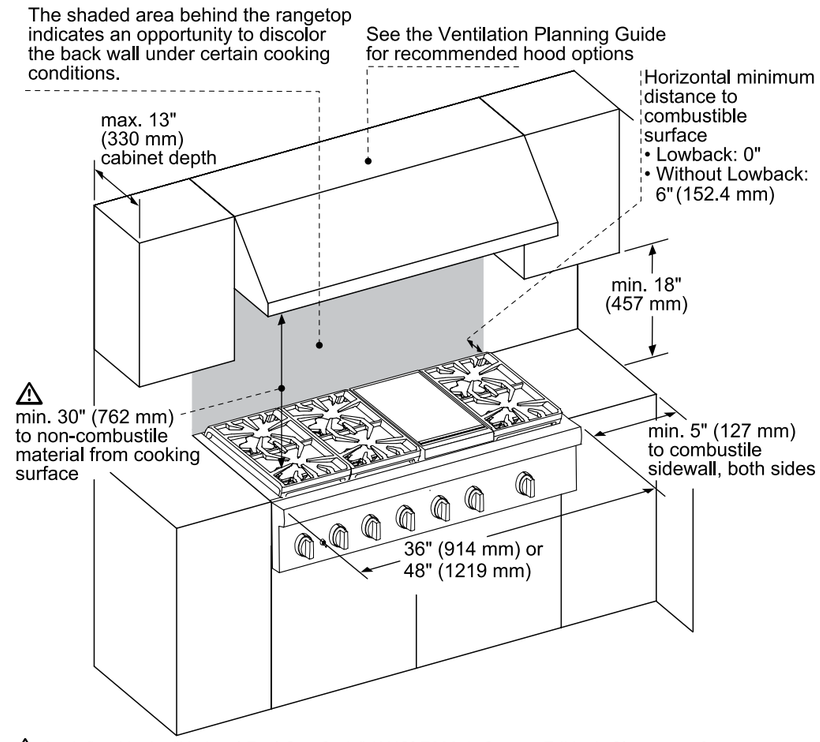

⚠ As defined in the "National Fuel Gas Code" (ANSI Z223.1, Current Edition). Clearances from non-combustible materials are not part of the ANSI Z21.1 scope and are not certified by CSA. Clearances must be approved by the local codes and/or by the local authority having jurisdiction.

measurements in inches (mm)

NOTE: A 36-inch minimum clearance is required between the top of the cooking surface and the bottom of an unprotected cabinet. A 30-inch clearance can be used when the bottom of the wood or metal cabinet is protected by not less than 1/4 inch of a flame retardant material covered with not less than No. 28 MSG sheet steel, 0.015 inch (0.4 mm) thick stainless steel, 0.024 inch (0.6 mm) aluminum, or 0.020 inch (0.5 mm) thick copper.

30-Inch Rangetop Installation with Hood

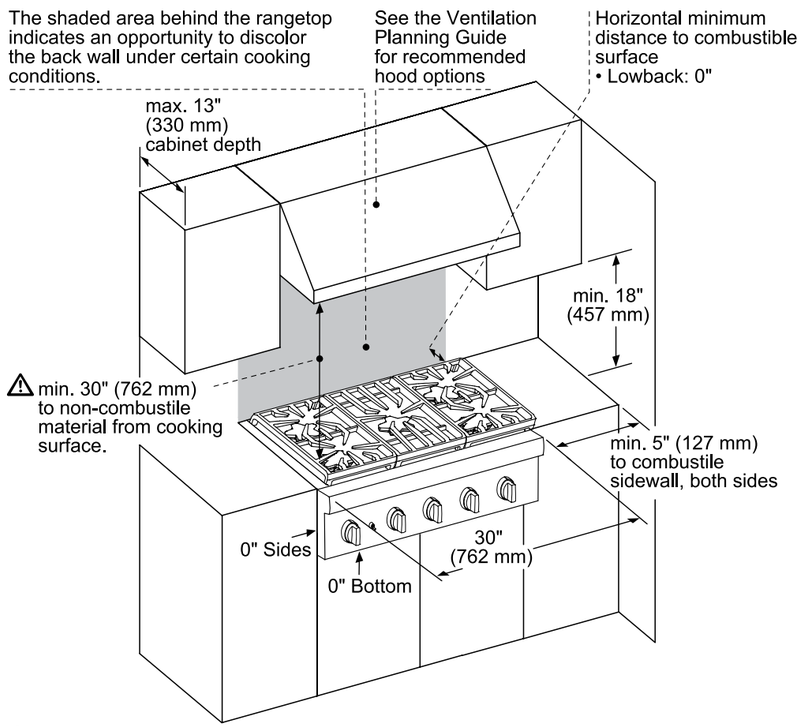

NOTE: A 36-inch minimum clearance is required between the top of the cooking surface and the bottom of an unprotected cabinet. A 30-inch clearance can be used when the bottom of the wood or metal cabinet is protected by not less than 1/4 inch of a flame retardant material covered with not less than No. 28 MSG sheet steel, 0.015 inch (0.4 mm) thick stainless steel, 0.024 inch (0.6 mm) aluminum, or 0.020 inch (0.5 mm) thick copper.

⚠ As defined in the "National Fuel Gas Code" (ANSI Z223.1, Current Edition). Clearances from non-combustible materials are not part of the ANSI Z21.1 scope and are not certified by CSA. Clearances must be approved by the local codes and/or by the local authority having jurisdiction.

measurements in inches (mm)

30-Inch Rangetop Installation with Over-the-Range Microwave

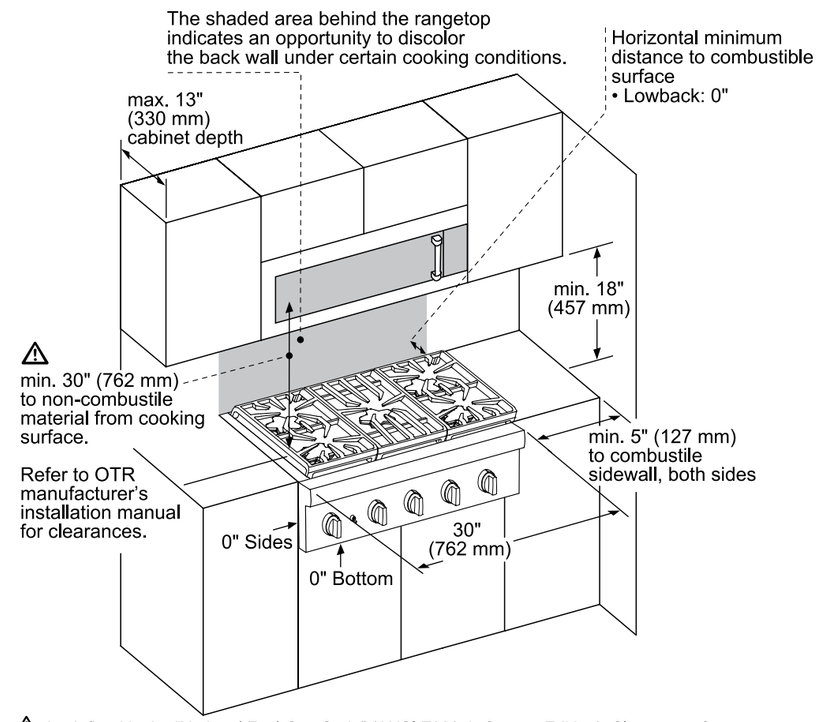

NOTE: See the Ventilation Planning Guide for recommended hood options. Due to the high heat of the burners, installing a microwave oven with a ventilation system over the appliance is not recommended on anything other than the 30" 5-Burner. Refer to the OTR manufacturer's installation manual for clearances.

⚠ As defined in the "National Fuel Gas Code" (ANSI Z223.1, Current Edition). Clearances from non-combustible materials are not part of the ANSI Z21.1 scope and are not certified by CSA. Clearances must be approved by the local codes and/or by the local authority having jurisdiction.

measurements in inches (mm)

Thermador Exclusive

Heavy-duty, removable rotisserie, cooks up to 12-pound roasts and poultry evenly on all sides.

Built-in OVENS

FOR MASTERPIECE® & PROFESSIONAL COLLECTIONS

Updated with vibrant color displays, stunning metallic gray glass, and luxurious stainless steel, the redesigned Thermador Collections are available in two bold styles: Masterpiece with contemporary handles for a sleek, modern look, and Professional with bold handles and rotating knobs.

LEFT SIDE OPENING DOOR BUILT-IN OVEN

Professional
30-INCH – POD301LW

RIGHT SIDE OPENING DOOR BUILT-IN OVEN

Professional
30-INCH – POD301RW

Thermador Exclusive

All-new Masterpiece® 30" Wall Ovens feature the sleek design of our Masterpiece Collection matched with Professional handles—offering the best of both worlds.

Kitchen Designed by: Sun West Custom Homes, New American Home

STEAM & CONVECTION OVENS

Professional & Masterpiece®

Home Connect

Professional

- Large 2.8 cu. ft. Cavity
- Steam, True Convection, Steam Convection and Broil
- 3 Telescopic Racks
- Multi-point Meat Probe

30-Inch – PODS301W

Masterpiece®

- Large 2.8 cu. ft. Cavity
- Steam, True Convection, Steam Convection and Broil
- 3 Telescopic Racks
- Multi-point Meat Probe

30-Inch – MEDS301WS

= *Steam Oven*

SPEED OVENS

Professional & Masterpiece®

Professional

- 10 Power Levels and 1.6 cu. ft. Capacity
- 36 CookSmart® Auto Programs
- Combines Convection Bake, Broil and Microwave

30-Inch – MC30WP

Masterpiece®

- 10 Power Levels and 1.6 cu. ft. Capacity
- 36 CookSmart® Auto Programs
- Combines Convection Bake, Broil and Microwave

30-Inch – MC30WS

See page 66 for accessories

Visit Thermador.com for complete specifications or text a Thermador model number to 21432 to have specs sent to your phone

SINGLE OVENS

Professional

Home Connect

- True Convection
- Rotisserie
- 3 Telescopic Racks
- 16 Cooking Modes
- Max Broil
- Multi-point Meat Probe
- Halogen Illumination

30-Inch – POD301W

Left Side Opening Door

30-Inch – POD301LW

Right Side Opening Door

30-Inch – POD301RW

- True Convection
- 1 Telescopic Rack
- 13 Cooking Modes
- Meat Probe
- Halogen Illumination
- SoftClose® Door

30-Inch – PO301W

SINGLE OVENS

Masterpiece® with Professional Handle

Home Connect

- True Convection
- 1 Telescopic Rack
- 11 Cooking Modes
- Halogen Illumination
- SoftClose® Door

30-Inch – ME301YP

Blue Knob Kit

Accessorize any Professional Oven with a Signature Thermador Blue Knob Kit.

See page 66

SINGLE OVENS

Masterpiece®

Home Connect

- True Convection
- Rotisserie
- 3 Telescopic Racks
- 16 Cooking Modes
- Max Broil
- Multi-point Meat Probe
- Halogen Illumination

30-Inch – MED301WS

Left Side Opening Door

30-Inch – MED301LWS

Right Side Opening Door

30-Inch – MED301RWS

- True Convection
- 1 Telescopic Rack
- 13 Cooking Modes
- Meat Probe
- Halogen Illumination
- SoftClose® Door

30-Inch – ME301WS

See page 66 for accessories

Visit Thermador.com for complete specifications or text a Thermador model number to 21432 to have specs sent to your phone

STEAM & CONVECTION COMBINATION OVENS

Professional & Masterpiece®

Home Connect

Professional

30-Inch – PODS302W

Masterpiece

30-Inch – MEDS302WS

Double Combination

- Convection Steam Oven and True Convection Oven
- Rotisserie
- 6 Telescopic Racks
- Cooking Modes, 17 Upper, 16 Lower
- Max Broil
- Multi-point Meat Probe
- LED / Halogen Illumination

= Steam Oven

COMBINATION OVENS

Professional & Masterpiece®

Home Connect*

Professional

30-Inch – PODMCW31W

Masterpiece

30-Inch – MEDMCW31WS

Triple Combination with Speed Oven and Warming Drawer

- Speed Oven, True Convection Oven and Warming Drawer
- Rotisserie
- 3 Telescopic Racks
- Cooking Modes, 36 Upper, 16 Lower
- Multi-point Meat Probe
- LED / Halogen Illumination

Professional

30-Inch – PODMC301W

Masterpiece

30-Inch – MEDMC301WS

Double Combination with Speed Oven

- Speed Oven and True Convection Oven
- Rotisserie
- 3 Telescopic Racks
- Cooking Modes, 36 Upper, 16 Lower
- Multi-point Meat Probe
- LED / Halogen Illumination

Professional

30-Inch – POM301W

Masterpiece

30-Inch – MEM301WS

Double Combination with Microwave

- Microwave and True Convection Oven
- 1 Telescopic Rack
- Cooking Modes, 9 Upper, 13 Lower
- Meat Probe
- LED / Halogen Illumination
- SoftClose® Doors

*Home Connect on lower oven only

See page 66 for accessories

Visit Thermador.com for complete specifications or text a Thermador model number to 21432 to have specs sent to your phone

DOUBLE OVENS

Professional

Home Connect

- True Convection in Both Ovens
- Rotisserie
- 4 Telescopic Racks
- Cooking Modes, 16 Upper, 13 Lower
- Max Broil
- Multi-point Meat Probe
- Halogen Illumination

30-Inch – POD302W

Left Side Opening Doors

30-Inch – POD302LW

Right Side Opening Doors

30-Inch – POD302RW

- True Convection in Both Ovens
- 2 Telescopic Racks
- 13 Cooking Modes, Upper & Lower
- Meat Probe
- Halogen Illumination
- SoftClose® Doors

30-Inch – PO302W

DOUBLE OVENS

Masterpiece® with Professional Handle

Home Connect

- True Convection, Upper
- 1 Telescopic Rack
- Cooking Modes, 11 Upper, 5 Lower
- Halogen Illumination
- SoftClose® Doors

30-Inch – ME302YP

Blue Knob Kit

Accessorize any Professional Oven with a Signature Thermador Blue Knob Kit.

See page 66

DOUBLE OVENS

Masterpiece®

Home Connect

- True Convection in Both Ovens
- Rotisserie
- 4 Telescopic Racks
- Cooking Modes, 16 Upper, 13 Lower
- Max Broil
- Multi-point Meat Probe
- Halogen Illumination

30-Inch – MED302WS

Left Side Opening Doors

30-Inch – MED302LWS

Right Side Opening Doors

30-Inch – MED302RWS

- True Convection in Both Ovens
- 2 Telescopic Racks
- 13 Cooking Modes, Upper & Lower
- Meat Probe
- Halogen Illumination
- SoftClose® Doors

30-Inch – ME302WS

See page 66 for accessories

Visit Thermador.com for complete specifications or text a Thermador model number to 21432 to have specs sent to your phone

SINGLE BUILT-IN OVENS QUICK REFERENCE CHART

	Professional			
= Steam Oven	30-Inch Steam and Convection (Non-Plumbed)	30-Inch Single	30-Inch Single	30-Inch Speed Oven
Drop-Down Door	PODS301W	POD301W	PO301W	MC30WP
Left Side Opening Door	—	POD301LW	—	—
Right Side Opening Door	—	POD301RW	—	—
Key Features				
Modes	(17) Bake, Broil, Roast, Convection Bake, Convection Broil, Convection Roast, Proof, Warm, Pizza, True Convection, Dehydrate, Speed Convection, Slow Roast, Steam, Steam Convection, Defrost, Reheat, Steam Program	(16) Bake, Broil, Max Broil, Roast, Convection Bake, Convection Broil, Max Convection Broil, Convection Roast, Proof, Warm, Pizza, True Convection, Dehydrate, Speed Convection, Slow Roast, Rotisserie	(13) Bake, Broil, Roast, Convection Bake, Convection Broil, Convection Roast, Proof, Warm, Pizza, True Convection, Dehydrate, Speed Convection, Slow Roast	36 CookSmart® Auto Programs (Including True Convection, Hi & Lo Broil, Keep Warm, Frozen Foods) + 10 levels of Microwaveable Power
Star-K Certified	Yes	Yes	Yes	No
Cleaning Type	Easy Clean, Ecolytic Clean	Self Clean, Easy Clean	Self Clean, Easy Clean	N/A
Thermador® Connected Experience by Home Connect® (Wi-Fi Enabled)	Yes	Yes	Yes	No
General Properties				
Oven Cavity Size	2.8 cu. ft.	4.5 cu. ft.	4.5 cu. ft.	1.6 cu. ft.
Telescopic Rack(s)	3	3	1	N/A
Meat Probe	Multi-point	Multi-point	Yes	No
Illumination Type	LED	Halogen	Halogen	LED
Interior Lights	3	2	2	1
SoftClose® Door	Yes	Yes	Yes	No
Dimensions				
Overall Appliance Dimensions (HxWxD) (in)	25 13/16" x 29 3/4" x 23 7/16"	29" x 29 3/4" x 24 1/2"	29" x 29 3/4" x 24 1/2"	19 5/8" x 29 3/4" x 22 3/8"
Required Cutout Size (HxWxD) (in) – Standard	24 1/2"– 25 7/16" x 28 1/2" x 23 1/2"	27"– 28 5/8" x 28 1/2" x 23 1/2"	27"– 28 5/8" x 28 1/2" x 23 1/2"	19 1/4" x 28 1/2" x 22"
Required Cutout Size (HxWxD) (in) – Flush	25 15/16" x 30" x 24 1/2"	29 1/8" x 30" x 24 1/2"	29 1/8" x 30" x 24 1/2"	20 1/8" x 30" x 23 1/2"

Visit Thermador.com for complete specifications or text a Thermador model number to 21432 to have specs sent to your phone

SINGLE BUILT-IN OVENS QUICK REFERENCE CHART

	Masterpiece®				
= Steam Oven	30-Inch Single Masterpiece with Professional Handle	30-Inch Steam and Convection (Non-Plumbed)	30-Inch Single	30-Inch Single	30-Inch Speed Oven
Drop-Down Door	ME301YP	MEDS301WS	MED301WS	ME301WS	MC30WS
Left Side Opening Door	—	—	MED301LWS	—	—
Right Side Opening Door	—	—	MED301RWS	—	—
Key Features					
Modes	(11) Bake, Variable Broil (hi & low), Roast, Warm, Proof Dough, Convection Bake, Convection Broil, Convection Roast, Pizza, True Convection, Fast Preheat	(17) Bake, Broil, Roast, Convection Bake, Convection Broil, Convection Roast, Proof, Warm, Pizza, True Convection, Dehydrate, Speed Convection, Slow Roast, Steam, Steam Convection, Defrost, Reheat, Steam Programs	(16) Bake, Broil, Max Broil, Roast, Convection Bake, Convection Broil, Max Convection Broil, Convection Roast, Proof, Warm, Pizza, True Convection, Dehydrate, Speed Convection, Slow Roast, Rotisserie	(13) Bake, Broil, Roast, Convection Bake, Convection Broil, Convection Roast, Proof, Warm, Pizza, True Convection, Dehydrate, Speed Convection, Slow Roast	36 CookSmart® Auto Programs (Including True Convection, Hi & Lo Broil, Keep Warm, Frozen Foods) + 10 levels of Microwaveable Power
Star-K Certified	Yes	Yes	Yes	Yes	No
Cleaning Type	Self Clean	Easy Clean, Ecolytic Clean	Self Clean, Easy Clean	Self Clean, Easy Clean	N/A
Thermador® Connected Experience by Home Connect® (Wi-Fi Enabled)	Yes	Yes	Yes	Yes	No
General Properties					
Oven Cavity Size	4.6 cu. ft.	2.8 cu. ft.	4.5 cu. ft.	4.5 cu. ft.	1.6 cu. ft.
Telescopic Rack(s)	1	3	3	1	N/A
Meat Probe	No	Multi-point	Multi-point	Yes	No
Illumination Type	Halogen	LED	Halogen	Halogen	LED
Interior Lights	2	3	2	2	1
SoftClose® Door	Yes	Yes	Yes	Yes	No
Dimensions					
Overall Appliance Dimensions (HxWxD) (in)	29" x 29 3/4" x 24 1/2"	25 13/16" x 29 3/4" x 23 7/16"	29" x 29 3/4" x 24 1/2"	29" x 29 3/4" x 24 1/2"	19 5/8" x 29 3/4" x 22 3/8"
Required Cutout Size (HxWxD) (in) – Standard	27"– 28 5/8" x 28 1/2" x 23 1/2"	24 1/2"– 25 7/16" x 28 1/2" x 23 1/2"	27"– 28 5/8" x 28 1/2" x 23 1/2"	27"– 28 5/8" x 28 1/2" x 23 1/2"	19 1/4" x 28 1/2" x 22"
Required Cutout Size (HxWxD) (in) – Flush	29 1/8" x 30" x 24 1/2"	25 15/16" x 30" x 24 1/2"	29 1/8" x 30" x 24 1/2"	29 1/8" x 30" x 24 1/2"	20 1/8" x 30" x 23 1/2"

Visit Thermador.com for complete specifications or text a Thermador model number to 21432 to have specs sent to your phone

COMBINATION BUILT-IN OVENS QUICK REFERENCE CHART

Professional

	30-Inch Double with Steam Convection	30-Inch Triple with Speed Oven & Warming Drawer	30-Inch Double with Speed Oven	30-Inch Double with Microwave
= Steam Oven	PODS302W	PODMCW31W	PODMC301W	POM301W
Key Features				
Modes – Upper Cavity	(17) Bake, Broil, Roast, Convection Bake, Convection Broil, Convection Roast, Steam Convection, Defrost, Proof, Warm, Pizza, True Convection, Dehydrate, Speed Convection, Slow Roast, Steam, Reheat, Steam Auto Programs	36 CookSmart® Auto Programs (including True Convection, Speed Convection, Broil, Convection Broil, Keep Warm) and Heating Programs and Microwave Programs	36 CookSmart® Auto Programs (including True Convection, Speed Convection, Broil, Convection Broil, Heating Programs, Keep Warm) and Microwave Programs	(9) Baked Potato, Sweet Potato, Fresh Vegetable, Frozen Vegetable, Ground Meat, Fish / Seafood, Brown Rice, White Rice, Frozen Entrees
Modes – Lower Cavity	(16) Bake, Broil, Max Broil, Roast, Convection Bake, Convection Broil, Max Convection Broil, Convection Roast, Proof, Warm, Pizza, True Convection, Dehydrate, Speed Convection, Slow Roast, Rotisserie	(16) Bake, Broil, Max Broil, Roast, Convection Bake, Convection Broil, Max Convection Broil, Convection Roast, Proof, Warm, Pizza, True Convection, Dehydrate, Speed Convection, Slow Roast, Rotisserie	(16) Bake, Broil, Max Broil, Roast, Convection Bake, Convection Broil, Max Convection Broil, Convection Roast, Proof, Warm, Pizza, True Convection, Dehydrate, Speed Convection, Slow Roast, Rotisserie	(13) Bake, Broil, Roast, Convection Bake, Convection Broil, Convection Roast, Proof, Warm, Pizza, True Convection, Dehydrate, Speed Convection, Slow Roast
Star-K Certified	Yes	Yes	Yes	Yes
Warming Drawer	No	Yes	No	No
Cleaning Type – Upper Cavity	Easy Clean, Ecolytic Clean	N/A	N/A	N/A
Cleaning Type – Lower Cavity	Easy Clean, Self Clean	Easy Clean, Self Clean	Easy Clean, Self Clean	Easy Clean, Self Clean
General Properties				
Speed Oven Capacity	N/A	1.6 cu. ft.	1.6 cu. ft.	N/A
Microwave Capacity	N/A	N/A	N/A	1.6 cu. ft.
Steam Convection Oven Capacity	2.8 cu. ft.	N/A	N/A	N/A
Oven Capacity	4.5 cu. ft.	4.5 cu. ft.	4.5 cu. ft.	4.5 cu. ft.
Warming Drawer Capacity	N/A	2.5 cu. ft.	N/A	N/A
Telescopic Racks	6	3	3	1
Meat Probe	Multi-point	Multi-point	Multi-point	Yes
Illumination Type – Upper / Lower Cavity	LED / Halogen	LED / Halogen	LED / Halogen	LED / Halogen
Interior Lights – Upper / Lower Cavity	3 – 1 Top, 2-Sides 2 – Sides with 2 Bulbs Each	1 / 2	1 / 2	1 / 2
Thermador® Connected Experience by Home Connect® (Wi-Fi Enabled)	Yes, Upper & Lower	Yes, Lower Oven Only	Yes, Lower Oven Only	Yes, Lower Oven Only
Speed Oven / Microwave Power	N/A	1,000 W	1,000 W	950 W
Dimensions				
Overall Appliance Dimensions (HxWxD) (in)	48 7/8" 29 3/4" x 24 1/2"	61 3/16" x 29 3/4" x 24 1/2"	49" x 29 3/4" x 24 1/2"	49" x 29 3/4" x 24 1/2"
Required Cutout Size (HxWxD) (in) – Standard	47 3/8"–48 1/8" x 28 1/2" x 23 1/2"	60 3/4" x 28 1/2" x 23 1/2"	48 1/2" x 28 1/2" x 23 1/2"	48 1/2" x 28 1/2" x 23 1/2"
Required Cutout Size (HxWxD) (in) – Flush	49" x 30" x 24 1/2"	61 5/16" x 30" x 24 1/2"	49 1/8" x 30" x 24 1/2"	49 1/8" x 30" x 24 1/2"

Visit Thermador.com for complete specifications or text a Thermador model number to 21432 to have specs sent to your phone

COMBINATION BUILT-IN OVENS QUICK REFERENCE CHART

Masterpiece®

	30-Inch Double with Steam Convection	30-Inch Triple with Speed Oven & Warming Drawer	30-Inch Double with Speed Oven	30-Inch Double with Microwave
	MEDS302WS	MEDMCW31WS	MEDMC301WS	MEM301WS
Key Features				
Modes – Upper Cavity	(17) Bake, Broil, Roast, Convection Bake, Convection Broil, Convection Roast, Steam Convection, Defrost, Proof, Warm, Pizza, True Convection, Dehydrate, Speed Convection, Slow Roast, Steam, Reheat, Steam Auto Programs	36 CookSmart® Auto Programs (including True Convection, Speed Convection, Broil, Convection Broil, Keep Warm) and Heating Programs and Microwave Programs	36 CookSmart® Auto Programs (including True Convection, Speed Convection, Broil, Convection Broil, Heating Programs, Keep Warm) and Microwave Programs	(9) Baked Potato, Sweet Potato, Fresh Vegetable, Frozen Vegetable, Ground Meat, Fish / Seafood, Brown Rice, White Rice, Frozen Entrees
Modes – Lower Cavity	(16) Bake, Broil, Max Broil, Roast, Convection Bake, Convection Broil, Max Convection Broil, Convection Roast, Proof, Warm, Pizza, True Convection, Dehydrate, Speed Convection, Slow Roast, Rotisserie	(16) Bake, Broil, Max Broil, Roast, Convection Bake, Convection Broil, Max Convection Broil, Convection Roast, Proof, Warm, Pizza, True Convection, Dehydrate, Speed Convection, Slow Roast, Rotisserie	(16) Bake, Broil, Max Broil, Roast, Convection Bake, Convection Broil, Max Convection Broil, Convection Roast, Proof, Warm, Pizza, True Convection, Dehydrate, Speed Convection, Slow Roast, Rotisserie	(13) Bake, Broil, Roast, Convection Bake, Convection Broil, Convection Roast, Proof, Warm, Pizza, True Convection, Dehydrate, Speed Convection, Slow Roast
Star-K Certified	Yes	Yes	Yes	Yes
Warming Drawer	No	Yes	No	No
Cleaning Type – Upper Cavity	Easy Clean, Ecolytic Clean	N/A	N/A	N/A
Cleaning Type – Lower Cavity	Easy Clean, Self Clean	Easy Clean, Self Clean	Easy Clean, Self Clean	Easy Clean, Self Clean
General Properties				
Speed Oven Capacity	N/A	1.6 cu. ft.	1.6 cu. ft.	N/A
Microwave Capacity	N/A	N/A	N/A	1.6 cu. ft.
Steam Convection Oven Capacity	2.8 cu. ft.	N/A	N/A	N/A
Oven Capacity	4.5 cu. ft.	4.5 cu. ft.	4.5 cu. ft.	4.5 cu. ft.
Warming Drawer Capacity	N/A	2.5 cu. ft.	N/A	N/A
Telescopic Racks	6	3	3	1
Meat Probe	Multi-point	Multi-point	Multi-point	Yes
Illumination Type – Upper / Lower Cavity	LED / Halogen	LED / Halogen	LED / Halogen	LED / Halogen
Interior Lights – Upper / Lower Cavity	3 – 1 Top, 2-Sides 2 – Sides with 2 Bulbs Each	1 / 2	1 / 2	1 / 2
Thermador® Connected Experience by Home Connect® (Wi-Fi Enabled)	Yes, Upper & Lower	Yes, Lower Oven Only	Yes, Lower Oven Only	Yes, Lower Oven Only
Speed Oven / Microwave Power	N/A	1,000 W	1,000 W	950 W
Dimensions				
Overall Appliance Dimensions (HxWxD) (in)	48 7/8" x 29 3/4" x 24 1/2"	61 3/16" x 29 3/4" x 24 1/2"	49" x 29 3/4" x 24 1/2"	49" x 29 3/4" x 24 1/2"
Required Cutout Size (HxWxD) (in) – Standard	47 3/8"–48 1/8" x 28 1/2" x 23 1/2"	60 3/4" x 28 1/2" x 23 1/2"	48 1/2" x 28 1/2" x 23 1/2"	48 1/2" x 28 1/2" x 23 1/2"
Required Cutout Size (HxWxD) (in) – Flush	49" x 30" x 24 1/2"	61 5/16" x 30" x 24 1/2"	49 1/8" x 30" x 24 1/2"	49 1/8" x 30" x 24 1/2"

Visit Thermador.com for complete specifications or text a Thermador model number to 21432 to have specs sent to your phone

DOUBLE BUILT-IN OVENS QUICK REFERENCE CHART

	Professional	
	30-Inch Double	30-Inch Double
Drop-Down Door	POD302W	PO302W
Left Side Opening Door	POD302LW	—
Right Side Opening Door	POD302RW	—
Key Features		
Modes – Upper Cavity	(16) Bake, Broil, Max Broil, Roast, Convection Bake, Convection Broil, Max Convection Broil, Convection Roast, Proof, Warm, Pizza, True Convection, Dehydrate, Speed Convection, Slow Roast, Rotisserie	(13) Bake, Broil, Roast, Convection Bake, Convection Broil, Convection Roast, Proof, Warm, Pizza, True Convection, Dehydrate, Speed Convection, Slow Roast
Modes – Lower Cavity	(13) Bake, Broil, Roast, Convection Bake, Convection Broil, Convection Roast, Proof, Warm, Pizza, True Convection, Dehydrate, Speed Convection, Slow Roast	(13) Bake, Broil, Roast, Convection Bake, Convection Broil, Convection Roast, Proof, Warm, Pizza, True Convection, Dehydrate, Speed Convection, Slow Roast
Star-K Certified	Yes	Yes
Cleaning Type – Upper and Lower Cavity	Easy Clean, Self Clean	Easy Clean, Self Clean
Thermador® Connected Experience by Home Connect® (Wi-Fi Enabled)	Yes	Yes
General Properties		
Oven Cavity Size – Upper / Lower Cavity (cu. ft.)	4.5 cu. ft. / 4.5 cu. ft.	4.5 cu. ft. / 4.5 cu. ft.
Telescopic Racks	4	2
Meat Probe	Multi-point	Yes
Illumination Type – Upper & Lower Cavity	Halogen	Halogen
Interior Lights – Upper Cavity	2	2
Interior Lights – Lower Cavity	2	2
SoftClose® Doors	Yes	Yes
Dimensions		
Overall Appliance Dimensions (HxWxD) (in)	52 1/16" x 29 3/4" x 24 1/2"	52 1/16" x 29 3/4" x 24 1/2"
Required Cutout Size (HxWxD) (in) – Standard	50"–51 1/2" x 28 1/2" x 23 1/2"	50"–51 1/2" x 28 1/2" x 23 1/2"
Required Cutout Size (HxWxD) (in) – Flush	52 3/16" x 30" x 24 1/2"	52 3/16" x 30" x 24 1/2"

Visit Thermador.com for complete specifications or text a Thermador model number to 21432 to have specs sent to your phone

DOUBLE BUILT-IN OVENS QUICK REFERENCE CHART

	Masterpiece®		
	30-Inch Double Masterpiece with Professional Handle	30-Inch Double	30-Inch Double
Drop-Down Door	ME302YP	MED302WS	ME302WS
Left Side Opening Door	—	MED302LWS	—
Right Side Opening Door	—	MED302RWS	—
Key Features			
Modes – Upper Cavity	(11) Bake, Variable Broil (hi & low), Roast, Warm, Proof Dough, Convection Bake, Convection Broil, Convection Roast, Pizza, True Convection, Fast Preheat	(16) Bake, Broil, Max Broil, Roast, Convection Bake, Convection Broil, Max Convection Broil, Convection Roast, Proof, Warm, Pizza, True Convection, Dehydrate, Speed Convection, Slow Roast, Rotisserie	(13) Bake, Broil, Roast, Convection Bake, Convection Broil, Convection Roast, Proof, Warm, Pizza, True Convection, Dehydrate, Speed Convection, Slow Roast
Modes – Lower Cavity	(5) Bake, Variable Broil (hi & low), Roast, Warm, Sabbath	(13) Bake, Broil, Roast, Convection Bake, Convection Broil, Convection Roast, Proof, Warm, Pizza, True Convection, Dehydrate, Speed Convection, Slow Roast	(13) Bake, Broil, Roast, Convection Bake, Convection Broil, Convection Roast, Proof, Warm, Pizza, True Convection, Dehydrate, Speed Convection, Slow Roast
Star-K Certified	Yes	Yes	Yes
Cleaning Type – Upper and Lower Cavity	Self Clean	Easy Clean, Self Clean	Easy Clean, Self Clean
Thermador® Connected Experience by Home Connect® (Wi-Fi Enabled)	Yes	Yes	Yes
General Properties			
Oven Cavity Size (cu. ft.)	4.6 cu. ft. / 4.6 cu. ft.	4.5 cu. ft. / 4.5 cu. ft.	4.5 cu. ft. / 4.5 cu. ft.
Telescopic Rack(s)	1	4	2
Meat Probe	No	Multi-point	Yes
Illumination Type – Upper & Lower Cavity	Halogen	Halogen	Halogen
Interior Lights – Upper Cavity	2	2	2
Interior Lights – Lower Cavity	2	2	2
SoftClose® Doors	Yes	Yes	Yes
Dimensions			
Overall Appliance Dimensions (HxWxD) (in)	52 1/16" x 29 3/4" x 24 1/2"	52 1/16" x 29 3/4" x 24 1/2"	52 1/16" x 29 3/4" x 24 1/2"
Required Cutout Size (HxWxD) (in) – Standard	49 3/4" – 51 1/2" x 28 1/2" x 23 1/2"	50"–51 1/2" x 28 1/2" x 23 1/2"	50"–51 1/2" x 28 1/2" x 23 1/2"
Required Cutout Size (HxWxD) (in) – Flush	52 3/16" x 30" x 24 1/2"	52 3/16" x 30" x 24 1/2"	52 3/16" x 30" x 24 1/2"

Visit Thermador.com for complete specifications or text a Thermador model number to 21432 to have specs sent to your phone

PLANNING INFORMATION

Built-In Ovens

Model Options

There are two Thermador Built-in Oven collections to choose from—Professional and Masterpiece®. Each collection features a distinctive style. Be sure to reference the correct model information in this design guide.

Installation Considerations

The information in this design guide provides key features, product dimensions, cutouts and installation specifications. Before installing a Thermador Oven, be sure to verify the cabinet dimensions and electrical connections. Installation instructions are subject to change. Always consult with the installation manual included with the product for complete details prior to the installation.

Important

When a Thermador Oven is installed at the end of a cabinet run, adjacent to a perpendicular wall or cabinet door, it is good practice to allow at least **1/4**" (6.4 mm) space between the side of the oven and the wall or door.

When installing a side hinge oven, leave a minimum 10" (254 mm) clearance to allow the door to open.

Minimum Cabinet Base Support Weights

Single Ovens	232 lbs (105 kg)
Single Ovens with Steam and Convection	232 lbs. (105 kg)
Speed Ovens	142 lbs. (64.1 kg)
Double Ovens	429 lbs. (195 kg)
Double Combination Ovens with Steam and Convection Oven	429 lbs. (195 kg)
Double Combination Oven with Microwave or Speed Oven	322 lbs. (146 kg)
Triple Combination Oven with Speed Oven and Warming Drawer	429 lbs. (195 kg)

For oven support, install 2 x 4's extending front to back flush with the bottom and the side of the opening. The supporting base must be well secured to the floor / cabinet, flat / level and capable of supporting at least the weights listed in the chart below.

Electrical Location and Specifications

Refer to the appropriate installation diagram for details on conduit box location. Be sure your appliance is properly installed and grounded by a qualified technician. Installation, electrical connections and grounding must comply with all applicable local codes.

All built-in ovens below are dual rated, designed to be connected to either 240V / 208V AC, 60 Hz, 4-wire, single-phase power supply. Install a suitable conduit box (not furnished). An appropriately-sized, UL-listed conduit connector must be used to correctly attach the conduit to the junction box.

Required Circuit Breaker 208 / 240V

Single Ovens	30 Amp
Single Ovens with Steam and Convection	20 Amp
Speed Ovens	16 Amp
Double Ovens	40 Amp
Double Combination Ovens with Steam and Convection Oven	40 / 50 Amp
Double Combination Oven with Microwave or Speed Oven	40 / 50 Amp
Triple Combination Oven with Speed Oven and Warming Drawer	40 / 50 Amp

Important

Local Codes may vary; installation, electrical connections and grounding must comply with all applicable local codes. If local codes permit grounding through the electrical supply neutral, connect both the white neutral wire and the bare ground wire from the oven to the white neutral electrical supply wire.

Built-In Oven Optional Accessories

00577552 Cooking Pan – Half Size, 1 **5/8**" D

00577553 Perforated Cooking Pan – Half Size, 1 **5/8**" D

11027159 Cooking Pan – Full Size, 1 **5/8**" D

00577551 Perforated Cooking Pan – Full Size, 1 **5/8**" D

00741839 Baking Tray – Full Size, 1 **1/8**" D

11024904 Lg (Max Broil) Broiler Grill Set (2), 14 **5/16**" x 8 **9/16**"

00484628 Broiler Pan, 16 **7/16**" x 12 **5/8**" x 1 **1/2**" D

11024903 Lg (Max Broil) Broiler Pan, 18 **5/16**" x 14 **3/4**" x 1 **5/8**" D

11014338 Universal Pan – Extra Large, 17 **15/16**" x 14 **3/4**" x 1 **1/2**" D

11013689 Broiler Grill, 15 **1/4**" x 12 **7/8**"

00777111 Wire Rack for Steam Oven, 17 **15/16**" x 14 **3/4**"

WKNOBKT3W Blue Knob Kit (2 Piece) for Professional Collection Ovens

12022200 Multi-point Meat Probe

00623653 Sponge

INSTALLATION

Single Built-In Ovens

Standard Wall-Mounted Installation

30-Inch Single Oven – All Hinge Configurations

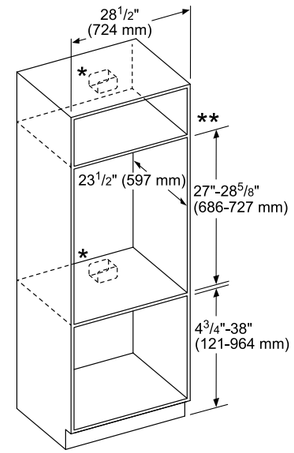

* For single ovens installed into a wall cabinet, the junction box may be located above, beneath, left or right of the unit within reach of the power cord.

** For oven installation in a wall cabinet, the control panel overlap is a min. 3/8" (10 mm) to max. 2" (51 mm).

measurements in inches (mm)

Standard Under-Counter Installation

30-Inch Single Oven – All Hinge Configurations

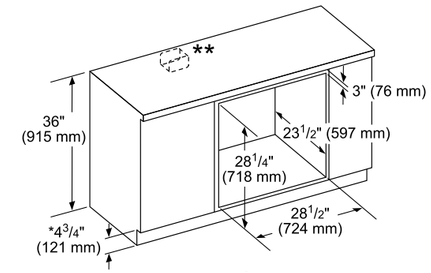

* Includes 3/4" (19 mm) base plate.

** For single ovens installed under a cabinet, the junction box should be located to the right or left of the unit within reach of the power cord.

measurements in inches (mm)

Product Dimensions

30-Inch Single Oven – Bottom Hinge – Professional and Masterpiece

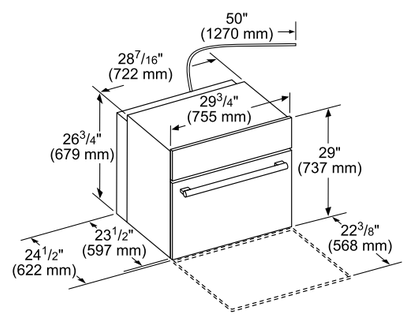

measurements in inches (mm)

Door Handle Depth*

Masterpiece Series Handle

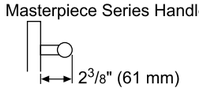

Professional Series Handle

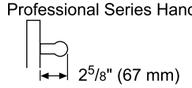

***Protrusion of handle from door skin**

Product Dimensions

ME301YP 30-Inch Single Oven – Bottom Hinge – Masterpiece with Professional Handle

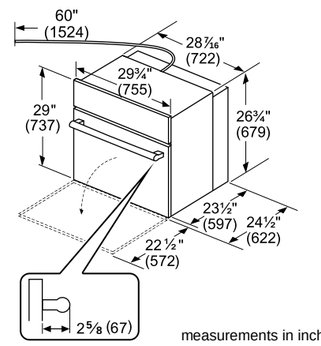

measurements in inches (mm)

Flush Installation

30-Inch Single Oven – Bottom Hinge – Professional, Masterpiece and Masterpiece with Professional Handle

Top View

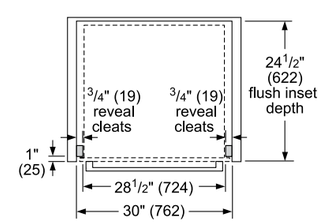

measurements in inches (mm)

Side View

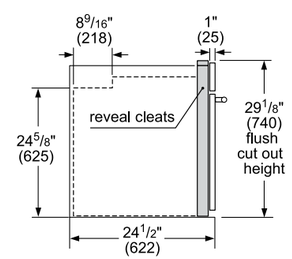

Visit Thermador.com for complete specifications or text a Thermador model number to 21432 to have specs sent to your phone

INSTALLATION

Single Built-In Ovens

Product Dimensions

30-Inch Single Oven – Left Hinge

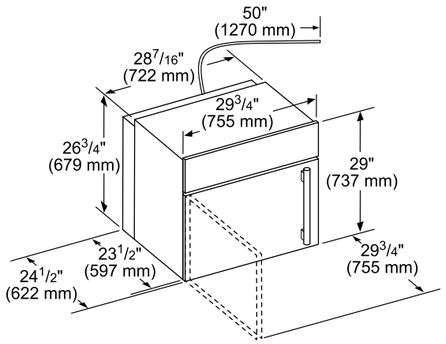

measurements in inches (mm)

Product Dimensions

30-Inch Single Oven – Right Hinge

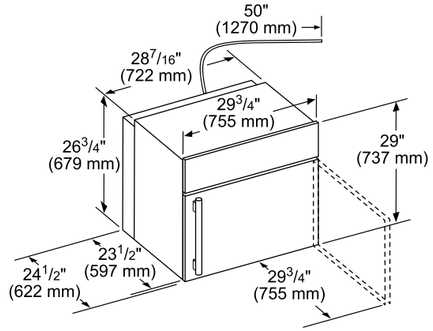

measurements in inches (mm)

Flush Installation

30-Inch Single Oven – Left Hinge

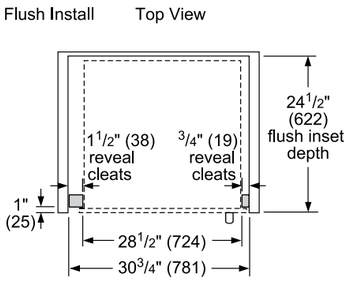

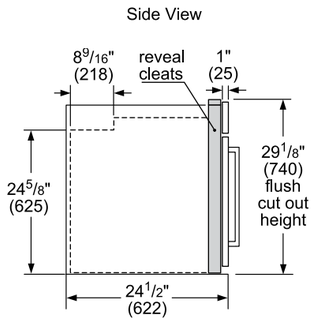

measurements in inches (mm)

Door Handle Depth*

Masterpiece Series
Side-Hinge Handle

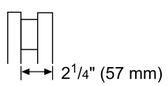

Professional Series
Side-Hinge Handle

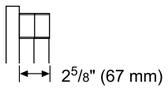

***Protrusion of handle from door skin**

Flush Installation

30-Inch Single Oven – Right Hinge

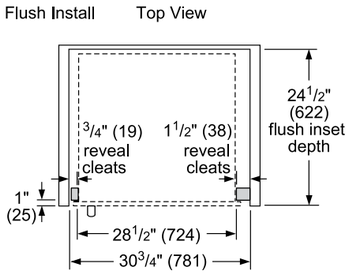

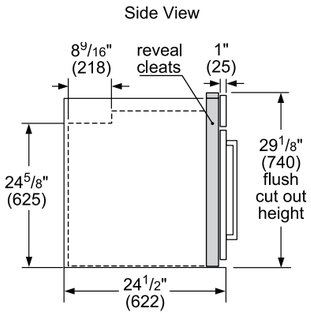

measurements in inches (mm)

INSTALLATION

Steam & Convection Single Built-In Ovens

Product Dimensions

30-Inch Steam & Convection Oven

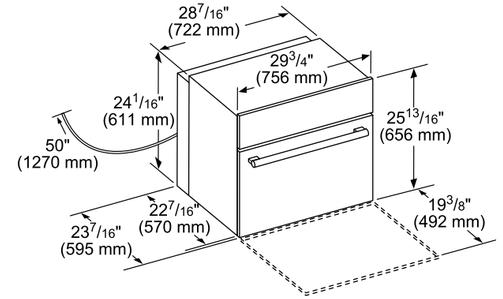

measurements in inches (mm)

Door Handle Depth*

Professional Series Handle

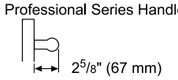

Masterpiece Series Handle

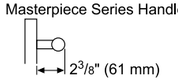

***Protrusion of handle from door skin**

Standard Wall-Mounted Installation

30-Inch Steam & Convection Oven

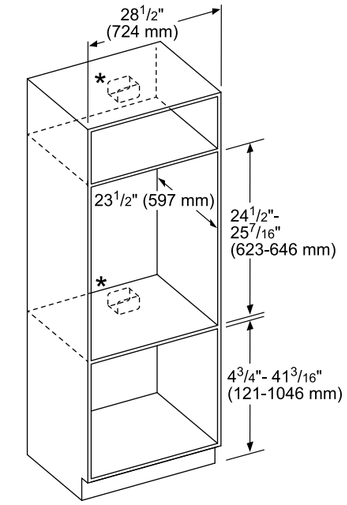

* For single ovens installed into a wall cabinet, the junction box may be located above, beneath left or right of the unit within range of the power cord.

measurements in inches (mm)

Standard Under-Counter Installation

30-Inch Steam & Convection Oven

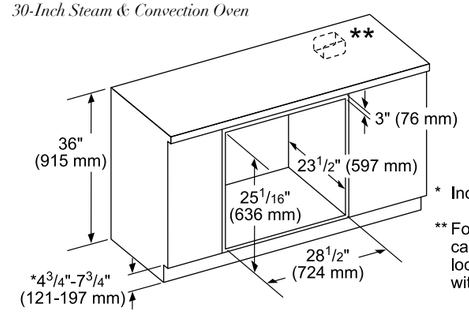

* Includes 3/4" (19 mm) base plate.

** For single ovens installed under a cabinet, the junction box should be located to the right or left of the unit within reach of the power cord.

measurements in inches (mm)

Flush Installation

30-Inch Steam & Convection Oven

Top view

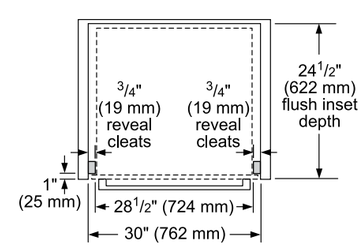

Side view

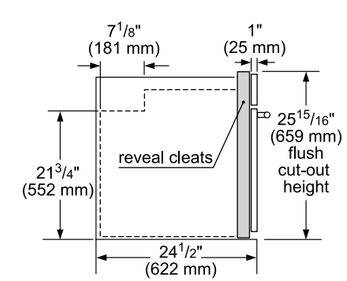

measurements in inches (mm)

Visit Thermador.com for complete specifications or text a Thermador model number to 21432 to have specs sent to your phone

INSTALLATION

Built-In Speed Ovens

Product Dimensions

30-Inch Speed Oven

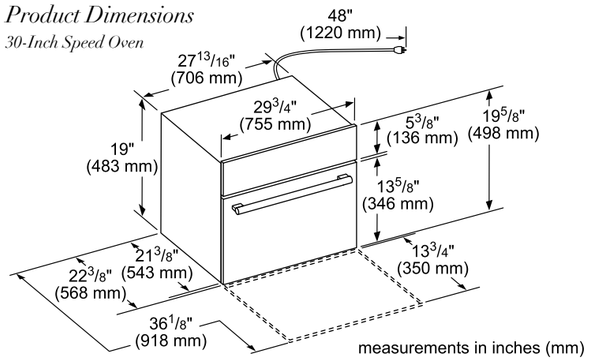

Standard Wall-Mounted Installation

30-Inch Speed Oven

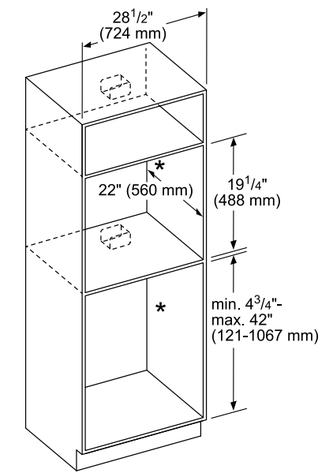

* Receptacle may be located above or beneath the unit within reach of the power cord.

measurements in inches (mm)

Standard Under-Counter Installation

30-Inch Speed Oven

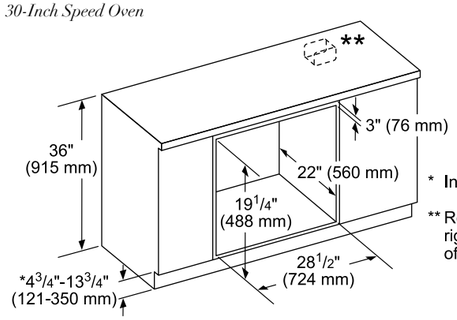

* Includes 3/4" (19 mm) base plate

** Receptacle may be located left or right of the unit, within reach of the power cord.

Measurements in inches (mm)

Door Handle Depth*

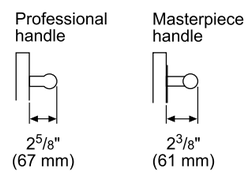

***Protrusion of handle from door skin**

Flush Installation

30-Inch Speed Oven

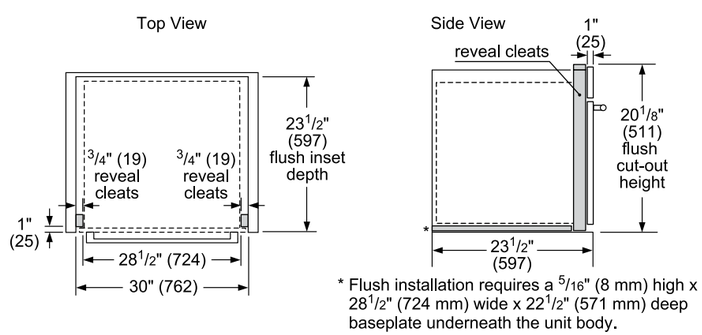

* Flush installation requires a 5/16" (8 mm) high x 28 1/2" (724 mm) wide x 22 1/2" (571 mm) deep baseplate underneath the unit body.

measurements in inches (mm)

Visit Thermador.com for complete specifications or text a Thermador model number to 21432 to have specs sent to your phone

INSTALLATION

Double Built-In Ovens

Standard Installation

30-Inch Double Oven – All Hinge Configurations – Professional and Masterpiece

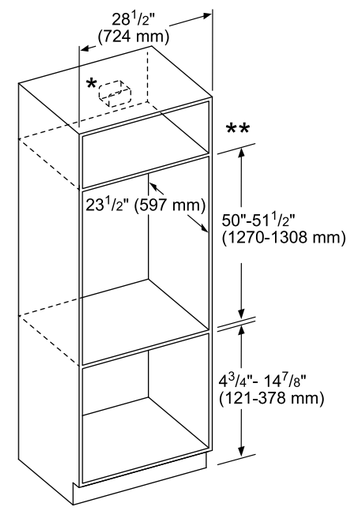

* For double ovens installed into a wall cabinet, the junction box may be located above or beneath the unit within reach of the power cord.

**For oven installation in a wall cabinet, the control panel overlap is a min. 3/8" (10 mm) to max. 1 1/4" (25 mm).

measurements in inches (mm)

Door Handle Depth*

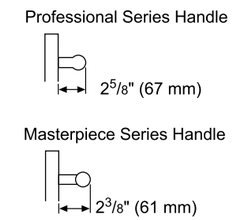

***Protrusion of handle from door skin**

Product Dimensions

30-Inch Double Oven – Bottom Hinge – Professional and Masterpiece

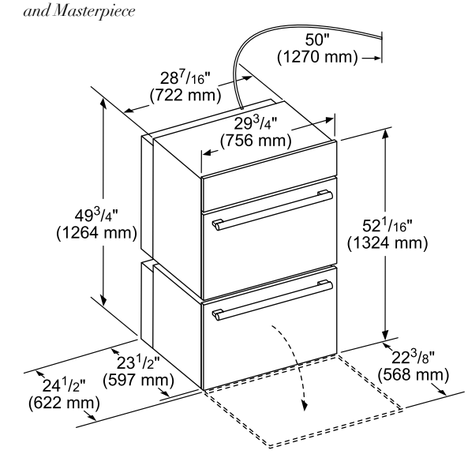

measurements in inches (mm)

Flush Installation

30-Inch Double Oven – All Hinge Configurations – Professional and Masterpiece

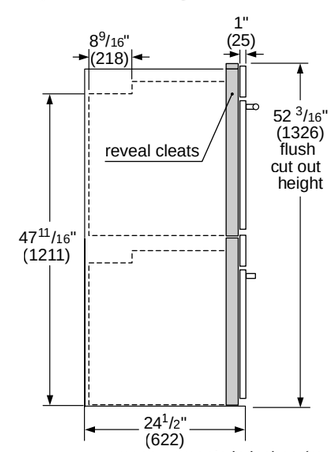

measurements in inches (mm)

Flush Installation

30-Inch Double Oven – Bottom Hinge – Professional and Masterpiece

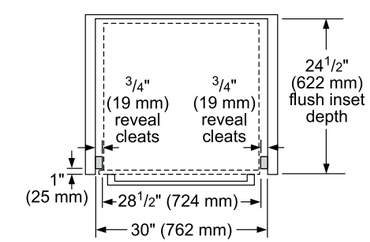

measurements in inches (mm)

Visit Thermador.com for complete specifications or text a Thermador model number to 21432 to have specs sent to your phone

INSTALLATION

Double Built-In Ovens

Standard Installation

ME302YP 30-Inch Double Oven – Bottom Hinge – Masterpiece with Professional Handle

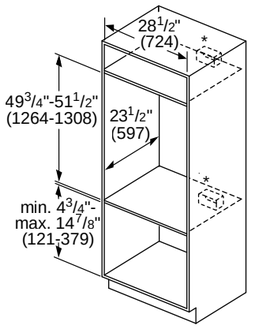

* Junction box may be installed above, below, or to the left or right of the unit within range of the power conduit.

measurements in inches (mm)

Product Dimensions

ME302YP 30-Inch Double Oven – Bottom Hinge – Masterpiece with Professional Handle

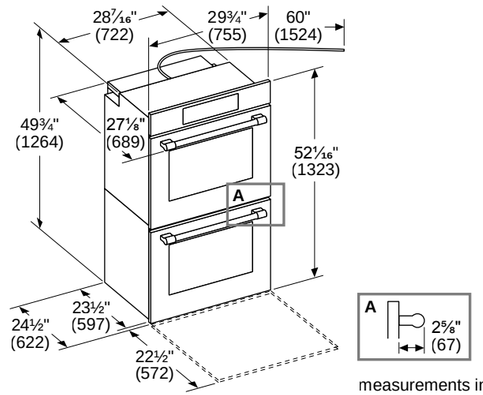

measurements in inches (mm)

Flush Installation

ME302YP 30-Inch Double Oven – Bottom Hinge – Masterpiece with Professional Handle

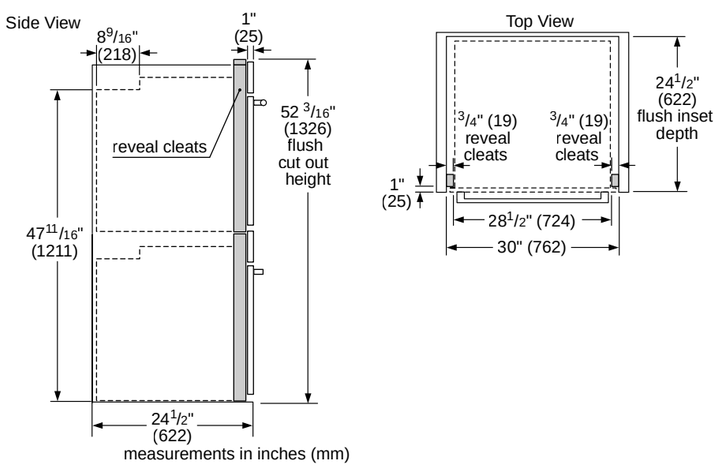

measurements in inches (mm)

Visit Thermador.com for complete specifications or text a Thermador model number to 21432 to have specs sent to your phone

INSTALLATION

Double Built-In Ovens

Product Dimensions

30-Inch Double Oven – Left Hinge

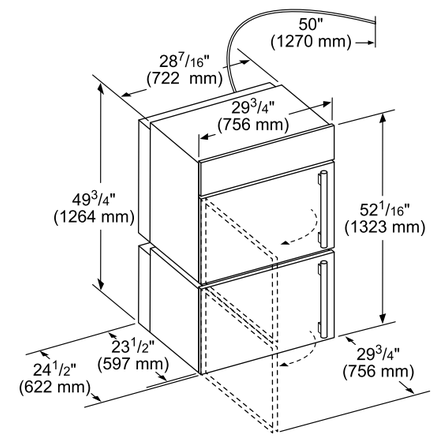

measurements in inches (mm)

Product Dimensions

30-Inch Double Oven – Right Hinge

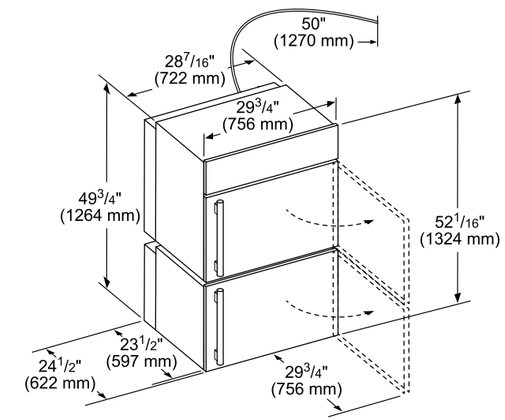

measurements in inches (mm)

Door Handle Depth*

Professional Series Side-Hinge Handle

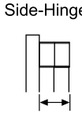

2 5/8" (67 mm)

Masterpiece Series Side-Hinge Handle

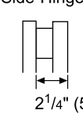

2 1/4" (57 mm)

***Protrusion of handle from door skin**

Flush Installation

30-Inch Double Oven – Left Hinge

Top View Left Hinger Door

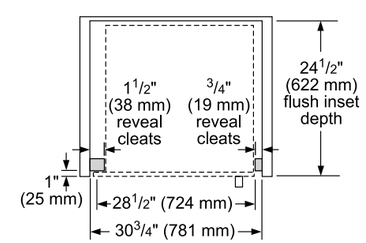

measurements in inches (mm)

Flush Installation

30-Inch Double Oven – Right Hinge

Top View Right Hinge Door

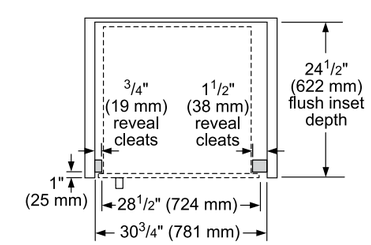

measurements in inches (mm)

Visit Thermador.com for complete specifications or text a Thermador model number to 21432 to have specs sent to your phone

INSTALLATION

Double Combination Built-In Ovens with Steam Convection

Product Dimensions

30-Inch Double Combination Oven with Steam Convection

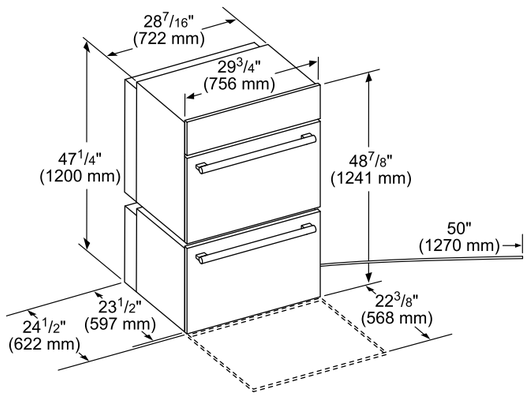

measurements in inches (mm)

Door Handle Depth*

Professional Series Handle

Masterpiece Series Handle

***Protrusion of handle from door skin**

Standard Installation

30-Inch Double Combination Oven with Steam Convection

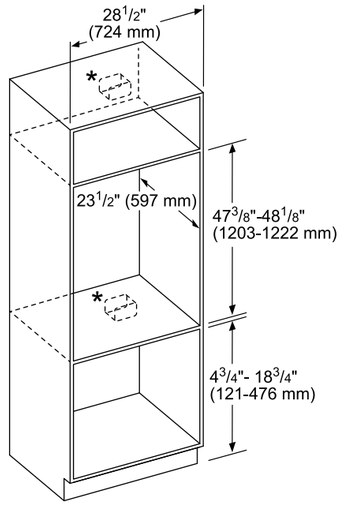

* Junction box may be installed above, beneath, right or left of the unit within reach of the power cord.

measurements in inches (mm)

Flush Installation

30-Inch Double Combination Oven with Steam Convection

Combination Oven with Steam and Convection Oven
Flush Mount Installation
Top View Bottom Hinge Door

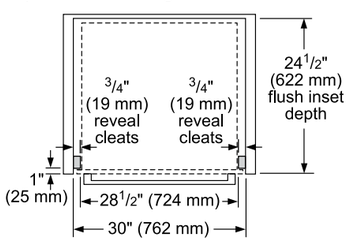

measurements in inches (mm)

Side View-Combination Oven with Steam and Convection Oven

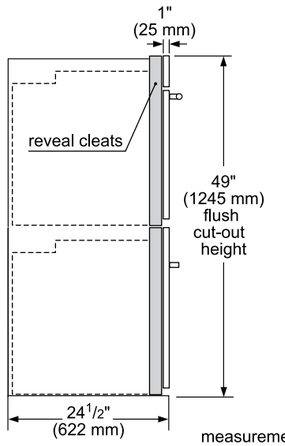

measurements in inches (mm)

Visit Thermador.com for complete specifications or text a Thermador model number to 21432 to have specs sent to your phone

INSTALLATION

Double Combination Built-In Ovens with Microwave or Speed Oven

Product Dimensions

30-Inch Double Combination Oven with Microwave or Speed Oven

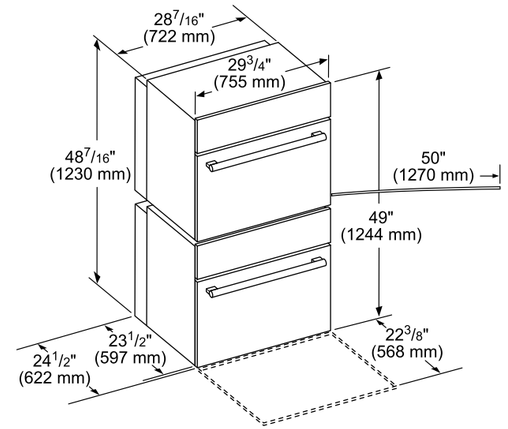

measurements in inches (mm)

Door Handle Depth*

Professional Series Handle

Masterpiece Series Handle

***Protrusion of handle from door skin**

Standard Installation

30-Inch Double Combination Oven with Microwave or Speed Oven

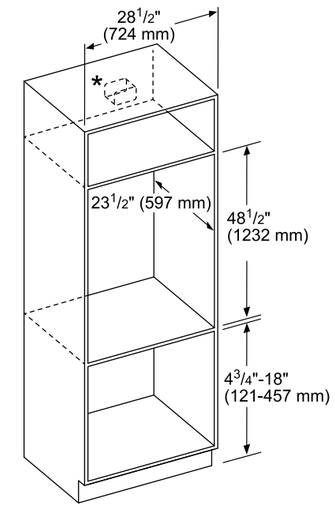

* Junction box may be installed above, beneath, right or left of the unit within range of the power cord.

measurements in inches (mm)

Flush Installation

30-Inch Double Combination Oven with Microwave or Speed Oven

Combination Oven with Microwave or Speed Oven, flush mount installation
Top View Bottom Hinge Door

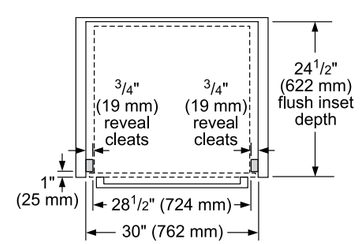

measurements in inches (mm)

Side View-Combination Oven with Microwave or Speed Oven

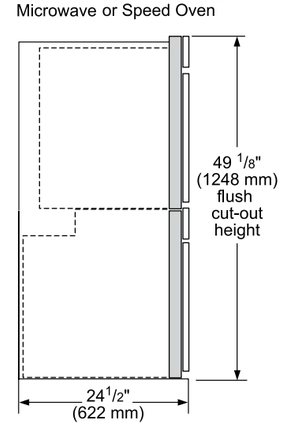

measurements in inches (mm)

Visit Thermador.com for complete specifications or text a Thermador model number to 21432 to have specs sent to your phone

INSTALLATION

Triple Combination Built-In Ovens

Product Dimensions

30-Inch Triple Combination Oven with Speed Oven and Warming Drawer

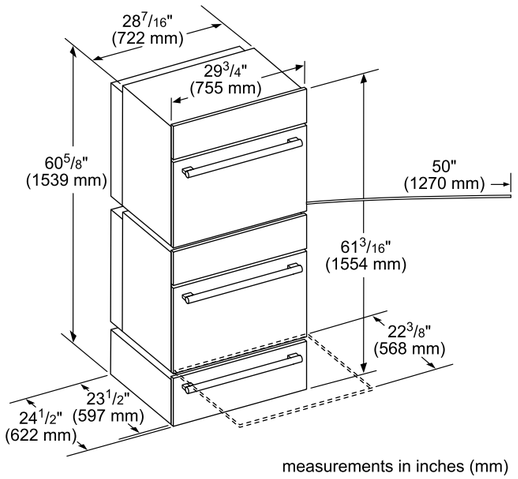

Door Handle Depth*

Professional Series Handle

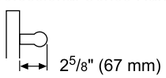

Masterpiece Series Handle

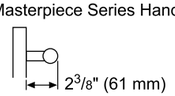

***Protrusion of handle from door skin**

Standard Installation

30-Inch Triple Combination Oven with Speed Oven and Warming Drawer

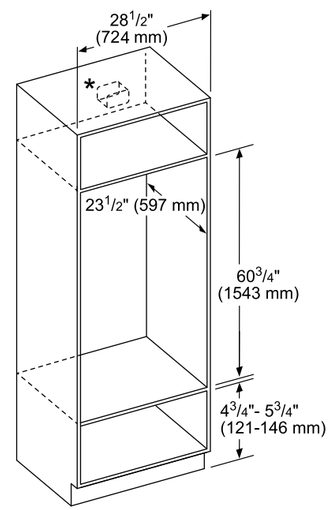

* Junction box may be installed above, right or left of the unit within range of the power cord.

measurements in inches (mm)

Flush Installation

30-Inch Triple Combination Oven with Speed Oven and Warming Drawer

Single Oven with Speed Oven and Warming Drawer, flush mount installation.
Top View Bottom Hinge Door

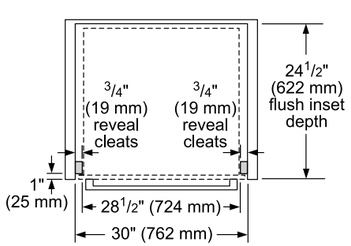

measurements in inches (mm)

Side View-Single Oven with Speed Oven and Warming Drawer

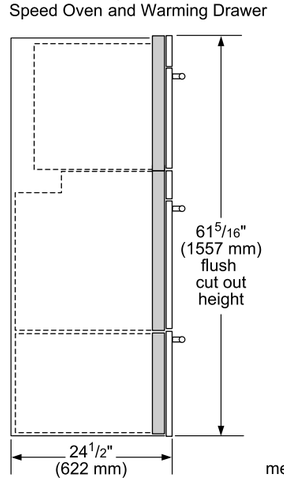

measurements in inches (mm)

Visit Thermador.com for complete specifications or text a Thermador model number to 21432 to have specs sent to your phone

INSTALLATION

Built-In Ovens Combined with Other Products

Side-By-Side Built-In Oven Combination Guide

The following **OVENS** are approved to be installed side-by-side in combination and the installation has been certified by CSA. This guide is only effective with the use of the Thermador built-in oven side-by-side accessory kit TWO30YS. The built-in oven side-by-side accessory kit is required for approved installation.

Built-in Ovens

Conventional Ovens*	Steam Ovens
ME301WS	MEDS301WS
MED301WS	PODS301WS
MED301LWS	MEDS301WS w/SDS30WC
MED301RWS	PODS301WS w/SDS30WC
PO301W	
POD301W	
POD301LW	
POD301RW	

*Conventional ovens with a serial number beginning with "FD009" require accessory kit TWO30YS for side-by-side installation with another oven or in combination with any other approved product. All parts in the kit may not be required. Refer to the Oven Installation Guide for additional information.

The following **OVENS** and **DRAWERS** are approved by BSH Home Appliances Corporation to be installed in combination. These products, identified in the table below, may be installed in combination with other cooking units. The suitability of the combination has not been evaluated by CSA.

Built-in Ovens

Conventional Ovens*	Steam Ovens	Microwave Ovens	Speed Ovens
ME301WS	MEDS301WS	MB30WS	MC30WS
MED301WS	PODS301WS	MB30WP	MC30WP
MED301LWS	MEDS301WS w/SDS30WC	MB30WS w/SD30WC	MC30WS w/SD30WC
MED301RWS	PODS301WS w/SDS30WC	MB30WP w/SD30WC	MC30WP w/SD30WC
PO301W		MB30WS w/WD30WC	MC30WS w/WD30WC
POD301W		MB30WP w/WD30WC	MC30WP w/WD30WC
POD301LW			
POD301RW			

Standard Side-By-Side Installation

30-Inch Conventional Ovens, Speed Ovens, Steam Ovens

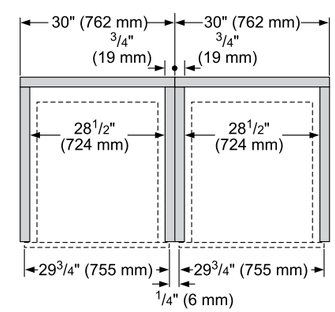

measurements in inches (mm)

IMPORTANT: When installing an oven in combination, a minimum distance between the ovens is required. Refer to the oven installation manual for all other measurements.

Flush Side-By-Side Installation

30-Inch Conventional Ovens, Speed Ovens, Steam Ovens

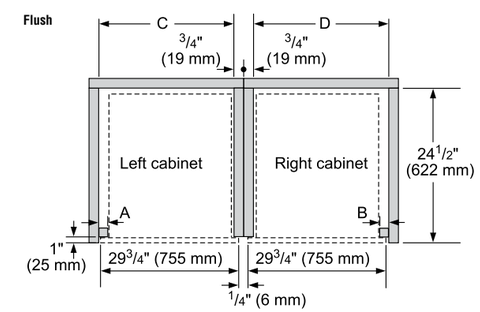

Combination Type	A Left reveal cleat	B Right reveal cleat	C cut-out width	D cut-out width
Flush Bottom hinge	3/4" (19 mm)	3/4" (19 mm)	29 1/4" (743 mm)	29 1/4" (743 mm)
Flush Side Hinge (Left)	1 1/2" (38 mm)	N/A*	30" (762 mm)	N/A*
Flush Side Hinge (Right)	N/A*	1 1/2" (38 mm)	N/A*	30" (762 mm)

*Installation not recommended

measurements in inches (mm)

Visit Thermador.com for complete specifications or text a Thermador model number to 21432 to have specs sent to your phone

INSTALLATION

Built-In Ovens Combined with Other Products

Flush Installation

30-Inch Single or Steam & Convection Oven Over Warming or Storage Drawer

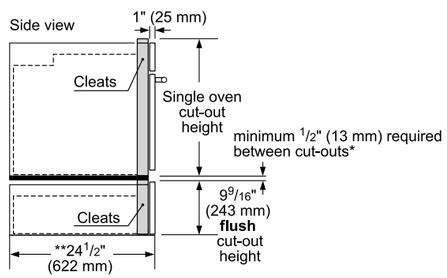

Single wall oven

*IMPORTANT: Base has to be able to support the weight of the oven. Please check oven manual for minimum weight requirements.

Warming drawer

**For WD30W, the installed dimension may differ. This drawing based on a 3/4" (19 mm) thick custom panel.

measurements in inches (mm)

Standard Installation

30-Inch Speed Oven Over Single Oven

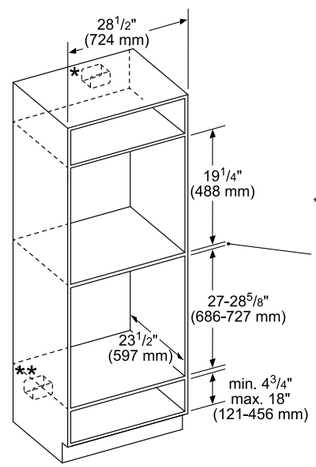

* Junction box may be located above or next to the unit within the reach of the power cable.

**Junction box may be located below (depending on space) or next to the unit within the reach of the power cable.

***Most combinations available as combo oven (one cut-out, one electrical hook-up

Minimum dimension between cut-out:
- 1" (25 mm) for wall oven cut-out height of 28 5/8" (727 mm)
- 2 5/8" (67 mm) for wall oven cut-out height of 27" (686 mm).

measurements in inches (mm)

Flush Installation

30-Inch Speed Oven Over Single Oven

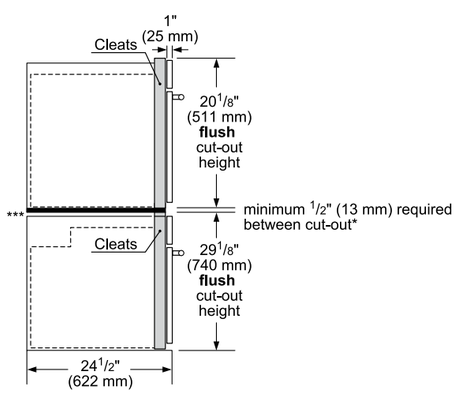

measurements in inches (mm)

*IMPORTANT: Base has to be able to support the weight of the oven. Please check oven manual for minimum weight requirements.

**Most combinations available as combo oven (one cut-out, one electrical hook-up).

***Flush installation requires a base plate underneath the body: 30" products–Dimensions: H 5/16" (8 mm) x W 28 1/2" (724 mm) x D 22 1/2" (571 mm)

Standard Installation

30-Inch Single, Steam & Convection, Double or Combo Oven Over Warming or Storage Drawer

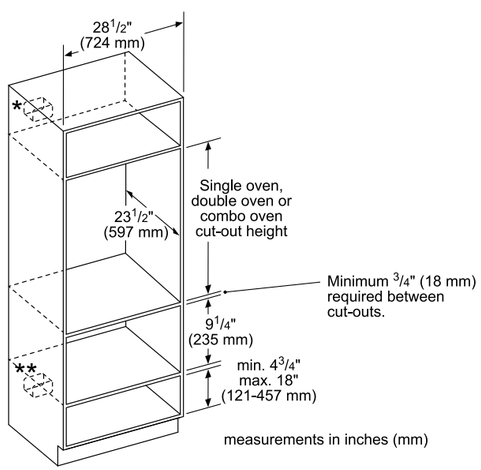

measurements in inches (mm)

* Wall oven junction box may be located ab or to the right or left of the unit within reac or the power cable.

**Electrical hook-up may be located below (depending on space) or next to the draw within reach of the power cable.

INSTALLATION

Built-In Ovens Combined with Other Products

Product Dimensions

30-Inch Steam and Convection Oven with Short Storage Drawer

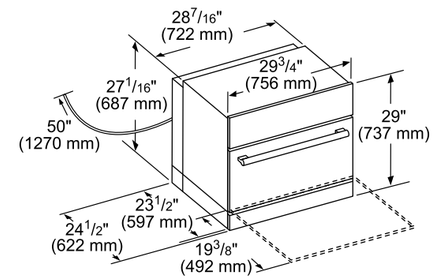

measurements in inches (mm)

Door Handle Depth*

Professional Series Handle

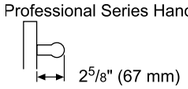

Masterpiece Series Handle

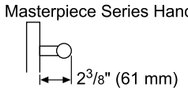

***Protrusion of handle from door skin**

Standard Wall-Mounted Installation

30-Inch Steam & Convection Oven with Short Storage Drawer

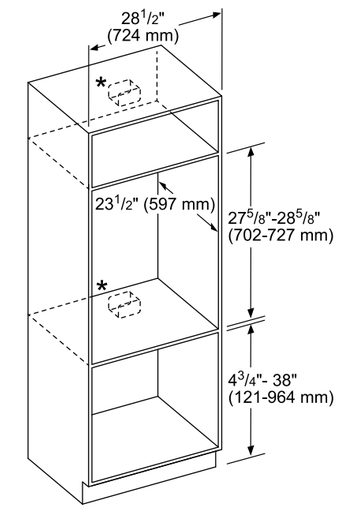

* For single ovens installed into a wall cabinet, the junction box may be located above, beneath, left or right of the unit within reach of the power cord.

Standard Under-Counter Installation

30-Inch Steam & Convection Oven with Short Storage Drawer

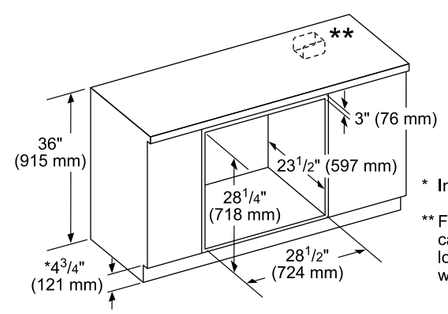

* Includes 3/4" (19 mm) base plate.

** For single ovens installed under a cabinet, the junction box should be located to the right or left of the unit within reach of the power cord.

measurements in inches (mm)

Flush Installation

30-Inch Steam & Convection Oven with Short Storage Drawer

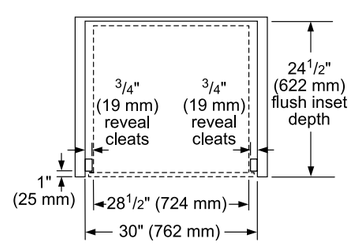

measurements in inches (mm)

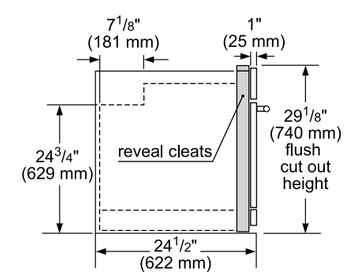

Visit Thermador.com for complete specifications or text a Thermador model number to 21432 to have specs sent to your phone

INSTALLATION

Built-In Ovens Combined with Other Products

Standard Installation

30-Inch Speed Oven Above a Steam & Convection Oven

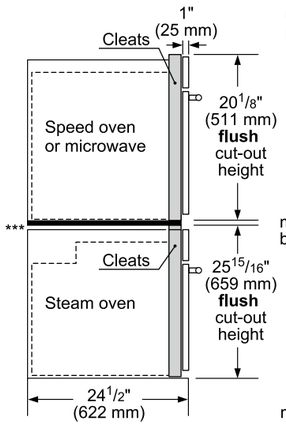

***Flush installation requires a base plate underneath the body: 30" products–Dimensions: H 5/16" (8 mm) x W 28 1/2" (724 mm) x D 22 1/2" (571 mm)

minimum 1/2" (13 mm) required between cut-outs*

*IMPORTANT: Base has to be able to support the weight of the oven. Please check oven manual for minimum weight requirements.

measurements in inches (mm)

Flush Installation

30-Inch Double or Combo Oven Over Warming or Storage Drawer

Flush installation
Double or combo oven over storage or warming drawer

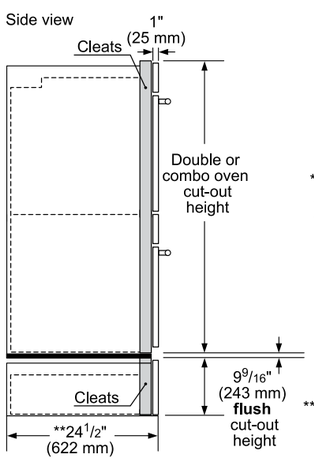

*IMPORTANT: Base has to be able to support the weight of the oven. Please check oven manual for minimum weight requirements.

minimum 1/2" (13 mm) required between cut-out*

Warming drawer

**For WD30W, the installed dimension may differ. This is based on 3/4" (19 mm) thick custom panel.

measurements in inches (mm)

Visit Thermador.com for complete specifications or text a Thermador model number to 21432 to have specs sent to your phone

Built-in MICROWAVES & DRAWERS

FOR MASTERPIECE® & PROFESSIONAL COLLECTIONS

Thermador Built-In Microwaves, Warming Drawers and Storage Drawers bring elegance, practicality, and innovation to your kitchen with a range of settings for any meal.

DROP-DOWN DOOR MICROWAVE

Masterpiece®
30-INCH – MB30WS

BUILT-IN MICROWAVES

Professional & Masterpiece®

2021 PROBUILDER TOP100 PRODUCTS

30-Inch

24-Inch

Professional & Masterpiece® MicroDrawer® Microwave

- 950 Watts
- 10 Cooking Modes
- Sensor Cooking
- Touch Open / Close

30-Inch – MD30WS

24-Inch – MD24WS

Professional Drop-Down Door

- 950 Watts
- 10 Power Levels
- Sensor Cooking

30-Inch – MB30WP

Masterpiece Drop-Down Door

- 950 Watts
- 10 Power Levels
- Sensor Cooking

30-Inch – MB30WS

Masterpiece Drop-Down Door

- 950 Watts
- 10 Power Levels
- Sensor Cooking

30-Inch – MB30WS

Visit Thermador.com for complete specifications or text a Thermador model number to 21432 to have specs sent to your phone

WARMING DRAWERS

30-Inch

2021 PROBUILDER TOP100 PRODUCTS

Custom Panel

- Warming Drawer
- Custom Panel Ready
- SoftClose® Drawer

30-Inch – WD30W

Push To Open

- Warming Drawer
- Stainless Steel

30-Inch – WD30WC

STORAGE DRAWERS

30-Inch

2021 PROBUILDER TOP100 PRODUCTS

Push To Open

- Storage Drawer
- Stainless Steel

30-Inch – SD30WC

Push To Open – Short

- Short Storage Drawer
- Stainless Steel
- Pairs with Thermador Steam Oven

30-Inch – SDS30WC

Visit Thermador.com for complete specifications or text a Thermador model number to 21432 to have specs sent to your phone

PLANNING INFORMATION

Built-In Microwaves

Model Options

Several Thermador microwaves are available to meet a wide variety of installations. Choose a Thermador 24-inch or 30-inch Built-in MicroDrawer® Microwave which can be installed perfectly flush in any standard depth cabinetry. A Built-in Microwave with a drop-down door is available with a Professional or Masterpiece® handle. A Built-Under Microwave Hood is also available for select installations. Be sure to reference the correct model information in this design guide.

Installation Considerations

The information in this design guide provides key features, product dimensions, cutouts and installation specifications. Before installing a Thermador Microwave oven, be sure to verify the cabinet dimensions and electrical connections. Installation instructions are subject to change. Always consult with the installation manual included with the product for complete details prior to the installation.

It is the responsibility of the owner and the installer to determine if additional requirements and/or standards apply to specific installations.

Installation Options

Microdrawer® Microwave

The Thermador MicroDrawer® Microwave can be built into a cabinet or wall as a standalone unit or under a Thermador Built-in Oven.

Check to be sure that there is a clearance of 2" or greater between the top of the MicroDrawer® Microwave and the bottom of a built-in wall oven above it.

Built-In Microwaves With Drop-Down Door

Thermador Built-in Microwaves may be installed into a cabinet or wall as a standalone unit or above any Thermador Built-in Oven. They may also be installed above any Thermador Warming Drawer.

Side-by-Side Installation

Thermador Built-in Microwaves may be installed side-by-side in combination with a single wall oven. Accessory kit TWO30YS may be required. See page 77 for details on approved combinations for side-by-side installation.

Electrical Specifications

These units require a 120 volt, 60 Hz, 15 AMP (minimum) circuit. It is recommended that the unit be installed to a separate circuit that serves only this appliance.

These appliances are fitted with a 3-prong grounded electrical plug. Do not modify the plug or use an adapter. If the plug does not fit with the available receptacle, have a licensed electrician install a properly grounded outlet before proceeding with the installation.

Model	*Required Circuit Breaker*
	240V, 60 Hz
MD30WS	15 A
MD24WS	15 A
MB30WP	15 A
MB30WS	15 A
MU30WSU	15 A

Electrical Location – Microdrawer® Microwaves

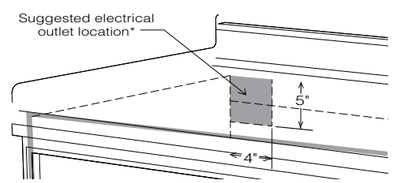

Unit can also be installed using an electrical outlet in an adjacent cabinet within the area where the provided electrical cord can reach. Do not use an extension cord. If the power supply cord is too short, have a qualified electrician or serviceman install an outlet near the appliance.

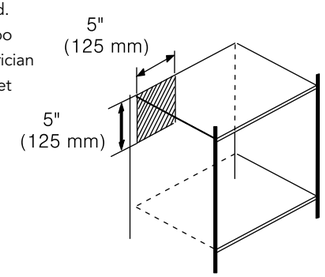

Electrical Location – Built-In Microwaves with Drop-Down Door

Anywhere within the shaded area the minimal distance between the appliance and the wall is 1¾ in (45 mm). The outlet can be located anywhere within the shaded area.

INSTALLATION

Built-In Microwaves

Dimensions

30-Inch Microdrawer® Microwave

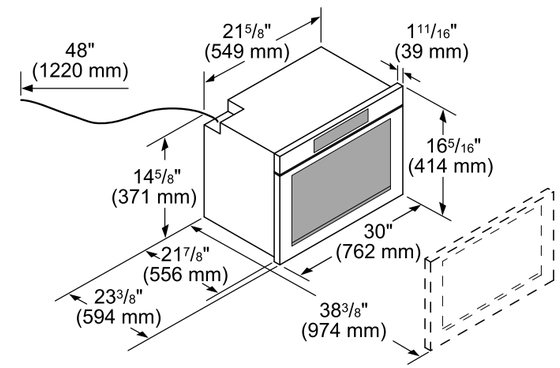

Standard Installation

30-Inch Microdrawer® Microwave

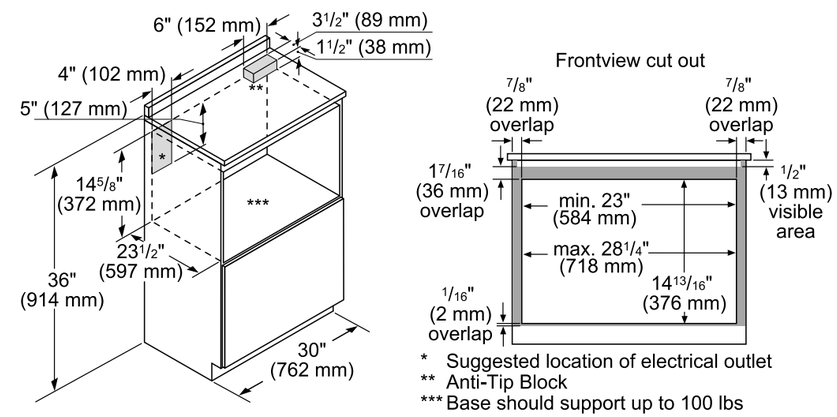

Flush Installation

30-Inch Microdrawer® Microwave

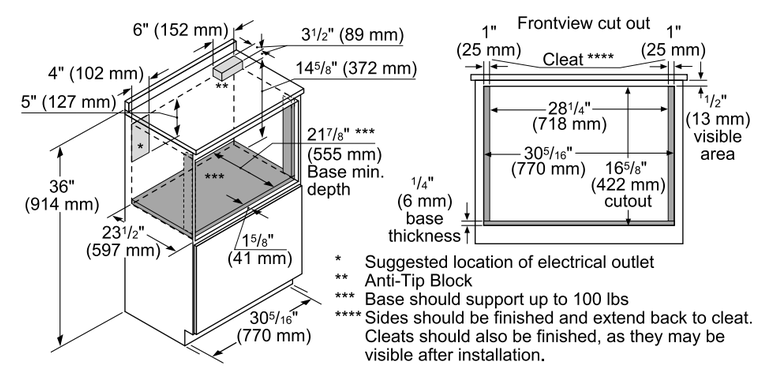

Dimensions

24-Inch Microdrawer® Microwave

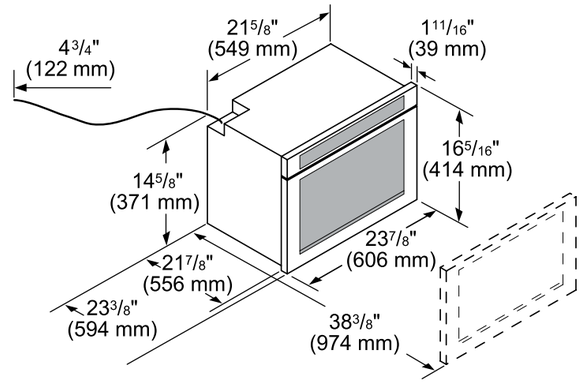

Standard Installation

24-Inch Microdrawer® Microwave

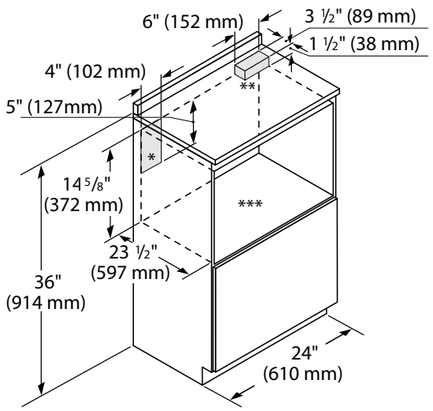

Frontview cut out

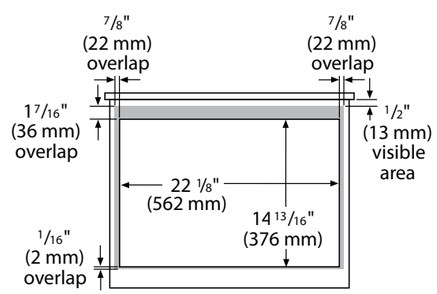

* Suggested location of electrical outlet
** Anti-Tip Block
*** Base should support up to 100 lbs

Flush Installation

24-Inch Microdrawer® Microwave

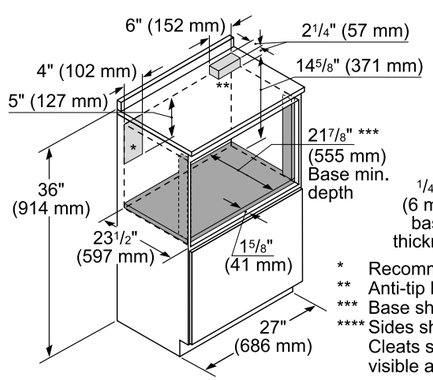

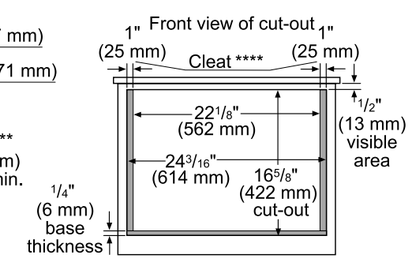

* Recommended location of electrical outlet
** Anti-tip block
*** Base should support up to 100 lbs
**** Sides should be finished and extend back to cleat. Cleats should also be finished, as they may be visible after installation.

Built-In Microwave and Cutout Dimensions

30-Inch

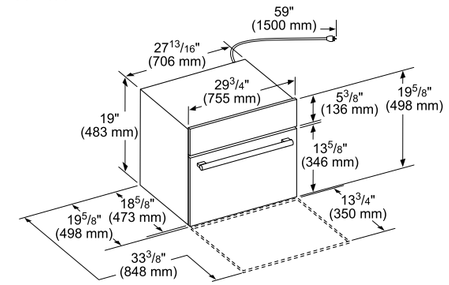

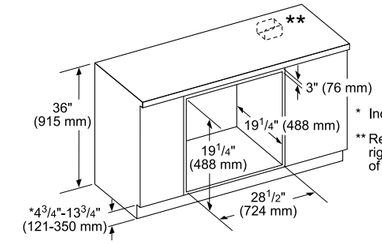

* Includes 3/4" (19 mm) base plate
** Receptacle may be located left or right of the unit, within reach of the power cord.

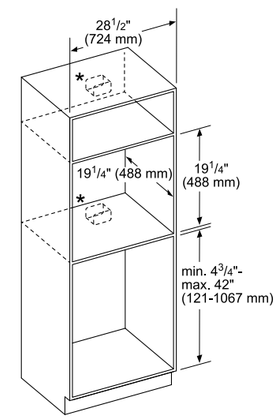

* Receptacle may be located above or beneath the unit within reach of the power cord.

Door Handle Depth*

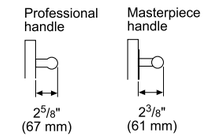

* Protrusion of handle from outer part of door. Does not include thikness of door.

Flush Installation Top View

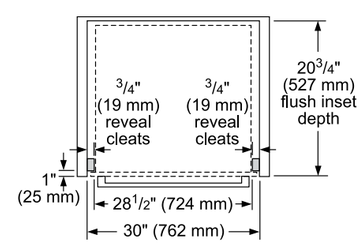

Side View

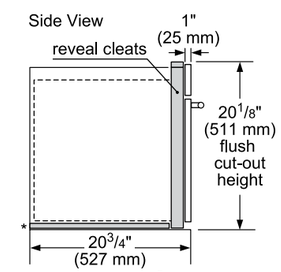

* Flush installation requires a 5/16" (8 mm) high x 28 1/2" (724 mm) wide x 19 3/4" (500 mm) deep baseplate underneath the unit body.

measurements in inches (mm)

INSTALLATION

Built-In Microwaves

Standard Installation Over Single Oven

30-Inch Built-In Microwaves

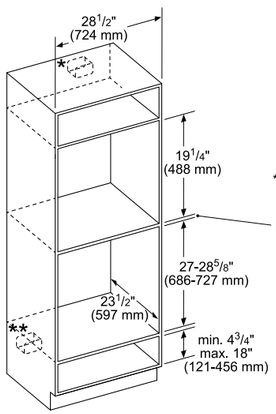

* Junction box may be located above or next to the unit within the reach of the power cable.

**Junction box may be located below (depending on space) or next to the unit within the reach of the power cable.

***Most combinations available as combo oven (one cut-out, one electrical hook-up).

Minimum dimension between cut-out:
- 1" (25 mm) for wall oven cut-out height of 28 5/8" (727 mm)
- 2 5/8" (67 mm) for wall oven cut-out height of 27" (686 mm).

measurements in inches (mm)

Flush Installation Over Single Oven

30-Inch Built-In Microwaves

Side View

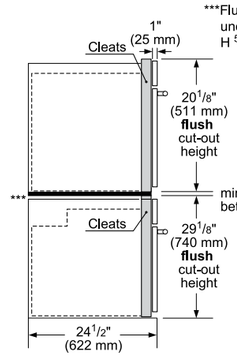

***Flush installation requires a base plate underneath the body: 30" products–Dimensions: H 5/16" (8 mm) x W 28 1/2" (724 mm) x D 22 1/2" (571 mm)

minimum 1/2" (13 mm) required between cut-out*

*IMPORTANT: Base has to be able to support the weight of the oven. Please check oven manual for minimum weight requirements.

**Most combinations available as combo oven (one cut-out, one electrical hook-up).

measurements in inches (mm)

Side-By-Side Built-In Oven Combination Guide

The following **OVENS** and **DRAWERS** are approved by BSH Home Appliances Corporation to be installed in combination. These products, identified in the table below, may be installed in combination with other cooking units. The suitability of the combination has not been evaluated by CSA.

Conventional Ovens*	Steam Ovens	Microwave Ovens	Speed Ovens
ME301WS	MEDS301WS	MB30WS	MC30WS
MED301WS	PODS301WS	MB30WP	MC30WP
MED301LWS	MEDS301WS w/SDS30WC	MB30WS w/SD30WC	MC30WS w/SD30WC
MED301RWS	PODS301WS w/SDS30WC	MB30WP w/SD30WC	MC30WP w/SD30WC
PO301W		MB30WS w/WD30WC	MC30WS w/WD30WC
POD301W		MB30WP w/WD30WC	MC30WP w/WD30WC
POD301LW			
POD301RW			

*Conventional ovens with a serial number beginning with "FD009" require accessory kit TWO30YS for side-by-side installation with another oven or in combination with any other approved product. All parts in the kit may not be required. Refer to the Oven Installation Guide for additional information.

Standard Side-By-Side Installation

30-Inch Built-In Microwaves

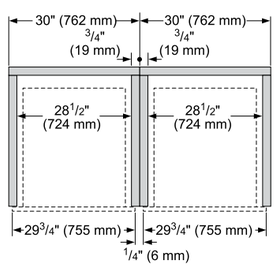

measurements in inches (mm)

IMPORTANT: When installing an oven in combination, a minimum distance between the ovens is required. Refer to the oven installation manual for all other measurements.

Flush Side-By-Side Installation

30-Inch Built-In Microwaves

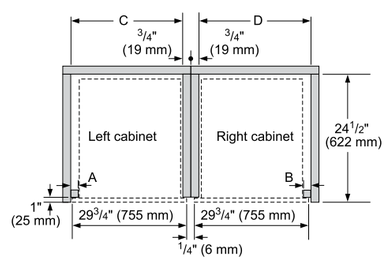

Combination Type	A Left reveal cleat	B Right reveal cleat	C cut-out width	D cut-out width
Flush Bottom hinge	3/4" (19 mm)	3/4" (19 mm)	29 1/4" (743 mm)	29 1/4" (743 mm)
Flush Side Hinge (Left)	1 1/2" (38 mm)	N/A*	30" (762 mm)	N/A*
Flush Side Hinge (Right)	N/A*	1 1/2" (38 mm)	N/A*	30" (762 mm)

*Installation not recommended

measurements in inches (mm)

Visit Thermador.com for complete specifications or text a Thermador model number to 21432 to have specs sent to your phone

INSTALLATION

Built-Under Microwave Hood

Microwave Hood Dimensions

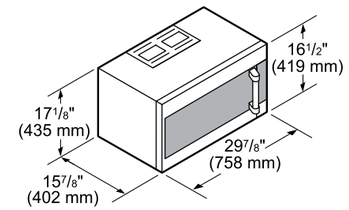

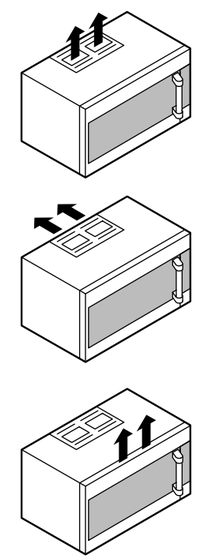

IMPORTANT: Thermador microwave model MU30WSU is approved for installation above Pro Harmony® 5-burner range models PRD305WHU and PRG305WH only.

Microwave Hood Standard Installation

Grounded 120V outlet located inside the cabinet above the oven, right side shown as example.

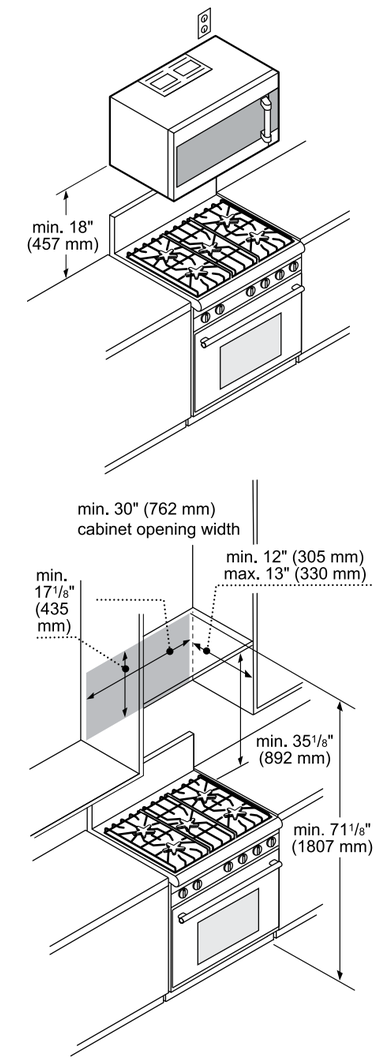

Visit Thermador.com for complete specifications or text a Thermador model number to 21432 to have specs sent to your phone

PLANNING INFORMATION

Warming & Storage Drawers

Model Options

Thermador 30-inch Warming Drawers are available in a push-to-open design with a stainless front or a Custom Panel design. These drawers pair beautifully with a Thermador speed oven or microwave. Thermador 30-inch Storage Drawers are available in a standard or short design. The short design pairs perfectly with a Thermador steam and convection oven. Be sure to reference the correct model information in this design guide.

Installation Considerations

The information in this design guide provides key features, product dimensions, cutouts and installation specifications. Before installing a Thermador Warming Drawer or Storage Drawer, be sure to verify the cabinet dimensions and electrical connections (if required). Installation instructions are subject to change. Always consult with the installation manual included with the product for complete details prior to the installation.

Electrical Specifications

Be sure your appliance is properly installed and grounded by a qualified technician. Installation, electrical connections and grounding must comply with all applicable local codes.

All Thermador Warming Drawers are designed to be connected to a 120V AC, 60 Hz, 3-wire, grounded outlet with a 15 A circuit breaker.

Electrical Location

The outlet can be installed in the back wall directly behind the drawer. A recessed power receptacle must not exceed 5 1/2 ft. (1.7 m) maximum distance from either side of the warming drawer cutout. Installation clearances permit for the excess power cord to be coiled behind the appliance.

Custom Front Panel

The Thermador Custom Panel Warming Drawer requires a custom front panel. You may build a custom drawer front panel to coordinate with your cabinetry. Custom panels must meet the following requirements:

- Have a handle
- Have the dimensions shown below
- Have a minimum thickness of 3/4" (19 mm)
- Have all edges finished
- If using wood, the back must be sealed to prevent moisture damage
- Be capable of withstanding a temperature of 158°F (70° C)

Installation Options

Wall-Mounted Installation

Thermador Warming Drawers may be installed below any Thermador Single or Double Built-in Oven. A minimum space of 1" (25.4 mm) is recommended between the bottom of the oven and the top of the warming drawer.

Under-Counter Installation

Thermador Warming Drawers may also be installed below any Thermador Electric or Non-professional Gas Cooktop as long as there is not contact between the bottom of the cooktop and the top of the warming drawer. When installing below a Thermador

Induction Cooktop, a minimum 1" (25.4 mm) air gap must be maintained between the bottom of the cooktop and the top of the warming drawer. When installing below a Thermador Professional Rangetop, a minimum 2 3/4" (70 mm) air gap must be maintained between the bottom of the rangetop and the top of the warming drawer.

The cabinet base must be flat and capable of supporting a weight of at least 110 lbs. (50 kg).

Side-by-Side Installation

Thermador Warming Drawers and Storage Drawers may be installed side-by-side in combination with a single wall oven. Accessory kit TWO30YS may be required. See page 77 for details on approved combinations for side-by-side installation.

Visit Thermador.com for complete specifications or text a Thermador model number to 21432 to have specs sent to your phone

INSTALLATION

Warming & Storage Drawers

Custom Panel Warming Drawer

WD30W

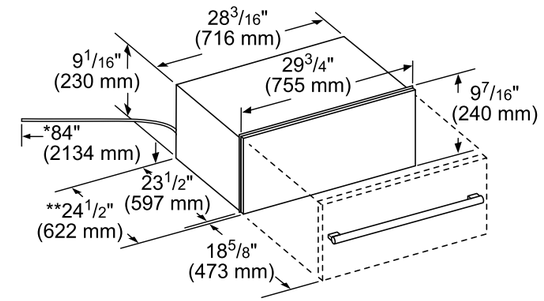

* Power cable on warming drawer is 84" (2134 mm).
** For WD30W, the installed dimension may differ. This is based on 3/4" (19 mm) thick custom panel.
*** Customer to provide custom panel and drawer handle

measurements in inches (mm)

Cutout Dimensions

WD30W, WD30WC and SD30WC

Standard Installation

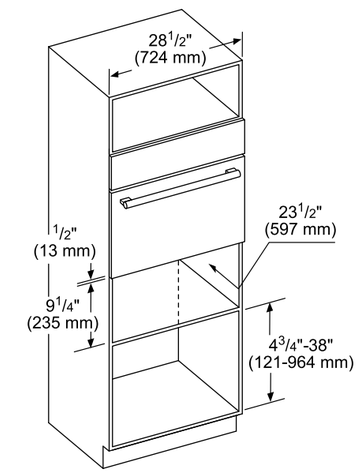

measurements in inches (mm)

Warming Drawer and Storage Drawer

WD30WC and SD30WC

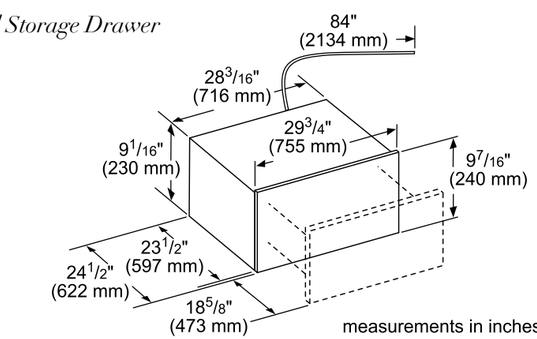

measurements in inches (mm)

Flush Installation

WD30W, WD30WC or SD30WC

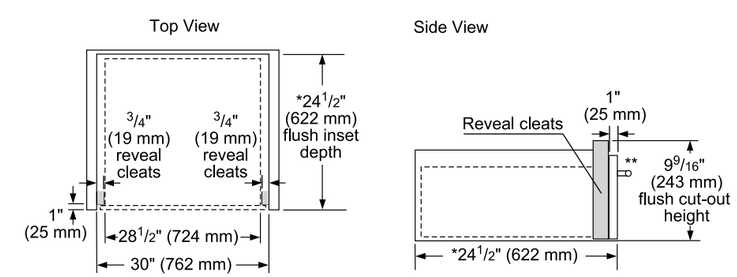

* For WD30W, the installed dimension may differ. This is based on 3/4" (19 mm) thick custom panel.
** Customer to provide custom panel and drawer handle.

measurements in inches (mm)

INSTALLATION

Warming & Storage Drawers

Flush Installation

Single Oven Over Storage or Warming Drawer
WD30W, WD30WC or SD30WC

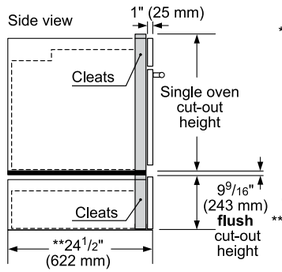

Single wall oven

*IMPORTANT: Base has to be able to support the weight of the oven. Please check oven manual for minimum weight requirements.

minimum 1/2" (13 mm) required between cut-outs*

Warming drawer

**For WD30W, the installed dimension may differ. This drawing based on a 3/4" (19 mm) thick custom panel.

measurements in inches (mm)

Standard Installation

Single Oven, Double Oven or Combo Oven
Over Warming or Storage Drawer
WD30W, WD30WC or SD30WC

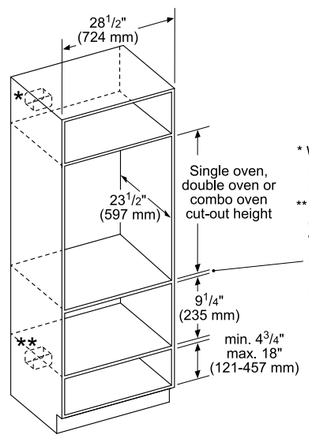

* Wall oven junction box may be located above or to the right or left of the unit within reach or the power cable.

**Electrical hook-up may be located below (depending on space) or next to the drawer within reach of the power cable.

Minimum 3/4" (18 mm) required between cut-outs.

measurements in inches (mm)

Flush Installation

Double or Combo Oven Over Storage
or Warming Drawer
WD30W, WD30WC or SD30WC

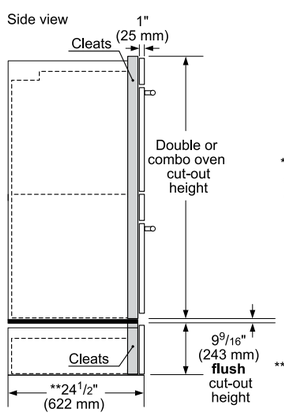

*IMPORTANT: Base has to be able to support the weight of the oven. Please check oven manual for minimum weight requirements.

minimum 1/2" (13 mm) required between cut-out*

Warming drawer

**For WD30W, the installed dimension may differ. This is based on 3/4" (19 mm) thick custom panel.

measurements in inches (mm)

See page 77 for table of approved oven and drawer combined installations.

INSTALLATION

Warming & Storage Drawers

30-Inch Storage Drawer and Cutout Dimensions

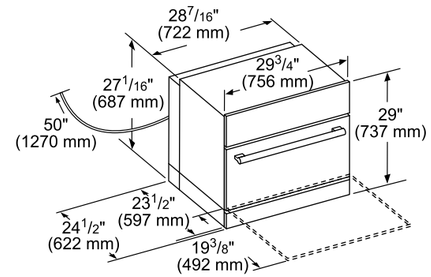

measurements in inches (mm)

Masterpiece Series Handle

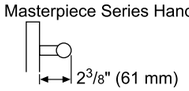

Professional Series Handle

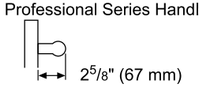

30-Inch Storage Drawer and Cutout Dimensions

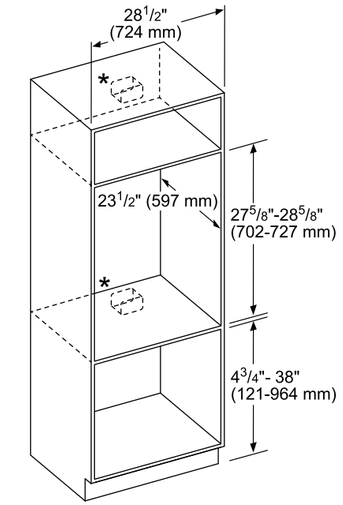

* For single ovens installed into a wall cabinet, the junction box may be located above, beneath, left or right of the unit within reach of the power cord.

measurements in inches (mm)

30-Inch Storage Drawer and Cutout Dimensions

Steam Oven with Storage Drawer – Side View

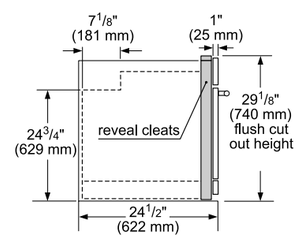

Top View

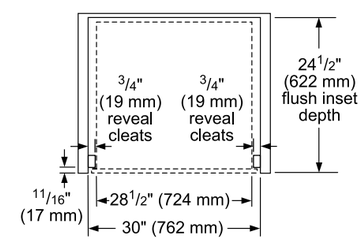

measurements in inches (mm)

Visit Thermador.com for complete specifications or text a Thermador model number to 21432 to have specs sent to your phone

LUXURY COMES IN ALL SIZES

Maximize Your Space with a Personalized Kitchen

Thermador appliances come in a variety of configurations to bring luxury design to every kitchen footprint, no matter the size.

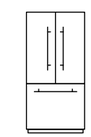

36-Inch Built-In Stainless Steel Masterpiece® Pre-Assembled French Door Bottom Freezer Refrigerator

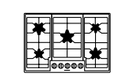

30-Inch Masterpiece® Gas Cooktop

30-Inch Masterpiece® Single Oven with Professional Handles

30-Inch Masterpiece® Wall Hood

24-Inch Professional Sapphire® Dishwasher

Kitchen Designed by: Venece Caldwell

Thermador Exclusive

Our patented Pedestal Star® Burner with ExtraLow® Select offers five distinct simmer settings for perfectly cooked dishes and delicate sauces.

COOKTOPS

FOR THE MASTERPIECE® COLLECTION

Featuring a suite of induction, electric and gas options, the Thermador Cooktop collection includes exclusives such as our patented Pedestal Star® Burner and the largest induction cooking surface.

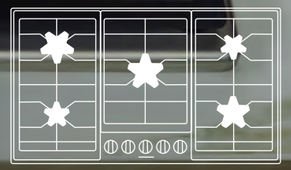

GAS COOKTOP

Patented Pedestal Star® Burner
36-INCH – SGSXP365TS

GAS COOKTOPS

36-Inch Masterpiece®

Patented Pedestal Star® Burner

- 5 Patented Pedestal Star® Burners (2 with ExtraLow® Select)
- 18,000 BTU Center Patented Pedestal Star® Burner
- QuickClean Base®
- Progressive Illuminated Light Ring Around Each Knob

36-Inch – SGSXP365TS

Patented Pedestal Star® Burner

- 5 Patented Pedestal Star® Burners
- 18,000 BTU Center Patented Pedestal Star® Burner
- QuickClean Base®

36-Inch – SGSP365TS

Patented Star® Burner

- 5 Patented Star® Burners (2 with ExtraLow® Select)
- 16,000 BTU Center Star® Burner

36-Inch – SGSX365TS

Patented Star® Burner

- 5 Patented Star® Burners
- 16,000 BTU Center Star® Burner

36-Inch – SGS365TS

GAS COOKTOPS

30-Inch Masterpiece®

Patented Pedestal Star® Burner

- 5 Patented Pedestal Star® Burners (2 with ExtraLow® Select)
- 18,000 BTU Center Patented Pedestal Star® Burner
- QuickClean Base®
- Progressive Illuminated Light Ring Around Each Knob

30-Inch – SGSXP305TS

Patented Pedestal Star® Burner

- 5 Patented Pedestal Star® Burners
- 18,000 BTU Center Patented Pedestal Star® Burner
- QuickClean Base®

30-Inch – SGSP305TS

Patented Star® Burner

- 5 Patented Star® Burners (2 with ExtraLow® Select)
- 16,000 BTU Center Star® Burner

30-Inch – SGSX305TS

Patented Star® Burner

- 5 Patented Star® Burners
- 16,000 BTU Center Star® Burner

30-Inch – SGS305TS

Blue Knob Kit

Accessorize any Patented Pedestal Star® Burner Gas Cooktop with a Signature Thermador Blue Knob Kit.

See page 102

See pages 102–103 for accessories

Visit Thermador.com for complete specifications or text a Thermador model number to 21432 to have specs sent to your phone

INDUCTION COOKTOPS

36-Inch Masterpiece®

Home Connect

Freedom® Induction

- Freedom Full Surface Induction
- Dark Gray Glass
- Home Connect® (Wi-Fi Enabled)

36-Inch Full Stainless Steel Frame – CIT36YWB

36-Inch Frameless Design – CIT36YWBB

Home Connect

Liberty® Induction

- Liberty Full Surface Induction (3 XL Zones)
- Titanium Gray Glass

36-Inch Full Stainless Steel Frame – CIT367YGS

36-Inch Frameless Design – CIT367YG

Home Connect

Liberty® Induction

- Liberty Full Surface Induction (3 XL Zones)
- Silver Mirrored Finish

36-Inch Full Stainless Steel Frame – CIT367YMS

36-Inch Frameless Design – CIT367YM

Heritage Induction

- Heritage Induction with 5 Zones
- Black Glass
- Frameless Design

36-Inch – CIT365YB

INDUCTION COOKTOPS

30-Inch Masterpiece®

Home Connect

Freedom® Induction

- Freedom Full Surface Induction
- Dark Gray Glass
- Home Connect® (Wi-Fi Enabled)
- Frameless Design

30-Inch – CIT30YWBB

Heritage Induction

- Heritage Induction with 4 Zones
- Silver Mirrored Finish
- Frameless Design

30-Inch – CIT304YM

Heritage Induction

- Heritage Induction with 4 Zones
- Black Glass
- Frameless Design

30-Inch – CIT304YB

See pages 104–105 for accessories

Visit Thermador.com for complete specifications or text a Thermador model number to 21432 to have specs sent to your phone

ELECTRIC COOKTOPS

36-Inch Masterpiece®

5 Elements Plus Bridge

- Touch Controls
- CookSmart®
- Full Stainless Steel Frame

36-Inch – CET366YB

5 Elements Plus Bridge

- Knob Controls
- Dual Zone Bridge Element
- Full Stainless Steel Frame

36-Inch – CEM366TB

ELECTRIC COOKTOPS

30-Inch Masterpiece®

4 Elements Plus Bridge

- Touch Controls
- CookSmart®
- Frameless Design

30-Inch – CET305YB

4 Elements Plus Bridge

- Knob Controls
- Dual Zone Bridge Element
- Frameless Design

30-Inch – CEM305TB

See page 101 for accessories

Visit Thermador.com for complete specifications or text a Thermador model number to 21432 to have specs sent to your phone

ELECTRIC COOKTOPS QUICK REFERENCE CHART

	Masterpiece®			
	CET366YB 36-Inch	CEM366TB 36-Inch	CET305YB 30-Inch	CEM305TB 30-Inch
Key Features				
Full Stainless Steel Frame	Yes	Yes	No	No
Number of Elements	5 + Bridge	5 + Bridge	4 + Bridge	4 + Bridge
Illuminated Touch Controls	Yes	No	Yes	No
Knob Control	No	Yes	No	Yes
General Properties				
Controls	Touch Controls	Metal Knobs	Touch Controls	Metal Knobs
Element Performance				
CookSmart®	Yes	No	Yes	No
Dual Zone Bridge Element	Yes	Yes	Yes	Yes
Triple Zone Element	Yes	Yes	Yes	Yes
Variable 9-Stage Power Setting	No	Yes	No	Yes
17 Power Level Setting	Yes	No	Yes	No
Element Size				
Dimension of Front Left Heating Element	7"	7"	7"	7"
Dimension of Back Left Heating Element	7", 5"	7", 5"	7", 5"	7", 5"
Dimension of Center Heating Element	11", 8", 6"	11", 8", 6"	11", 8", 6"	11", 8", 6"
Dimension of Back Right Heating Element	6"	6"	N/A	N/A
Dimension of Front Right Heating Element	8", 6"	8", 6"	6"	6"
Dimensions				
Overall Appliance Dimensions (HxWxD) (in)	7/16"+3 15/16" x 37" x 21 1/4"	7/16"+3 15/16" x 37" x 21 1/4"	7/16"+3 15/16" x 31" x 21 1/4"	7/16"+3 15/16" x 31" x 21 1/4"
Required Cutout Size (HxWxD) (in)	3 15/16" x 34 3/4" x 19 7/8"	3 15/16" x 34 3/4" x 19 7/8"	3 15/16" x 28 3/4" x 19 7/8"	3 15/16" x 28 3/4" x 19 7/8"

Optional Accessories – Electric Cooktops

CHEFSPAN08
10" Stainless Steel Pan

Visit Thermador.com for complete specifications or text a Thermador model number to 21432 to have specs sent to your phone

GAS COOKTOPS QUICK REFERENCE CHART

	Masterpiece® Patented Pedestal Star® Burner			
	SGSXP365TS 36-Inch	SGSP365TS 36-Inch	SGSXP305TS 30-Inch	SGSP305TS 30-Inch
Key Features				
Burner Style	Patented Pedestal Star® Burner	Patented Pedestal Star® Burner	Patented Pedestal Star® Burner	Patented Pedestal Star® Burner
QuickClean Base®	Yes	Yes	Yes	Yes
Number of Burners	5	5	5	5
Illuminated Burner "ON" Lights	Light Ring Around Each Knob	"ON" Light for Each Knob	Light Ring Around Each Knob	"ON" Light for Each Knob
General Properties				
Controls	Metal Knobs	Metal Knobs	Metal Knobs	Metal Knobs
Sealed Burners	Yes	Yes	Yes	Yes
Continuous Grates	Yes	Yes	Yes	Yes
Grate Material	Cast Iron	Cast Iron	Cast Iron	Cast Iron
Burner Performance				
Powerful Center Burner (NG / LP)	18,000 / 15,000 BTU	18,000 / 15,000 BTU	18,000 / 15,000 BTU	18,000 / 15,000 BTU
ExtraLow® Select Burners	2	0	2	0
Electronic Re-ignition	Yes	Yes	Yes	Yes
Dimensions				
Overall Appliance Dimensions (HxWxD) (in)	5 3/8" x 37" x 21 1/4"	5 3/8" x 37" x 21 1/4"	5 3/8" x 31" x 21 1/4"	5 3/8" x 31" x 21 1/4"
Required Cutout Size (HxWxD) (in)	3 13/16" x 34 15/16" x 19 1/8"	3 13/16" x 34 15/16" x 19 1/8"	3 13/16" x 28 15/16" x 19 1/8"	3 13/16" x 28 15/16" x 19 1/8"

Optional Accessories – Gas Cooktops with Patented Pedestal Star® Burner

SWOKRINGW Wok Ring

SGRIDDLEW Griddle

SKNOBLUW Blue Knob Kit for use with Pedestal Star®Burner Gas Cooktops

SNPKITPEDW LP Conversion Kit for Patented Pedestal Star® Burner

Visit Thermador.com for complete specifications or text a Thermador model number to 21432 to have specs sent to your phone

GAS COOKTOPS QUICK REFERENCE CHART

	Masterpiece® Patented Star® Burner			
	SGSX365TS 36-Inch	SGS365TS 36-Inch	SGSX305TS 30-Inch	SGS305TS 30-Inch
Key Features				
Burner Style	Patented Star® Burner	Patented Star® Burner	Patented Star® Burner	Patented Star® Burner
QuickClean Base®	No	No	No	No
Number of Burners	5	5	5	5
Illuminated Burner "ON" Lights	"ON" Light	"ON" Light	"ON" Light	"ON" Light
General Properties				
Controls	Metal Knobs	Metal Knobs	Metal Knobs	Metal Knobs
Sealed Burners	Yes	Yes	Yes	Yes
Continuous Grates	Yes	Yes	Yes	Yes
Grate Material	Cast Iron	Cast Iron	Cast Iron	Cast Iron
Burner Performance				
Powerful Center Burner (NG / LP)	16,000 / 15,000 BTU	16,000 / 15,000 BTU	16,000 / 15,000 BTU	16,000 / 15,000 BTU
ExtraLow® Select Burners	2	0	2	0
Electronic Re-ignition	Yes	Yes	Yes	Yes
Dimensions				
Overall Appliance Dimensions (HxWxD) (in)	5 3/8" x 37" x 21 1/4"	5 3/8" x 37" x 21 1/4"	5 3/8" x 31" x 21 1/4"	5 3/8" x 31" x 21 1/4"
Required Cutout Size (HxWxD) (in)	3 13/16" x 34 15/16" x 19 1/8"	3 13/16" x 34 15/16" x 19 1/8"	3 13/16" x 28 15/16" x 19 1/8"	3 13/16" x 28 15/16" x 19 1/8"

Optional Accessories – Gas Cooktops with Patented Star® Burner

SWOKRINGW Wok Ring

SGRIDDLEW Griddle

SLPKITW LP Conversion Kit for Star® Burner

Visit Thermador.com for complete specifications or text a Thermador model number to 21432 to have specs sent to your phone

INDUCTION COOKTOPS QUICK REFERENCE CHART

	Masterpiece®			
	CIT36YWB 36-Inch Freedom®	CIT36YWBB 36-Inch Freedom®	CIT30YWBB 30-Inch Freedom®	CIT367YGS 36-Inch Liberty®
Key Features				
Overall Style	Full Stainless Steel Frame	Frameless Design	Frameless Design	Full Stainless Steel Frame
Surface Style	Dark Gray Glass	Dark Gray Glass	Dark Gray Glass	Titanium Gray Glass
Cooking Zones	Full Surface	Full Surface	Full Surface	Full Surface (3 XL Zones)
Automatic Cookware Detection	Yes	Yes	Yes	Yes
Sapphire Glow® LED Surface Lights	Yes	Yes	Yes	No
Thermador® Connected Experience by Home Connect® (Wi-Fi Enabled)	Yes	Yes	Yes	Yes
Element Performance				
TeppanyakiPro® Function	Yes	Yes	Yes	No
PowerBoost®	Yes	Yes	Yes	Yes
MyZone®	Yes	Yes	Yes	No
HeatShift®	No	No	No	Yes
MoveMode®	Yes	Yes	Yes	Yes
PanBoost®	Yes	Yes	Yes	Yes
Cooktop-Hood Sync	Yes	Yes	Yes	No
CookSmart® with 5 Pre-set Temperature Levels	No	No	No	Yes
Cooking Sensor Mode	Yes	Yes	Yes	No
Cookware Size	(Up To 6 Pots Heated)	(Up To 6 Pots Heated)	(Up To 5 Pots Heated)	
Minimum Cookware Size*	3 1/2" x 3 1/2"	3 1/2" x 3 1/2"	3 1/2" x 3 1/2"	N/A
Maximum Cookware Size*	13"x 21"	13"x 21"	13"x 21"	N/A
Element Size				
Dimension of Front Left Heating Element	Full Surface	Full Surface	Full Surface	7 1/2" x 9"
Dimension of Back Left Heating Element	Full Surface	Full Surface	Full Surface	7 1/2" x 9"
Dimension of Center Zone Heating Element	Full Surface	Full Surface	Full Surface	11 1/4" x 9 1/2"
Dimension of Back Right Heating Element	Full Surface	Full Surface	Full Surface	7 1/2" x 9"
Dimension of Front Right Heating Element	Full Surface	Full Surface	Full Surface	7 1/2" x 9"
Dimensions				
Overall Appliance Dimensions (HxWxD) (in)	4 1/8" x 37" x 21 1/4"	4 1/8" x 37" x 21 1/4"	4 1/8" x 31" x 21 1/4"	3/8"+3 7/8" x 37" x 21 1/4"
Required Cutout Size (HxWxD) (in)	4 1/8" x 34 3/4" x 19 7/8"	4 1/8" x 34 3/4" x 19 7/8"	4 1/8" x 28 3/4" x 19 7/8"	3 7/8" x 34 3/4" x 19 7/8"

Optional Accessories – Induction Cooktops

CHEFSPAN08 10" Stainless Steel Pan. (Freedom, Liberty and 30" Heritage)

CHEFSPAN13 16" Round Skillet (Freedom and Heritage)

TROASTERT Stainless Steel Roaster Pan (Freedom and Liberty)

TEPPAN1016 10" x 16" Griddle Style Teppanyaki (Freedom and Liberty)

*Cookware must have a flat bottom in order to utilize the full cooking surface. Only use ferromagnetic cookware for induction cooking.

INDUCTION COOKTOPS QUICK REFERENCE CHART

	Masterpiece®					
	CIT367YG 36-Inch Liberty®	CIT367YMS 36-Inch Liberty®	CIT367YM 36-Inch Liberty®	CIT365YB 36-Inch Heritage	CIT304YB 30-Inch Heritage	CIT304YM 30-Inch Heritage
Key Features						
Overall Style	Frameless Design	Full Stainless Steel Frame	Frameless Design	Frameless Design	Frameless Design	Frameless Design
Surface Style	Titanium Gray Glass	Silver Mirrored Finish	Silver Mirrored Finish	Black Glass	Black Glass	Black Glass
Cooking Zones	Full Surface (3 XL Zones)	Full Surface (3 XL Zones)	Full Surface (3 Zones)	5	4	4
Automatic Cookware Detection	No	No	Yes	Yes	Yes	Yes
Sapphire Glow® LED Surface Lights	No	No	No	No	No	No
Thermador® Connected Experience by Home Connect® (Wi-Fi Enabled)	Yes	Yes	Yes	No	No	No
Element Performance						
TeppanyakiPro® Function	No	No	No	No	No	No
PowerBoost®	Yes	Yes	Yes	Yes	Yes	Yes
MyZone®	No	No	No	No	No	No
HeatShift®	Yes	Yes	Yes	No	No	No
MoveMode®	Yes	Yes	Yes	No	No	No
PanBoost®	Yes	Yes	Yes	Yes	No	No
Cooktop-Hood Sync	No	No	No	No	No	No
CookSmart® with 5 Pre-set Temperature Levels	Yes	Yes	No	No	No	No
Cooking Sensor Mode	No	No	No	No	No	No
Cookware Size						
Minimum Cookware Size*	N/A	N/A	N/A	N/A	N/A	N/A
Maximum Cookware Size*	N/A	N/A	N/A	N/A	N/A	N/A
Element Size						
Dimension of Front Left Heating Element	7 1/2" x 9"	7 1/2" x 9"	7 1/2" x 9"	7"	6"	6"
Dimension of Back Left Heating Element	7 1/2" x 9"	7 1/2" x 9"	7 1/2" x 9"	7"	9"	9"
Dimension of Center Zone Heating Element	11 1/4" x 9 1/2"	11 1/4" x 9 1/2"	11 1/4" x 9 1/2"	13", 11", 9"	N/A	N/A
Dimension of Back Right Heating Element	7 1/2" x 9"	7 1/2" x 9"	7 1/2" x 9"	6"	11"	11"
Dimension of Front Right Heating Element	7 1/2" x 9"	7 1/2" x 9"	7 1/2" x 9"	9"	6"	6"
Dimensions						
Overall Appliance Dimensions (HxWxD) (in)	3/8"+3 7/8" x 37" x 21 1/4"	1/4"+4" x 37" x 21 1/4"	1/4"+4" x 37" x 21 1/4"	3/8"+3 7/8" x 37" x 21 1/4"	3/8"+3 7/8" x 31" x 21 1/4"	1/4"+4" x 31" x 21 1/4"
Required Cutout Size (HxWxD) (in)	3 7/8" x 34 3/4" x 19 7/8"	4" x 34 7/8" x 19 7/8"	4" x 34 7/8" x 19 7/8"	3 7/8" x 34 3/4" x 19 7/8"	3 7/8" x 28 3/4" x 19 7/8"	3 7/8" x 28 3/4" x 19 7/8"

Optional Accessories – Induction Cooktops

TEPPAN1321 13" x 21" Griddle Style Teppanyaki (Freedom)

TGRILLPANX 17" x 9" Non-Stick Induction Grill (Freedom and Liberty)

TCOOKSENSW Wireless Cooking Sensor (Freedom)

Visit Thermador.com for complete specifications or text a Thermador model number to 21432 to have specs sent to your phone

Builder: Toll Brothers City Living | 1000 Maxwell Place

Thermador®

Defined by Quality
Empowered by Design

Built to Handle Any Project

Ensure every project is backed by leading capacity, power, and unparalleled innovation—build and design with Thermador.

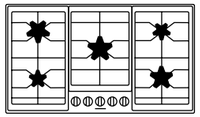

Gas Cooktop
56% greater flame efficiency

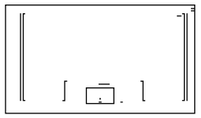

Freedom® Induction
Largest fully usable cooking surface

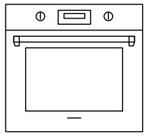

Steam Oven
Industry-leading Steam Oven capacity*

View the Collections at:
(Virtual or in-person consultation, by appointment only)

New York | A&D Building
150 East 58th St., Suite 700 | New York, NY 10155 | 917-853-9907

Chicago | BSH Experience Design Center
222 Merchandise Mart Plaza, Suite 108 | Chicago, IL 60654 | 312-832-3200

Irvine | BSH Experience Design Center
17911 Von Karman Ave #100 | Irvine, CA 92614 | 949-224-4700

THERMADORVIRTUALSHOWROOM.COM

*According to AHAM Standards

PLANNING INFORMATION

Gas Cooktops

Model Options

There are two sizes of Thermador Masterpiece® Gas Cooktops to choose from—30-inch and 36-inch. Every model is LP convertible by ordering a conversion kit. Be sure to reference the correct model information in this design guide.

Installation Considerations

The information in this design guide provides key features, product dimensions, cutouts and installation specifications. Before installing a Thermador Masterpiece® Gas Cooktop, be sure to verify the cutout dimensions and electrical / gas connections. Installation instructions are subject to change. Always consult with the installation manual included with the product for complete details prior to the installation.

Thermador Masterpiece® Gas Cooktops may be installed above a Thermador Oven, as long as the minimum distance between the cabinet floor and countertop is maintained. Reference the installation pages in this guide for details on installing above a conventional oven, steam oven, and microwave / speed oven.

Thermador Masterpiece® Gas Cooktops may also be installed above a Thermador Warming Drawer to create a convenient cooking center. Refer to the warming drawer section for additional specifications.

Model	*Approved Cooktop Over Thermador Oven Installation*
SGSXP365TS	•
SGSP365TS	•
SGSX365TS	•
SGS365TS	•
SGSXP305TS	•
SGSP305TS	•
SGSX305TS	•
SGS305TS	•

Prepare The Countertop

Some solid surface countertops require a special cutout size and special installation. For example, heat reflective tape or rounded corners may be necessary. Contact the countertop manufacturer for instructions specific to your countertop.

Ventilation Requirements

We strongly recommend that a Thermador Ventilation Hood be installed with all Thermador Masterpiece® Gas Cooktops. The hood must be installed according to instructions furnished with the hood. Refer to the ventilation section or www.Thermador.com for a complete selection of ventilation options, blowers, and accessories.

When installing the gas cooktop with a downdraft ventilation system, make sure that a minimum 27 square inch (174 cm²) opening is provided in the toe-kick and cabinet base for adequate air inlet.

A cooktop sealing kit must also be purchased and installed. Refer to the downdraft ventilation section for more details.

Electrical and Gas Specifications

Be sure your appliance is properly installed and grounded by a qualified technician. Installation, electrical and gas connections, and grounding must comply with all applicable local codes. Thermador Masterpiece® Gas Cooktops are equipped with a 60-inch, 3-wire supply cord and require a 60 Hz, 15 Amp, 120 VAC connection.

IMPORTANT: It is required that the cooktop be installed on a grounded, non-GFCI branch circuit.

Thermador Masterpiece® Gas Cooktops are shipped by the factory to operate on natural gas. They must be converted for use with propane. Verify the type of gas being used at the installation site matches the type of gas used by the appliance. If the location / job site requires conversion from natural gas to propane (LP), order the appropriate kit by referencing the model specification page in this guide. Field conversion must be done by qualified service personnel only. Please refer to the LP Conversion Instructions for further information.

Supply Pressure Requirements:

NATURAL GAS – 7 inches water column (14.9 Millibars) minimum.

LP (PROPANE GAS) – 11 inches water column (27.4 Millibars) minimum.

NOTE: The propane gas tank must be equipped with its own high pressure regulator in addition to the pressure regulator supplied with this unit.

Electrical and Gas Locations

The opening for the gas connection and electrical cord is located at the right rear of rough-in box.

Plan the installation so that the power connection is accessible from the front of the cabinet. Install a manual gas shut-off valve near the appliance. It must be easily accessible in an emergency.

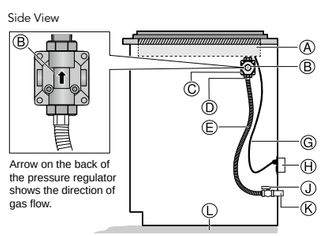

A – Rough-in Cooktop Box
B – Arrow on Pressure Regulator
C – Pressure Regulator
D – 1/2" Female Pipe Threads
E – Flexible Gas Line
G – Power Cord (60 inches / 1,524 mm)
H – 120 Volt Receptacle
J – Gas Cut-off Valve
K – Gas Supply Line Stub-out
L – Floor

INSTALLATION

Gas Cooktops

36-Inch Cooktop and Cutout Dimensions

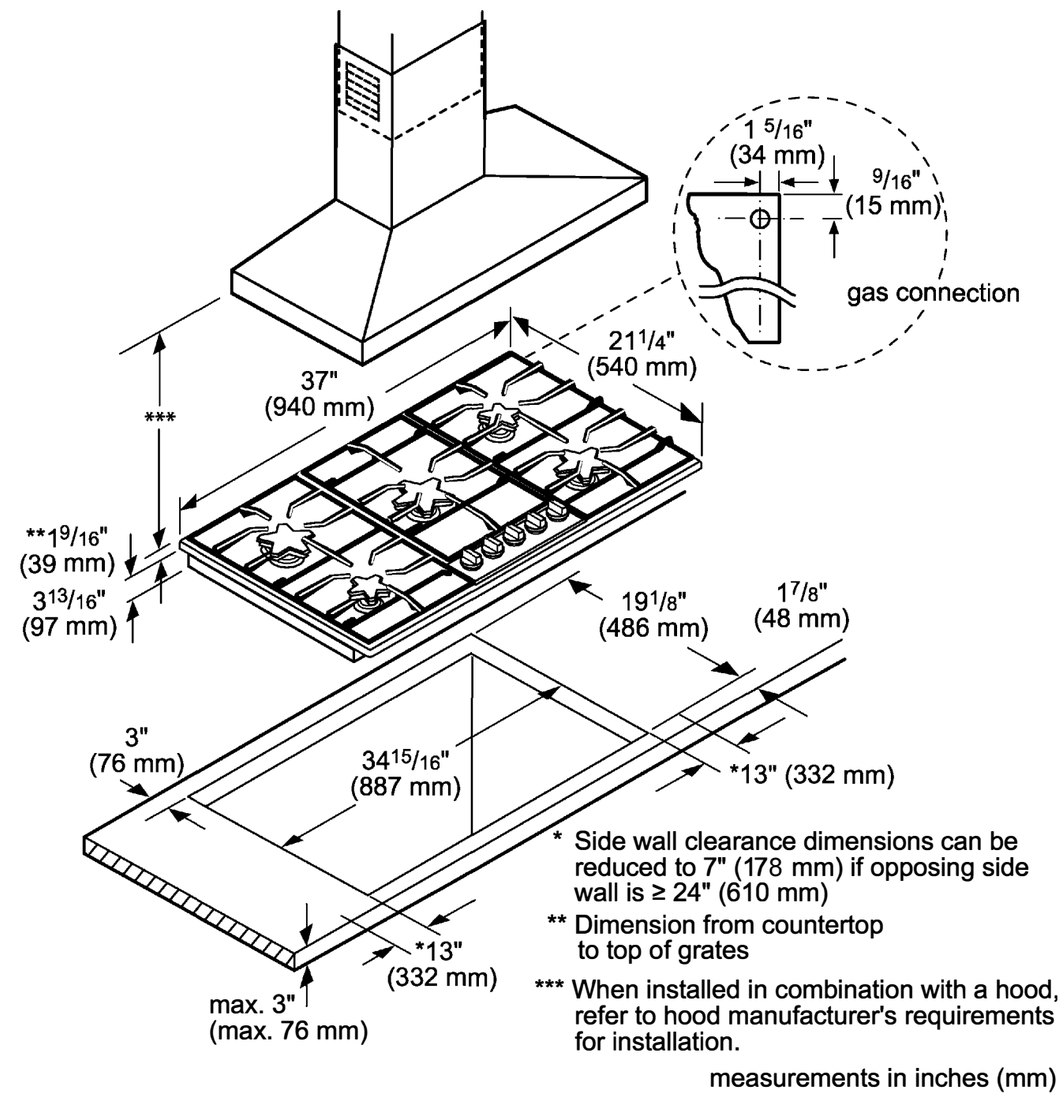

Visit Thermador.com for complete specifications or text a Thermador model number to 21432 to have specs sent to your phone

30-Inch Cooktop and Cutout Dimensions

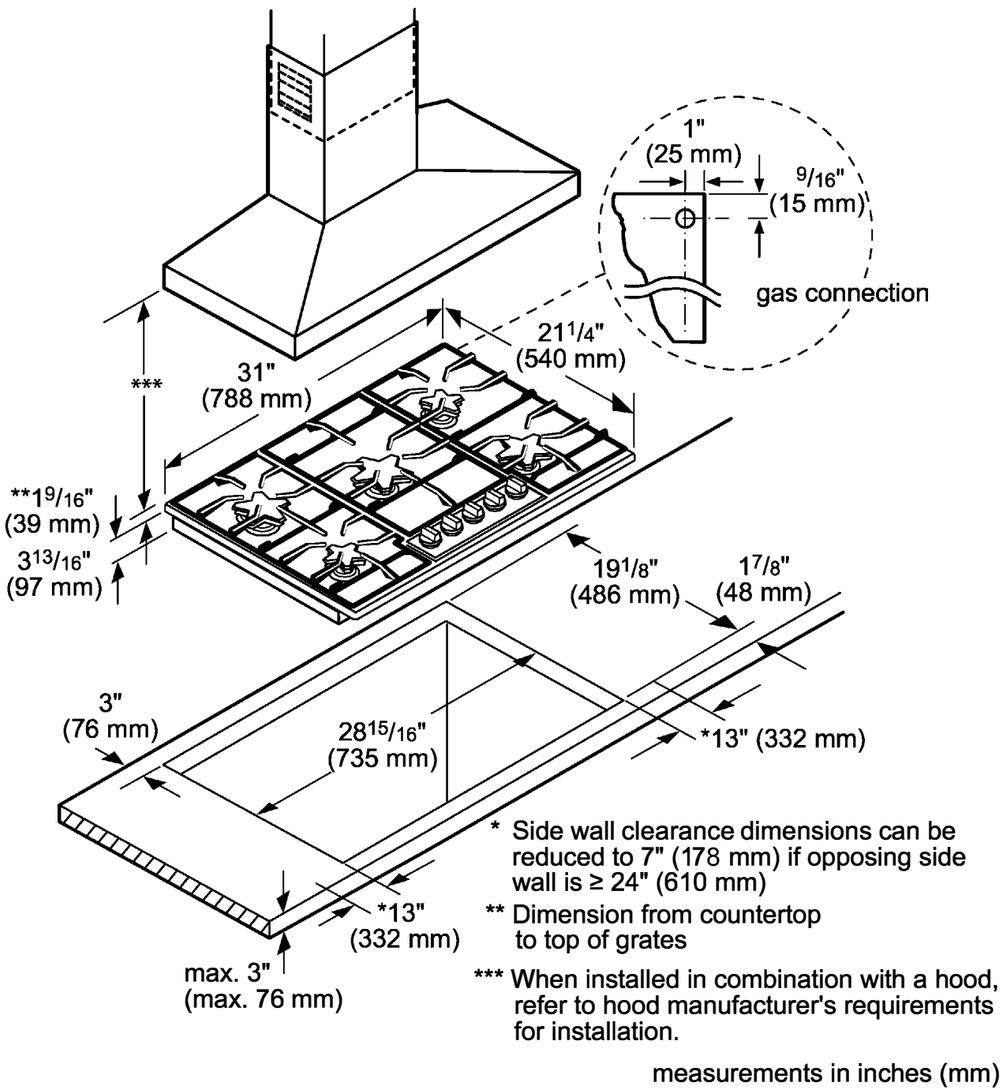

30-Inch & 36-Inch Gas Cooktop Cabinet Requirements

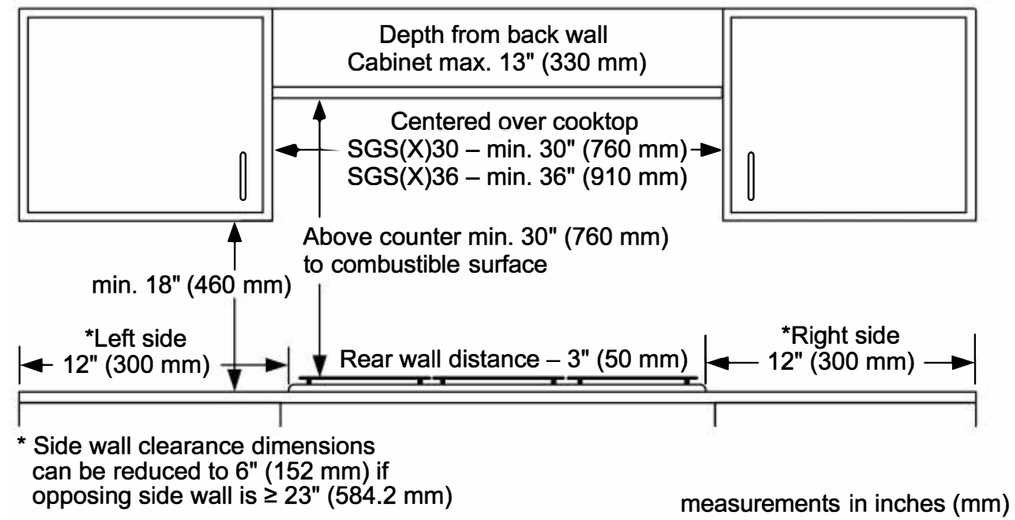

NOTE: Dimension requirements are for combustible surfaces. When the surface is protected by a material listed by UL as a Floor Protector and Wall Shield covered with not less than No. 28 MSG sheet metal 0.015 inch (0.38 mm) stainless steel, 0.024 inch (0.6 mm) aluminum or copper, it is considered noncombustible and some dimensions may be reduced. For a noncombustible surface over the cooktop, the minimum clearance is 24" (61 cm) rather than 30" (76 cm).

30-Inch & 36-Inch Gas Cooktop Installation Above a Thermador Built-In Oven

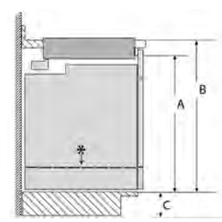

Product Type	A Inches (mm)	B min. Inches (mm)	C max. Inches (mm)
Conventional Oven	28 1/4 (718)	31 1/4 (794) min.	4 3/4 (121)
Steam Oven	25 1/16 (636)	28 1/16 (713)	7 15/16 (202)
Steam Oven with 4" Storage Drawer*	28 1/4 (718)	31 1/4 (794) min.	4 3/4 (121)
Microwave / Speed Oven	19 1/4 (488)	24 (609) min.	12 (306)
Microwave / Speed Oven with Warming Drawer*	28 1/4 (718)	31 1/4 (794) min.	4 3/4 (121)

When installing an oven or oven with a drawer in combination with a cooktop, a minimum distance between the cabinet floor and countertop (B) is required. Reference the table for dimensions. Refer to the oven installation guide for all other measurements.

PLANNING INFORMATION

Induction Cooktops

Model Options

Models are available in our heritage black finish as well as our Freedom® dark gray glass, Liberty® titanium gray glass and silver mirrored finish for those who want a bold, striking alternative that goes perfectly with stainless steel appliances. Be sure to reference the correct model information in this design guide.

Installation Considerations

The information in this design guide provides key features, product dimensions, cutouts and installation specifications. Before installing a Thermador Induction Cooktop, be sure to verify the cutout dimensions and electrical connections. Installation instructions are subject to change. Always consult with the installation manual included with the product for complete details prior to the installation.

Thermador Masterpiece® Induction Cooktops may be installed above a Thermador Oven, as long as the minimum distance between the cabinet floor and countertop is maintained. Reference the installation pages in this guide for details on installing above a conventional oven, steam oven, and microwave / speed oven.

Thermador Induction Cooktops may also be installed above a Thermador Warming Drawer to create a convenient cooking center. Refer to the warming drawer section for additional specifications.

Model	*Approved Cooktop Over Thermador Oven Installation*
CIT36YWB	•
CIT36YWBB	•
CIT367YGS	•
CIT367YG	•
CIT367YMS	•
CIT367YM	•
CIT365YB	•
CIT30YWBB	•
CIT304YM	•
CIT304YB	•

Ventilation Requirements

We strongly recommend that a Thermador Ventilation Hood be installed with all Thermador Masterpiece® Induction Cooktops. The hood must be installed according to instructions furnished with the hood. Refer to the ventilation section or www.Thermador.com for a complete selection of ventilation options, blowers, and accessories.

Installation Requirements

For safety reasons, the provided heat shield must be installed when closed cabinets are used. Some solid surface countertops require special installation. For example, heat reflective tape or rounded corners may be necessary. Contact the countertop manufacturer for instructions specific to your countertop.

Warning

To reduce the risk of ignition of nearby combustible materials, install the countertop with a minimum distance of 2" (51 mm) from both side walls and the back wall.

Electrical Specifications

Be sure your appliance is properly installed and grounded by a qualified technician. Installation, electrical connections and grounding must comply with all applicable local codes.

All induction cooktops are dual rated, designed to be connected to either 240 / 208V AC, 60 Hz, 3-wire, single-phase power supply.

Install a suitable conduit box (not furnished). An appropriately-sized, UL-listed conduit connector must be used to correctly attach the conduit to the junction box.

Model	*Required Circuit Breaker*
	240 / 208V, 3-Wire, 50 / 60 Hz
CIT36YWB	30 A
CIT36YWBB	30 A
CIT367YGS	50 A
CIT367YG	50 A
CIT367YMS	50 A
CIT367YM	50 A
CIT365YB	50 A
CIT30YWBB	30 A
CIT304YM	30 A
CIT304YB	30 A

IMPORTANT: Local Codes may vary; installation, electrical connections and grounding must comply with all applicable local codes. If required by the National Electrical Code (or Canadian Electrical Code), this appliance must be installed on a separate branch circuit.

Electrical Location

The junction box must be located within 3 feet (~900 mm) of the cooktop connection. It should be easily accessible for service purposes.

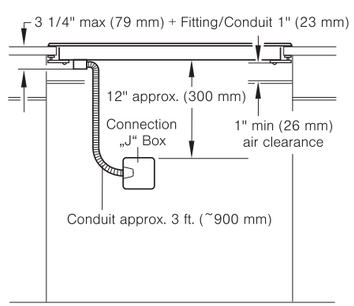

INSTALLATION

Induction Cooktops

36-Inch Cooktop and Cutout Dimensions

CIT36YWB

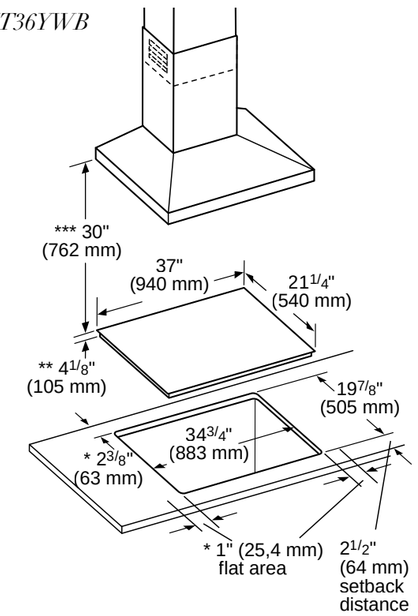

NOTE: The work surface should be horizontal and level. The stability of the countertop should be confirmed even after making the cutout.

* Minimum distance from cutout to the wall
** Installed depth includes 1" (26 mm) required air gap
*** Minimum distance between the surface of the cooktop and the lower edge of the exhaust hood.

measurements in inches (mm)

CIT36YWBB

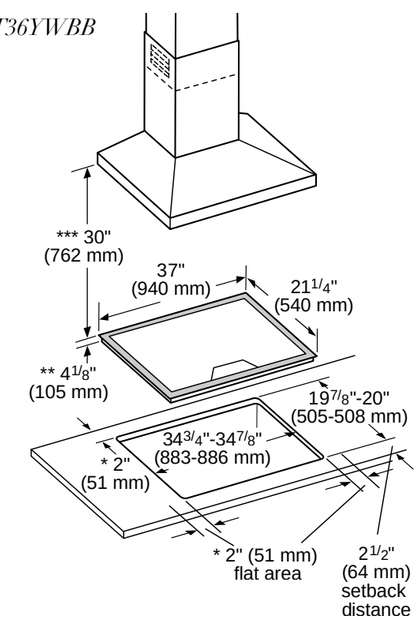

CIT367YGS, CIT367YG, CIT367YMS, CIT367YM, CIT365YB

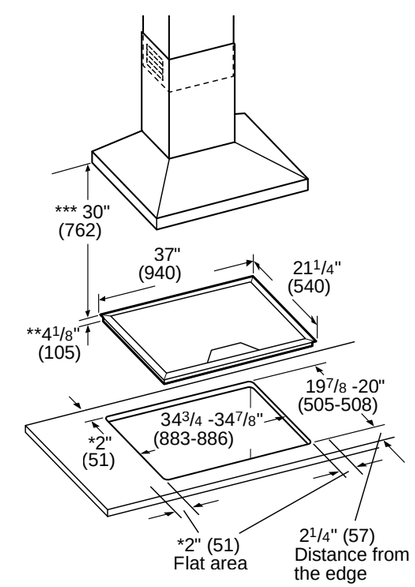

INSTALLATION

Induction Cooktops

30-Inch Cooktop and Cutout Dimensions

CIT304YM, CIT304YB

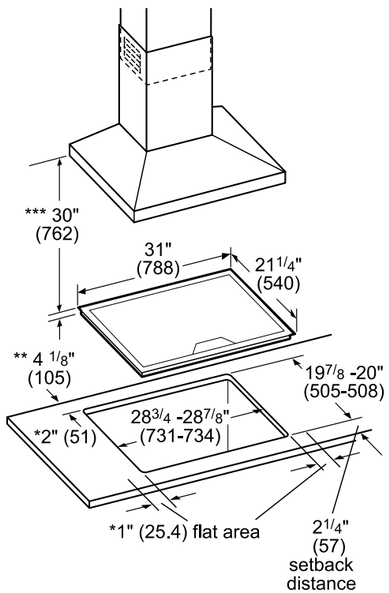

CIT30YWBB

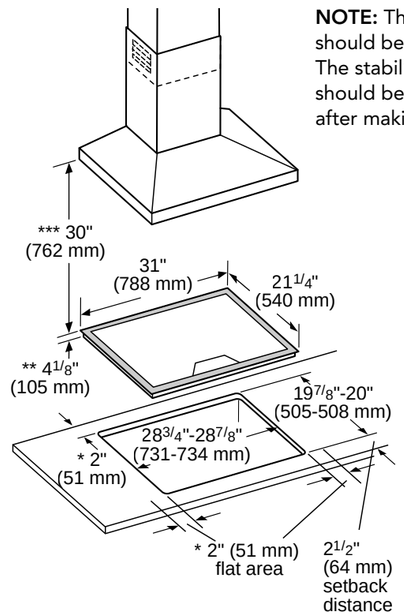

NOTE: The work surface should be horizontal and level. The stability of the countertop should be confirmed even after making the cutout.

* Minimum distance from cutout to the wall
** Installed depth includes 1" (26 mm) required air gap
*** Minimum distance between the cooktop surface and lower edge of exhaust hood.

measurements in inches (mm)

30-Inch & 36-Inch Induction Cooktop

Ventilation Clearance Requirements

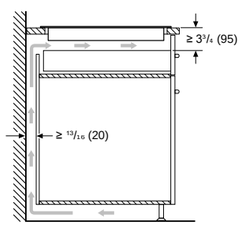

Measurements in inches (mm)

30-Inch & 36-Inch Induction Cooktop Installation Above a Thermador Built-In Oven

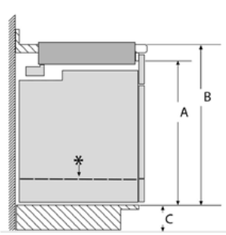

Product Type	A Inches (mm)	B min. Inches (mm)	C max. Inches (mm)
Conventional Oven	28 1/4 (718)	31 1/4 (794) min.	4 3/4 (121)
Steam Oven	25 1/16 (636)	28 1/16 (713)	7 15/16 (202)
Steam Oven with 4" Storage Drawer*	28 1/4 (718)	31 1/4 (794) min.	4 3/4 (121)
Microwave / Speed Oven	19 1/4 (488)	24 (609) min.	12" (306)
Microwave / Speed Oven with Warming drawer*	28 1/4 (718)	31 1/4 (794) min.	4 3/4 (121)

When installing an oven or oven with a drawer in combination with a cooktop, a minimum distance between the cabinet floor and countertop (B) is required. Reference the table for dimensions. Refer to the oven installation guide for all other measurements.

INSTALLATION

Electric Cooktops

Model Options

There are two sizes of Masterpiece® Electric Cooktops to choose from—30-inch and 36-inch. Models are available with mechanical controls and touch controls in a variety of cooktop configurations to fit your client's cooking style. Be sure to reference the correct model information in this design guide.

Installation Considerations

The information in this design guide provides key features, product dimensions, cutouts and installation specifications. Before installing a Thermador Masterpiece® Electric Cooktop, be sure to verify the cutout dimensions and electrical connections. Installation instructions are subject to change. Always consult with the installation manual included with the product for complete details prior to the installation.

Thermador Masterpiece® Electric Cooktops may be installed above a Thermador Oven, as long as the minimum distance between the cabinet floor and countertop is maintained. Reference the installation pages in this guide for details on installing above a conventional oven, steam oven, and microwave / speed oven.

Thermador Masterpiece® Electric Cooktops may also be installed above a Thermador Warming Drawer to create a convenient cooking center. Refer to the warming drawer section for additional specifications.

Model	*Approved Cooktop Over Thermador Oven Installation*
CET366YB	•
CEM366TB	•
CET305YB	•
CEM305TB	•

Prepare The Countertop

Some solid surface countertops require a special cutout size and installation. For example, heat reflective tape or rounded corners may be necessary. Contact the countertop manufacturer for instructions specific to your countertop.

Ventilation Requirements

We strongly recommend that a Thermador Ventilation Hood be installed with all Thermador Masterpiece® Electric Cooktops. The hood must be installed according to instructions furnished with the hood. Refer to the ventilation section or www.Thermador.com for a complete selection of ventilation options, blowers, and accessories.

Warning

To reduce the risk of ignition of nearby combustible materials, install the countertop with a minimum distance of 2" (51 mm) from both side walls and the back wall.

Electrical Specifications

Be sure your appliance is properly installed and grounded by a qualified technician. Installation, electrical connections and grounding must comply with all applicable local codes.

All Thermador Electric Cooktops are dual rated, designed to be connected to either 240 / 208V AC, 60 Hz, 3-wire, single-phase power supply.

Install a suitable conduit box (not furnished). An appropriately-sized, UL-listed conduit connector must be used to correctly attach the conduit to the junction box.

Model	*Required Circuit Breaker*
	240 / 208V, 3-Wire, 60 Hz
CET366YB	50 / 40 A
CEM366TB	50 / 40 A
CET305YB	40 / 30 A
CEM305TB	40 / 30 A

IMPORTANT: Local Codes may vary; installation, electrical connections and grounding must comply with all applicable local codes. If required by the National Electrical Code (or Canadian Electrical Code), this appliance must be installed on a separate branch circuit.

Electrical Location

The junction box must be located within 3 feet (~900 mm) of the cooktop connection. It should be easily accessible for service purposes.

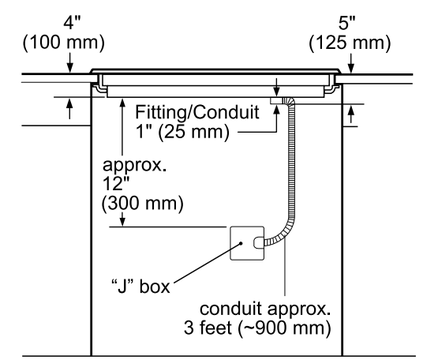

measurement in inches (mm)

36-Inch Electric Cooktop and Cutout Dimensions

Measurements in inches (mm)

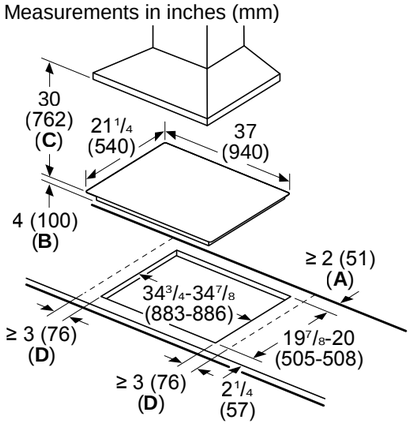

A: Min. distance from the cooktop cut-out to the wall

B: Max. recessed depth

C: Min. distance between the surface of the cooktop and the underside of the ventilation hood
This distance can be smaller, check installation instructions of ventilation hood

D: Min. distance from the cooktop cut-out to the side wall

30-Inch Electric Cooktop and Cutout Dimensions

Measurements in inches (mm)

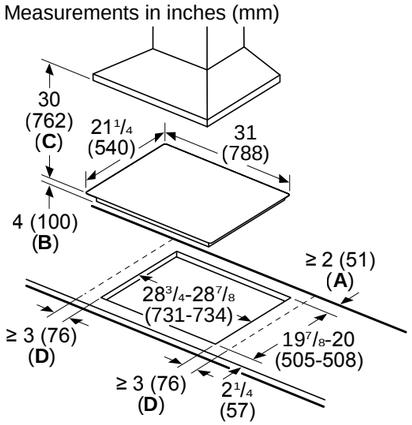

A: Min. distance from the cooktop cut-out to the wall

B: Max. recessed depth

C: Min. distance between the surface of the cooktop and the underside of the ventilation hood
This distance can be smaller, check installation instructions of ventilation hood

D: Min. distance from the cooktop cut-out to the side wall

30-Inch & 36-Inch Electric Cooktop Countertop Requirements

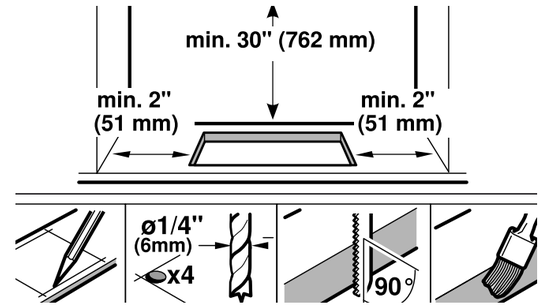

30-Inch & 36-Inch Electric Cooktop Installation Above a Thermador Built-In Oven

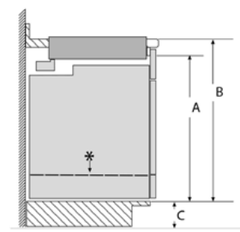

Product Type	A Inches (mm)	B min. Inches (mm)	C max. Inches (mm)
Conventional Oven	28 1/4 (718)	31 1/4 (794) min.	4 3/4 (121)
Steam Oven	25 1/16 (636)	28 1/16 (713)	7 15/16 (202)
Steam Oven with 4" Storage Drawer*	28 1/4 (718)	31 1/4 (794) min.	4 3/4 (121)
Microwave / Speed Oven	19 1/4 (488)	24 (609) min.	12" (306)
Microwave / Speed Oven with Warming drawer*	28 1/4 (718)	31 1/4 (794) min.	4 3/4 (121)

When installing an oven or oven with a drawer in combination with a cooktop, a minimum distance between the cabinet floor and countertop (B) is required. Reference the table for dimensions. Refer to the oven installation guide for all other measurements.

Thermador Exclusive

Custom hood inserts are specially designed to create a concealed ventilation system with customized Home Connect® wi-fi capabilities.

VENTILATION

FOR MASTERPIECE® & PROFESSIONAL COLLECTIONS

The perfect complement to the Thermador® cooking collection, newly designed Professional and Masterpiece Ventilation systems adhere to your design aesthetic, while catering to your culinary needs.

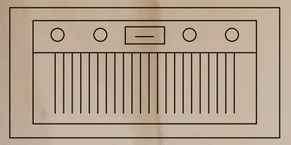

CUSTOM INSERT

Professional
48-INCH – VCIN48GWS

WALL HOODS

Professional & Masterpiece®

Home Connect

Professional

27-Inch Depth, 18-Inch Tall, Blowers Sold Separately

60-Inch – PH60GWS

54-Inch – PH54GWS

48-Inch – PH48GWS

42-Inch – PH42GWS

36-Inch – PH36GWS

Professional

24-Inch Depth, 18-Inch Tall, Blowers Sold Separately

48-Inch – PH48HWS

36-Inch – PH36HWS

30-Inch – PH30HWS

Home Connect

Masterpiece®

Includes Integrated Blower, 600 CFM

36-Inch – HMWB36WS

30-Inch – HMWB30WS

Home Connect

Masterpiece®

Includes Integrated Blower, 1000 CFM

48-Inch – HMWB481WS

36-Inch – HMWB361WS

Home Connect

Masterpiece®

Drawer-Style Hood with Integrated Blower, 600 CFM

36-Inch – HMDW36WS

30-Inch – HMDW30WS

WALL CHIMNEY HOODS

Professional & Masterpiece®

Professional

24-Inch Depth, Blowers Sold Separately

48-Inch – HPCN48WS

36-Inch – HPCN36WS

Home Connect

Masterpiece®

Low Profile Design with Integrated Blower, 600 CFM

36-Inch – HMCB36WS

30-Inch – HMCB30WS

Home Connect

Masterpiece®

Low Profile Design with Pull-Out Canopy, 600 CFM

36-Inch – HDDB36WS

30-Inch – HDDB30WS

See pages 136–141 for accessories

Visit Thermador.com for complete specifications or text a Thermador model number to 21432 to have specs sent to your phone

ISLAND HOODS

Professional & Masterpiece®

Home Connect

Professional

Low Profile Design, Blowers Sold Separately

54-Inch – HPIN54WS

42-Inch – HPIN42WS

Home Connect

Masterpiece®

Low Profile Design with Integrated Blower, 600 CFM

42-Inch – HMIB42WS

36-Inch – HMIB36WS

DOWNDRAFT

Masterpiece®

Masterpiece®

Deluxe 18-Inch Telescopic Design, Blowers Sold Separately

37-Inch – UCVP36XS

Masterpiece®

15-Inch Telescopic Design, Blowers Sold Separately

37-Inch – UCVM36XS

30-Inch – UCVM30XS

CUSTOM INSERTS

Professional & Masterpiece®

Home Connect

Professional

Blowers Sold Separately

60-Inch – VCIN60GWS

54-Inch – VCIN54GWS

48-Inch – VCIN48GWS

42-Inch – VCIN42GWS

36-Inch – VCIN36GWS

Home Connect

Masterpiece®

Integrated Blower, 300 Series

36-Inch – VCI3B36ZS

30-Inch – VCI3B30ZS

Integrated Blower, 600 Series

36-Inch – VCI6B36ZS

30-Inch – VCI6B30ZS

See pages 136–141 for accessories

Visit Thermador.com for complete specifications or text a Thermador model number to 21432 to have specs sent to your phone

PROFESSIONAL VENTILATION SELECTION GUIDE

Professional Collection Ranges and Rangetops

✓ = Perfect Fit ✓ = Viable Option

		36-Inch Pro Grand	48-Inch Pro Grand / Pro Grand Steam	60-Inch Pro Grand / Pro Grand Steam
		27-Inch Depth		
27-Inch Depth, 18-Inch Tall Wall Hoods	36-Inch PH36GWS	✓		
	42-Inch PH42GWS	✓		
	48-Inch PH48GWS		✓	
	54-Inch PH54GWS		✓	
	60-Inch PH60GWS			✓
23-Inch Depth, 11-Inch Tall Wall Hoods with Blower	36-Inch HMWB361WS	✓		
	48-Inch HMWB481WS		✓	
24-Inch Depth, 18-Inch Tall Wall Hoods	30-Inch PH30HWS			
	36-Inch PH36HWS	✓		
	48-Inch PH48HWS		✓	
24-Inch Depth Wall Chimney Hoods	36-Inch HPCN36WS	✓		
	48-Inch HPCN48WS		✓	
Island Hoods	42-Inch HPIN42WS	✓		
	54-Inch HPIN54WS		✓	
Custom Inserts	36-Inch VCIN36GWS	✓		
	42-Inch VCIN42GWS	✓		
	48-Inch VCIN48GWS		✓	
	54-Inch VCIN54GWS		✓	
	60-Inch VCIN60GWS			✓

For optimal performance, the width of the hood should equal that of the cooktop or rangetop or exceed it by 3 inches on either side. Install these hoods only with Thermador blowers.

PROFESSIONAL VENTILATION SELECTION GUIDE

Professional Collection Ranges and Rangetops

		30-Inch Pro Harmony (Dual-Fuel, Gas, and Induction)	36-Inch Pro Harmony (Dual-Fuel, Gas, and Induction)	48-Inch Pro Harmony	30-Inch Rangetop	36-Inch Rangetop	48-Inch Rangetop
		24-Inch Depth			24-Inch Depth		
27-Inch Depth, 18-Inch Tall Wall Hoods	36-Inch PH36GWS	✓	✓ ✓ (Induction Only)		✓	✓	
	42-Inch PH42GWS		✓			✓	
	48-Inch PH48GWS			✓			✓
	54-Inch PH54GWS			✓			✓
	60-Inch PH60GWS						
23-Inch Depth, 11-Inch Tall Wall Hoods with Blower	36-Inch HMWB361WS	✓	✓		✓	✓	
	48-Inch HMWB481WS			✓			✓
24-Inch Depth, 18-Inch Tall Wall Hoods	30-Inch PH30HWS	✓			✓		
	36-Inch PH36HWS	✓	✓		✓	✓	
	48-Inch PH48HWS			✓			✓
24-Inch Depth Wall Chimney Hoods	36-Inch HPCN36WS	✓	✓		✓	✓	
	48-Inch HPCN48WS			✓			✓
Island Hoods	42-Inch HPIN42WS	✓	✓		✓	✓	
	54-Inch HPIN54WS			✓			✓
Custom Inserts	36-Inch VCIN36GWS	✓	✓		✓	✓	
	42-Inch VCIN42GWS		✓			✓	
	48-Inch VCIN48GWS			✓			✓
	54-Inch VCIN54GWS			✓			✓
	60-Inch VCIN60GWS						

MASTERPIECE® VENTILATION SELECTION GUIDE

Masterpiece® Collection Cooktops and 30-Inch Professional Ranges and Rangetops

✓ = Perfect Fit ✓ = Viable Option

		30-Inch Induction Cooktop	36-Inch Induction Cooktop
23-Inch Depth, 11-Inch Tall Wall Hoods with Blower	30-Inch HMWB30WS†	✓	
	36-Inch HMWB36WS†	✓	✓
Under Cabinet Drawer Wall Hoods with Blower	30-Inch HMDW30WS†	✓	
	36-Inch HMDW36WS†	✓	✓
Wall Chimney Hoods with Blower	30-Inch HMCB30WS†	✓	
	36-Inch HMCB36WS†	✓	✓
Wall Chimney Drawer Hoods with Blower	30-Inch HDDB30WS†	✓	
	36-Inch HDDB36WS†	✓	✓
Island Hoods with Blower	36-Inch HMIB36WS†	✓	
	42-Inch HMIB42WS†	✓	✓
Custom Inserts	30-Inch VCI3B30ZS†	✓	
	30-Inch VCI6B30ZS†	✓	
	36-Inch VCI3B36ZS†	✓	✓
	36-Inch VCI6B36ZS†	✓	✓
Downdrafts	30-Inch UCVM30XS	✓	
	37-Inch UCVM36XS / UCVP36XS		✓

For optimal performance, the width of the hood should equal that of the cooktop or rangetop or exceed it by 3 inches on either side. Install these hoods only with Thermador Blowers.
†With the exception of Downdraft Ventilation, 30-Inch and 36-Inch Masterpiece Ventilation is also compatible with 30-Inch Pro Harmony Ranges and 30-Inch Professional Rangetops.

NOTE: Hood Sync between ventilation and cooktops is available only on Thermador Freedom® and Liberty® cooktops that feature Home Connect.

MASTERPIECE® VENTILATION SELECTION GUIDE

Masterpiece® Collection Cooktops and 30-Inch Professional Ranges and Rangetops

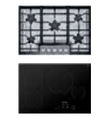 30-Inch Cooktop (Gas and Electric)	36-Inch Cooktop (Gas and Electric)	30-Inch Pro Harmony Range (Dual-Fuel, Gas, and Induction)	36-Inch Pro Harmony Range (Induction)	30-Inch Rangetop
✓		✓		✓
✓	✓	✓	✓	✓
✓		✓		✓
✓	✓	✓	✓	✓
✓		✓		✓
✓	✓	✓	✓	✓
✓		✓		✓
✓	✓	✓	✓	✓
✓		✓ (Induction Only)		
✓		✓		✓
✓	✓		✓	
✓	✓	✓	✓	✓
✓		✓ (Induction Only)		
	✓		✓	

PLANNING INFORMATION

Ventilation

Installation Considerations

Hood Width

The hood width should be no less than the width of the cooking surface. Where space is not restricted, a wider hood can be used to increase your capture area.

Distance from Cooking Surface

Proper mounting height is very important. If a hood is mounted too low, it may be difficult to cook and be unsafe. If a hood is mounted too high, performance may be compromised. For optimal performance, the distance from the cooking surface to the bottom of the hood should be a minimum of 30", unless otherwise noted. Please refer to the installation manual for each hood and cooktop / range model for proper hood mounting heights.

Available Ceiling Height

The standard ceiling height can vary from region to region and in homes built in different eras. Ceiling heights, even in the same room, can sometimes vary by as much as several inches. Kitchen ceiling heights can vary between 7'6" (or 90") to over 10' (or 120").

Before selecting a Thermador Hood, check the available installation space and any extra space that may remain after proper installation of a hood and cooktop or range. This extra space can be filled using Thermador stainless steel duct cover accessories or integrated with kitchen cabinetry. The space can also be adjusted by raising or lowering your hood within the recommended range (typically 30" to 36" above the cooking surface).

Choosing the Correct Blower

A variety of interior and exterior blower options (Remote, Inline or Integrated) are available for Thermador Professional and Masterpiece® Hoods. If the unit you have selected does not have a blower, one can be purchased separately. Blower selection will vary based on the volume of air that needs to be moved and the length and location of the duct run. For long duct runs with multiple turns and bends, consider using a more powerful blower. For the most efficient air flow exhaust, use a straight run or as few elbows as possible.

Remote Blowers (VTR Series)

Depending on your preference and ducting situation, these blowers can be mounted on the roof or exterior wall of your home. An exterior installation may be more appealing to reduce noise in the kitchen.

Inline Blowers (VTI Series)

To minimize noise in the kitchen, these blowers are mounted along the duct line anywhere between the kitchen and the exterior wall. If you have easy access to your duct line (in an attic, for example), this may be an appealing option.

Integrated Blowers (VTN series)

These blowers are purchased separately and integrated into the hood or onto the downdraft unit at the time of installation. This option allows you to select your ideal hood with the exact power you require. Integrated blowers are included with HPWB30FS, HPWB36FS and HPWB48FS.

SPECIAL NOTE: Always allow access to the blower for serviceability, should it be needed.

Choosing the Right CFM

The power of the cooktop or range, measured in BTU, is perhaps the most important factor in determining CFM needs for a hood.

You should also consider the cooking space and cooking style of your client.

- More demanding cooks usually require more exhaust capacity to handle moisture generated by boiling large pots of water or the grease and smoke resulting from grilling or frying. This cooking style could require a hood or downdraft system with airflow of 600 to 1,300 CFM.
- For those who are used to preparing quick meals in a relatively small kitchen, a hood with 400 CFM may be adequate ventilation for the cooking space.
- If the cooking surface is in a peninsula or island, a larger capacity hood can provide better capture when there are cross currents and when the hood needs to be mounted higher. Downdraft ventilation systems are also a good alternative.
- High heat cooking or aromatic foods may require additional CFM. Increasing capture area by 3" on each side is also a recommended way to address this issue.

Length and Size of Duct Work

Do not use flexible duct; it creates back pressure / air turbulence and reduces performance.

Straight runs and gradual turns are best. Use the shortest route with the fewest turns possible.

Proper performance is dependent upon proper ducting. Use a qualified and trained installer. Local building codes may require the use of make-up air systems when using ducted ventilation systems greater than specified CFM of air movement. The specified CFM varies from locale to locale. Consult your HVAC professional for specific requirements in your area.

If using a 10" duct, Thermador recommends not exceeding 50 feet of duct. Transitions, elbows and wall or roof caps are all factors that will add more static pressure, therefore increasing your equivalent duct run.

Visit Thermador.com for complete specifications or text a Thermador model number to 21432 to have specs sent to your phone

BLOWER AND DUCT SELECTION GUIDE

ACCESSORIES

	Blower Information						*Hood Information*		
	Type	Model #	CFM	Max. Total Amps (120V, 60Hz)	Roofplate Required	Duct Size at Blower	Transition w/Backdraft Damper	Duct Size at Discharge	Discharge Direction
Wall Hoods – Professional									
60" – PH60GWS 54" – PH54GWS 48" – PH48GWS 42" – PH42GWS	Remote	VTR2FZ	1000	16.3	RFPLT1000P	10-inch	Included	10-inch	Vertical, Horizontal
	Inline	VTI2FZ			—				
	Integrated	VTN2FZ		14.7					
36" – PH36GWS	Remote	VTR2FZ	1000	15.5	RFPLT1000P	10-inch	Included	10-inch	Vertical, Horizontal
	Inline	VTI2FZ			—				
	Integrated	VTN2FZ		13.9					
48" – PH48HWS	Remote	VTR2FZ	1000	11.1	RFPLT1000P	10-inch	Included	10-inch	Vertical, Horizontal
	Inline	VTI2FZ			—				
	Integrated	VTN2FZ		9.5					
36" – PH36HWS	Remote	VTR2FZ	1000	10.3	RFPLT1000P	10-inch	Included	10-inch	Vertical, Horizontal
	Inline	VTI2FZ			—				
	Integrated	VTN2FZ		8.7					
30" – PH30HWS	Remote	VTR1FZ	600	5.7	RFPLT600P	6-inch	Included	10-inch	Vertical, Horizontal
		VTR2FZ	1000	10.3	RFPLT1000P	10-inch			
	Inline	VTI1FZ	600	5.7	—	6-inch			
		VTI2FZ	1000	10.3		10-inch			
	Integrated	VTN1DZ	400	3.3		6-inch			
		VTN2FZ	1000	8.7		10-inch			
Wall Hoods – Masterpiece®									
36" – HMWB36WS Use Recirculation Kit RECHMWB36 30" – HMWB30WS Use Recirculation Kit RECHMWB30	Integrated	Included	600	3.4	—	10-inch	Included	10-inch	Vertical
48" – HMWB481WS 36" – HMWB361WS	Integrated	Included	1000	7.6	—	10-inch	Included	10-inch	Vertical
36" – HMDW36WS 30" – HMDW30WS Use Recirculation Kit RECHMDW30 or RECHMDW36	Integrated	Included	600	3.4	—	6-inch	Included	10-inch	Vertical

BLOWER AND DUCT SELECTION GUIDE

ACCESSORIES

	Blower Information						Hood Information		
	Type	Model #	CFM	Max. Total Amps (120V, 60Hz)	Roofplate Required	Duct Size at Blower	Transition w/Backdraft Damper	Duct Size at Discharge	Discharge Direction
Wall Chimney Hoods – Professional									
48" – HPCN48WS	Remote	VTR2FZ	1000	11.1	RFPLT1000P	10-inch	Included	10-inch	Vertical
	Inline	VTI2FZ			—				
	Integrated	VTN2FZ		9.5					
36" – HPCN36WS	Remote	VTR2FZ	1000	10.3	RFPLT1000P	10-inch	Included	10-inch	Vertical
	Inline	VTI2FZ			—				
	Integrated	VTN2FZ		8.7					
Wall Chimney Hoods – Masterpiece®									
36" – HMCB36WS 30" – HMCB30WS Use Recirculation Kit RECHMCB	Integrated	Included	600	4.9	—	6-inch	Included	6-inch	Vertical
36" – HDDB36WS 30" – HDDB30WS Use Recirculation Kit RECHDDB	Integrated	Included	600	4.9	—	6-inch	Included	6-inch	Vertical

	Blower Information						Hood Information		
	Type	Model #	CFM	Max. Total Amps (120V, 60Hz)	Roofplate Required	Duct Size at Blower	Transition w/Backdraft Damper	Duct Size at Discharge	Discharge Direction
Island Hoods – Professional									
54" – HPIN54WS 42" – HPIN42WS	Remote	VTR2FZ	1000	11.1	RFPLT1000P	10-inch	Included	6-inch	Vertical
	Inline	VTI2FZ			—				
Island Hoods – Masterpiece®									
42" – HMIB42WS 36" – HMIB36WS Use Recirculation Kit RECHMIB	Integrated	Included	600	5.2	—	6-inch	Included	6-inch	Vertical

BLOWER AND DUCT SELECTION GUIDE

ACCESSORIES

	Blower Information						Hood Information		
	Type	Model #	CFM / Series	Max. Total Amps (120V, 60Hz)	Roofplate Required	Duct Size at Blower	Transition w/Backdraft Damper	Duct Size at Discharge	Discharge Direction
Custom Inserts – Professional									
60" – VCIN60GWS 54" – VCIN54GWS 48" – VCIN48GWS	Remote	VTR2FZ	1000	11.1	RFPLT1000P	10-inch	Included	10-inch	Vertical
	Inline	VTI2FZ			—				
	Integrated	VTN2FZ		9.5					
42" – VCIN42GWS	Remote	VTR2FZ	1000	11.1	RFPLT1000P	10-inch	Included	10-inch	Vertical
	Inline	VTI2FZ			—				
	Integrated	VTN2FZ		9.5					
36" – VCIN36GWS Use Recirculation Kit CHFVCI30ZS	Remote	VTR2FZ	1000	10.3	RFPLT1000P	10-inch	Included	10-inch	Vertical
	Inline	VTI2FZ			—				
	Integrated	VTN2FZ		8.7					
Custom Inserts – Masterpiece®									
30" – VCI3B30ZS Use Recirculation Kit CHFVCI30ZS	Integrated	Included	300	2.4	—	6-inch	Included	6-inch	Vertical
36" – VCI3B36ZS Use Recirculation Kit CHFVCI36ZS	Integrated	Included	300	3.3	—	6-inch	Included	6-inch	Vertical
30" – VCI6B30ZS Use Recirculation Kit CHFVCI30ZS	Integrated	Included	600	2.4	—	8-inch	Included	8-inch	Vertical
36" – VCI6B36ZS Use Recirculation Kit CHFVCI36ZS	Integrated	Included	600	3.3	—	8-inch	Included	8-inch	Vertical

BLOWER AND DUCT SELECTION GUIDE

ACCESSORIES

		Blower Information					Hood Information		
	Type	Model #	CFM	Max. Total Amps (120V, 60Hz)	Roofplate Required	Duct Size at Blower	Transition w/Backdraft Damper	Duct Size at Discharge	Discharge Direction**
Downdraft Hoods – Masterpiece®									
36" – UCVM36XS Use Recirculation Kit UCVRECIRC with Induction / Electric Cooktops Only	Remote	VTR1FZ	600	3.25	RFPLT600P	6-inch	CVTSIDE6* CVTFRONT6	6-inch	Left / Right / Rear / Front
		VTR2FZ	1000	5.5	RFPLT1000P	10-inch	CVTSIDE10* CVTFRONT10	10-inch	
	Inline	VTI1FZ	600	2.95	—	6-inch	CVTSIDE6* CVTFRONT6	6-inch	
		VTI2FZ	1000	5.49	—	10-inch	CVTSIDE10* CVTFRONT10	10-inch	
	Flexible	VTD600P	600	4.5	—	8-inch	CVTSIDE8* CVTFRONT8	8-inch	
36" – UCVP36XS Use Recirculation Kit UCVRECIRC with Induction / Electric Cooktops Only	Remote	VTR1FZ	600	3.4	RFPLT600P	6-inch	CVTSIDE6* CVTFRONT6	6-inch	Left / Right / Rear / Front
		VTR2FZ	1000	5.5	RFPLT1000P	10-inch	CVTSIDE10* CVTFRONT10	10-inch	
	Inline	VTI1FZ	600	3.1	—	6-inch	CVTSIDE6* CVTFRONT6	6-inch	
		VTI2FZ	1000	5.64	—	10-inch	CVTSIDE10* CVTFRONT10	10-inch	
	Flexible	VTD600P	600	4.5	—	8-inch	CVTSIDE8* CVTFRONT8	8-inch	
30" – UCVM30XS Use Recirculation Kit UCVRECIRC with Induction / Electric Cooktops Only	Remote	VTR1FZ	600	3.1	RFPLT600P	6-inch	CVTSIDE6* CVTFRONT6	6-inch	Left / Right / Rear / Front
		VTR2FZ	1000	5.25	RFPLT1000P	10-inch	CVTSIDE10* CVTFRONT10	10-inch	
	Inline	VTI1FZ	600	2.86	—	6-inch	CVTSIDE6* CVTFRONT6	6-inch	
		VTI2FZ	1000	5.39	—	10-inch	CVTSIDE10* CVTFRONT10	10-inch	
	Flexible	VTD600P	600	4.5	—	8-inch	CVTSIDE8* CVTFRONT8	8-inch	

*CVDUCT2 transition required to directly connect CVDUCT2 to sides or rear of downdraft housing. Can be used as an extension to exhaust through a cabinet or wall, and can be cut to modify length. For use with installation of inline or remote blower applications with CVTSIDE6, CVTSIDE8 and CVTSIDE10.

**CVTRECT2 transition required to connect CVDUCT2 rectangular duct to downdraft housing at left, right or rear

Visit Thermador.com for complete specifications or text a Thermador model number to 21432 to have specs sent to your phone

BLOWER DIMENSIONS

Planning Information

Remote Blowers

(Mounted to Roof or External Wall)

VTR1FZ

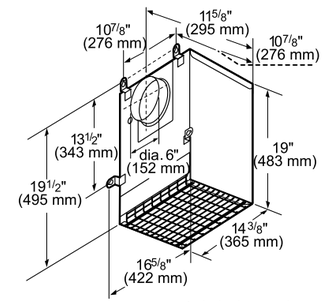

measurements in inches and mm

VTR2FZ

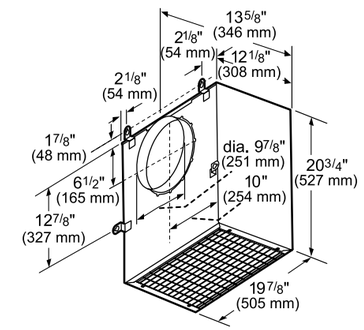

measurements in inches and mm

Flexible Blower

VTD600P

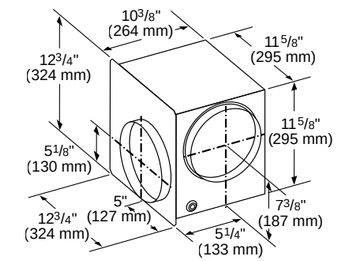

measurements in inches (mm)

Inline Blowers

(Mounted Between Kitchen and External Wall)

VTI1FZ

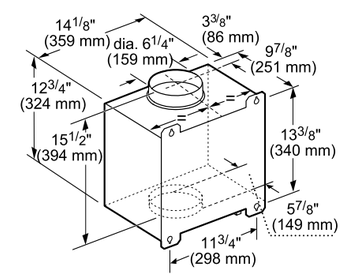

measurements in inches and mm

VTI2FZ

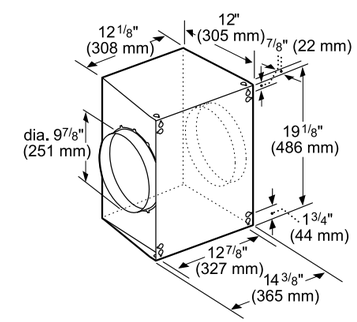

measurements in inches and mm

Integrated Blowers

(Mounted in Hood)

VTN1DZ

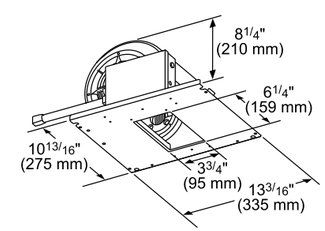

measurements in inches (mm)

VTN2FZ

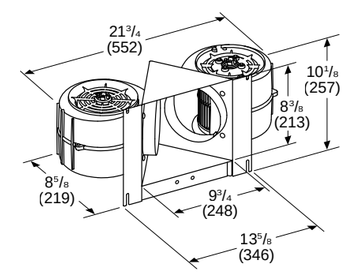

Measurements in inches (mm)

BLOWER OPTIONS AND PRESSURE CURVES

Planning Information

Remote Blowers

(Mounted to Roof or External Wall)

VTR1FZ – 6" Duct

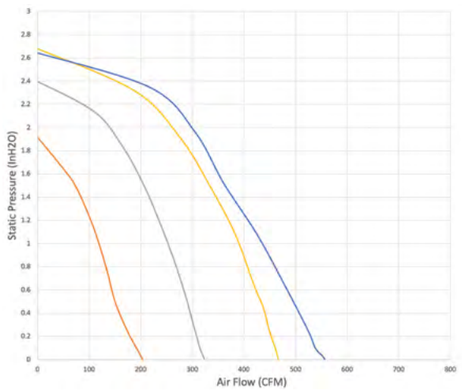

VTR2FZ – 10" Duct

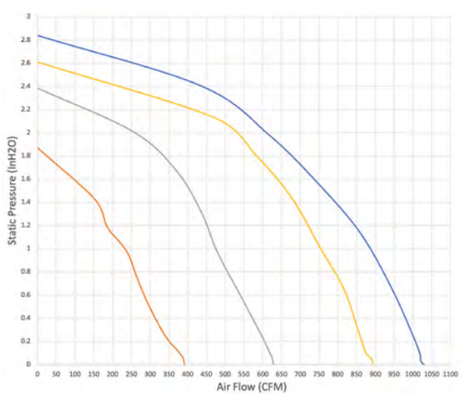

*Inline Blowers**

(Mounted Between Kitchen and External Wall)

VTI1FZ – 6" Duct

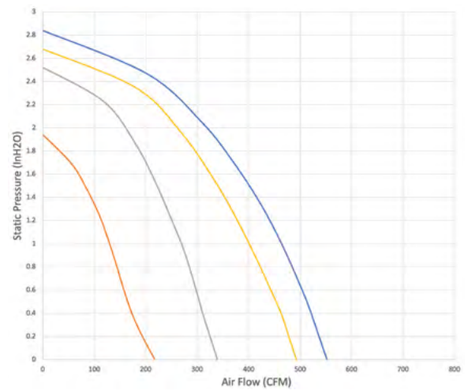

VTI2FZ – 10" Duct

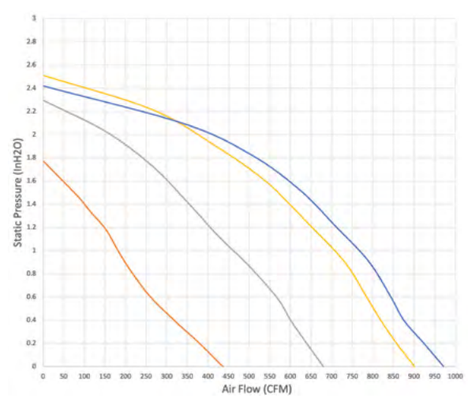

Speed 1
Speed 2
Speed 3
Speed 4

NOTE: All measurements are made with at least 2 ft. of straight length ducting. These are NOT free blowing measurements.

*Inline blower can be used as an integrated solution. Refer to installation manual for details.

Visit Thermador.com for complete specifications or text a Thermador model number to 21432 to have specs sent to your phone

BLOWER OPTIONS AND PRESSURE CURVES

Planning Information

Integrated Blowers

(Mounted in Hood)

*VTN1DZ – 6" Duct**

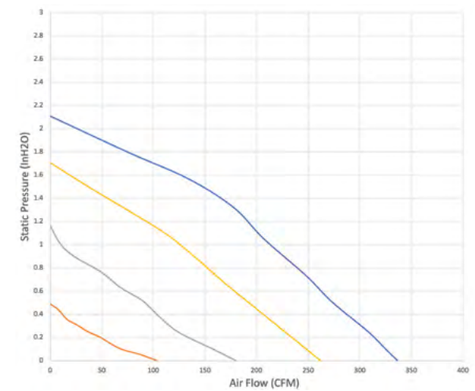

*VTN2FZ – 10" Duct***

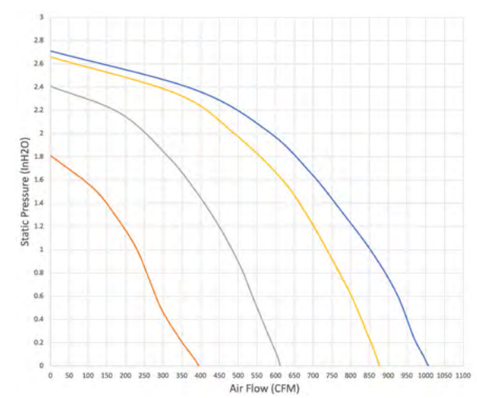

Flexible Blower

VTD600P

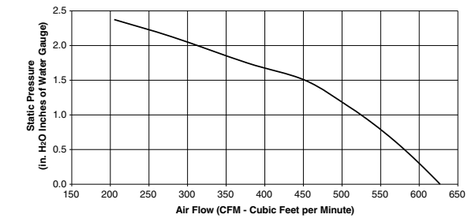

Speed 1
Speed 2
Speed 3
Speed 4

NOTE: All measurements are made with at least 2 ft. of straight length ducting. These are NOT free blowing measurements.

*Tested in a 30" Wall Hood with 6" duct connection
**Tested in a 48" Wall Hood with 10" duct connection

Visit Thermador.com for complete specifications or text a Thermador model number to 21432 to have specs sent to your phone

REMOTE BLOWER ACCESSORIES

Planning Information

Roofplates

RFPLT600P

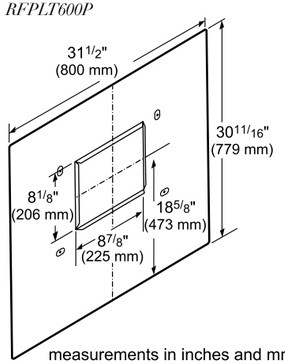

measurements in inches and mm

RFPLT1000P

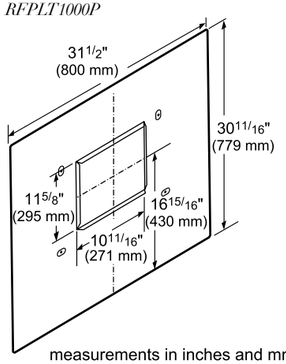

measurements in inches and mm

Roofplate Material Combinations

Roofplate	Remote Blower
RFPLT600P	VTR1FZ
RFPLT1000P	VTR2FZ

25 ft. Blower Connector Cable

For use with the following inline and remote blowers: VTI1FZ, VTI2FZ, VTR1FZ, VTR2FZ

EXTNCB25W

Visit Thermador.com for complete specifications or text a Thermador model number to 21432 to have specs sent to your phone

EQUIVALENT DUCT LENGTHS FOR COMMONLY USED TRANSITIONS

Planning Information

Duct Piece	*Size of Duct Piece (In.)*	*Equivalent Length (Ft.)*
Smooth Straight	6	1.2
	7	0.95
	8	0.7
	10	0.6
3 1/4" x 10" Straight	N/A	1
3 1/4" x 14" Straight	N/A	0.7
90° Elbow Round	6	12
	7	8
	8	6
45° Elbow Round	6	5
	7	4
	8	3
3 1/4" x 10" 90° Elbow Round	N/A	5
3 1/4" x 10" 45° Elbow Round	N/A	15
3 1/4" x 10" Flat Elbow	N/A	20
Round to 3 1/4" x 10"	6	1
	7	1
3 1/4" x 10" to Round	6	5
	7	3
Round to 3 1/4" x 10" 90° Elbow	6	10
	7	8

Duct Piece	*Size of Duct Piece (In.)*	*Equivalent Length (Ft.)*
3 1/4" x 10" to Round 90° Elbow	6	10
	7	5
3 1/4" x 10" Center Reverse Elbow Left	N/A	15
3 1/4" x 10" Center Reverse Elbow Right	N/A	25
3 1/4" x 10" Left Reverse Elbow	N/A	15
3 1/4" x 10" Right Reverse Elbow	N/A	25
Round Wall Cap	6	2
	7	2
	8	2
	10	2
Round Roof Cap	6	2
	7	2
	8	2
2' Long 3 1/4" x 10" Flex	N/A	20
3 1/4" x 10" to Round	10	1
7" Inline Backdraft Damper	7	
3 1/4" x 10" Roof Jack and Shutter	N/A	

NOTE: These commonly used installation parts can be purchased at a local hardware store. Thermador does not manufacture all these parts.

WALL HOODS
ACCESSORIES

Built-In Remote Control Panel

Convenience at your fingertips: The remote control accessory offers the freedom to extend your hood controls to a more reachable spot

REMCPW

measurements in inches (mm)

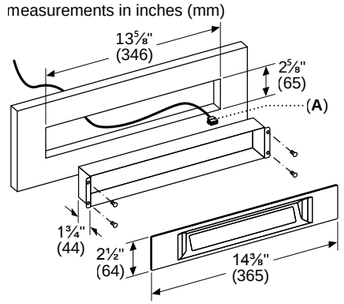

A: DBus Cable length: 30 feet (9180 mm)

Recirculation Kits

For 36" HMWB36WS only

RECHMWB36

For 30" HMWB30WS only

RECHMWB30

For under cabinet drawer hoods only

RECHMDW30 – HMDW30WS

RECHMDW36 – HMDW36WS

Replacement Charcoal Filters

For use with recirculation kit RECHMWB30 and RECHMWB36

00674939 (Service Part #)

For use with recirculation kits RECHMDW30 and RECHMDW36

CHFHMDW30 – 30-Inch

CHFHMDW36 – 36-Inch

25 ft. Blower Connector Cable

For use with the following inline and remote blowers: VTI1FZ, VTI2FZ, VTR2FZ

EXTNCB25W

Duct Covers

	Professional			*Masterpiece®*	
	6-Inch Tall	8-Foot – 9-Foot Ceiling Telescoping	10-Foot – 12-Foot Ceiling Telescoping	16-Inch Tall	28-Inch – 65-Inch Tall
48-Inch	DC486W	DC4889W	DCT481012W	DCT4816W	DC48MTW
42-Inch	DC426W	DC4289W	—	—	—
36-Inch	DC366W	DC3689W	DCT361012W	DCT3616W	DC36MTW
30-Inch	DC306W	DC3089W	—	DCT3016W	DC30MTW

Lighting

SKU	Included	Bulb Type
PH__GWS	Yes	12VDC, 3 W, LED Lamp
PH__HWS	Yes	
HMWB__WS	Yes	
HMDW__WS	Yes	

Visit Thermador.com for complete specifications or text a Thermador model number to 21432 to have specs sent to your phone

ISLAND HOODS
ACCESSORIES

Built-In Remote Control Panel

Convenience at your fingertips: The remote control accessory offers the freedom to extend your hood controls to a more reachable spot

REMCPW

measurements in inches (mm)

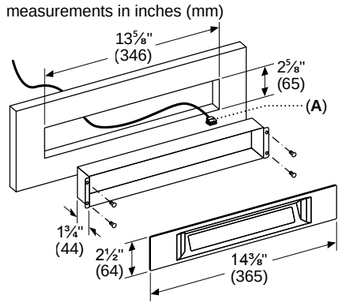

A: DBus Cable length: 30 feet (9180 mm)

Stainless Steel Island Hood Extension

For up to 12-foot ceiling applications. Extension replaces upper section of standard chimney extension.

CHXTHMIB

Recirculation Kit

For HMIB36WS and HMIB42WS Masterpiece® Island Hoods only

RECHMIB

Replacement Charcoal Filter

For use with recirculation kit RECHMIB

CHFHMCD

25 ft. Blower Connector Cable

For use with the following inline and remote blowers: VTI2FZ, VTR2FZ

EXTNCB25W

Lighting

SKU	Included	Bulb Type
HPIN__WS	Yes	12VDC, 3 W, LED Lamp
HMIB__WS	Yes	

WALL CHIMNEY HOODS

ACCESSORIES

Built-In Remote Control Panel

Convenience at your fingertips: The remote control accessory offers the freedom to extend your hood controls to a more reachable spot

REMCPW

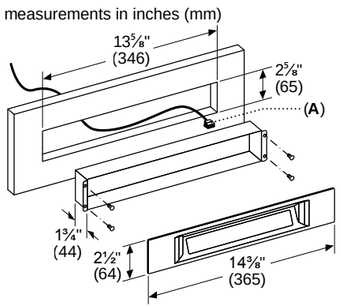

A: DBus Cable length: 30 feet (9180 mm)

Stainless Steel Chimney Hood Extensions

For up to 12-foot ceiling applications. Extension replaces upper section of standard chimney extension.

CHXTHMCB – For HMCB30WS and HMCB36WS only

CHXTHDDW – For HDDB30WS and HDDB36WS only

Recirculation Kits

For HMCB30WS and HMCB36WS Masterpiece® Wall Chimney Hoods only

RECHMCB

For HDDB30WS and HDDB36WS Masterpiece® Wall Chimney Drawer Hoods only

RECHDDB

Replacement Charcoal Filters

For use with recirculation kits RECHMCB and RECHDDB

CHFHMCD

25 ft. Blower Connector Cable

For use with the following inline and remote blowers: VTI2FZ, VTR2FZ

EXTNCB25W

Lighting

SKU	Included	Bulb Type
HPCN__WS	Yes	12VDC, 3 W, LED Lamp
HMCB__WS	Yes	
HDDB__WS	Yes	

Duct Covers

6" Tall Duct Cover

CHMHP486W

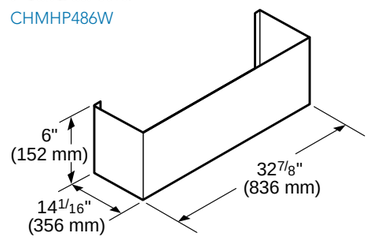

Standard duct cover for up to 8-foot ceiling heights

18" – 35" Tall Telescoping Duct Cover

CHMHP48TW

Telescoping design for extension up to 9-foot to 10-foot ceiling heights

42" – 59" Tall Telescoping Duct Cover

CHMHP48XTW

Telescoping design for extension up to 11-foot to 12-foot ceiling heights

Duct Covers

6" Tall Duct Cover

CHMHP366W

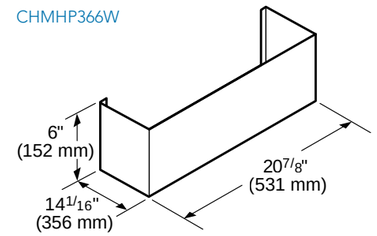

Standard duct cover for up to 8-foot ceiling heights

18" – 35" Tall Telescoping Duct Cover

CHMHP36TW

Telescoping design for extension up to 9-foot to 10-foot ceiling heights

42" – 59" Tall Telescoping Duct Cover

CHMHP36XTW

Telescoping design for extension up to 11-foot to 12-foot ceiling heights

CUSTOM INSERTS

ACCESSORIES

Important Note:

VCIN_GWS series custom insert models include hood trim pieces to complete the installation.

Built-In Remote Control Panels

Convenience at your fingertips: The remote control accessory offers the freedom to extend your hood controls to a more reachable spot.

For use with VCIN_GWS custom inserts only

REMCPW

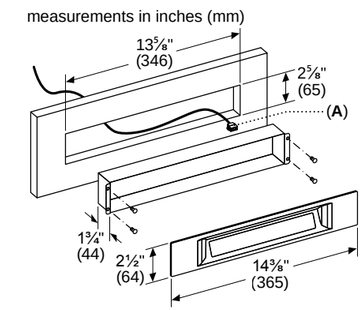

A: DBus Cable length: 30 feet (9180 mm)

25 ft. Blower Connector Cable

For use with the following inline and remote blowers: VTI2FZ, VTR2FZ

EXTNCB25W

3-Piece Extension Adaptor Set

EXTNSET4

Lighting

SKU	Included	Bulb Type
VCIN__GWS	Yes	12VDC, 3 W, LED Lamp
VCI3B3_ZS	Yes	12VDC, 3 W, LED Lamp
VCI6B30_ZS	Yes	12VDC, 3 W, LED Lamp

Recirculation Kits / Replacement Charcoal Filter Set

For VCI3B30ZS and VCI6B30ZS Masterpiece® Custom Inserts only

CHFVCI30ZS

For VCI3B36ZS and VCI6B36ZS Masterpiece® Custom Inserts only

CHFVCI36ZS

DOWNDRAFT HOODS

ACCESSORIES

Recirculation Kit

Use with induction / electric cooktops only

UCVRECIRC

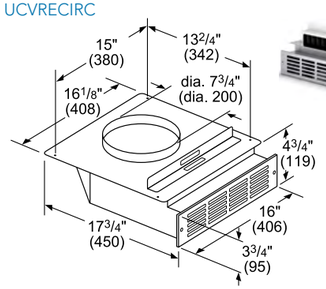

Measurements in inches and (mm)

Replacement Charcoal Filter

UCVFILTER

25 ft. Blower Connector Cable

For use with the following inline and remote blowers: VTI1FZ, VTI2FZ, VTR1FZ, VTR2FZ

Cannot be connected together to extend length.

EXTNCB25W

5 ft. Electrical Panel Extension Cable

This cable extends 5 ft. to move the electrical panel out of the way to offer full installation flexibility in any ducting scenario while installing the downdraft. Ability to connect two cables together to make a 10 ft. cable.

Cannot be used to connect inline or remote blowers.

EXTNCE5

Downdraft Gas Cooktop Seal Trim Kits

Required for installation with Gas Cooktops

UCV36ST – 37-Inch

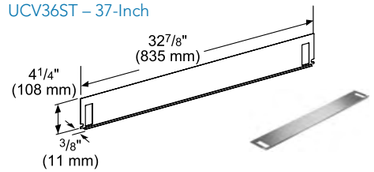

measurements in inches (mm)

UCV30ST – 30-Inch

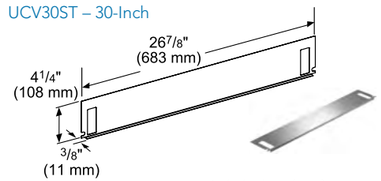

measurements in inches (mm)

Remote and Inline Blower Downdraft Transitions

CVTSIDE6	6" Side / Rear Transition
CVTSIDE8	8" Side / Rear Transition
CVTSIDE10	10" Side / Rear Transition
CVTFRONT6	6" Round Front Plate
CVTFRONT8	8" Round Front Plate
CVTFRONT10	10" Round Front Plate
CVDUCT2	2' Rectangular Duct
CVTRECT2	Transition for Rectangular Duct

Lighting

SKU	Included	Bulb Type
UCVP36XS	Yes	LED Strip

Visit Thermador.com for complete specifications or text a Thermador model number to 21432 to have specs sent to your phone

DOWNDRAFT HOODS

ACCESSORIES

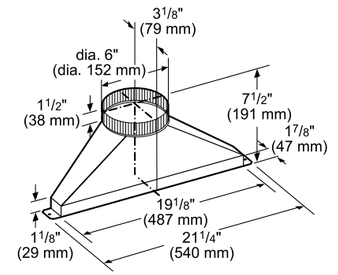

measurements in inches (mm)

CVTSIDE6

6" round transition allows for left, right, or rear venting. Use with inline and remote blowers, and ducting with 6" round duct connections.

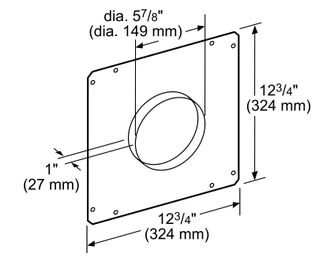

measurements in inches (mm)

CVTFRONT6

6" front rough-in plate allows for front venting. Use with inline and remote blowers, and ducting with 6" round duct connections.

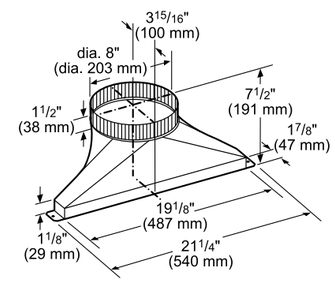

measurements in inches (mm)

CVTSIDE8

8" round transition allows for left, right, or rear or downward venting. Use with VTD600P blower as an inline installation, and ducting with 8" round duct connections.

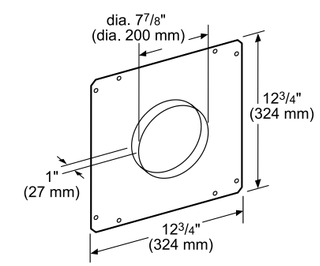

measurements in inches (mm)

CVTFRONT8

8" round front plate allows for front downward venting. Use with VTD600P blower as an inline installation, and ducting with 8" round duct connections.

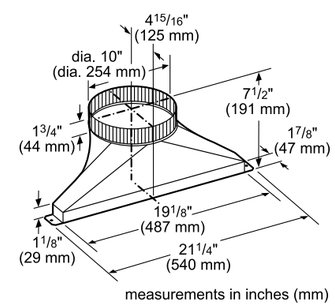

measurements in inches (mm)

CVTSIDE10

10" round transition allows for left, right, or rear venting. Use with inline and remote blowers, and ducting with 10" round duct connections.

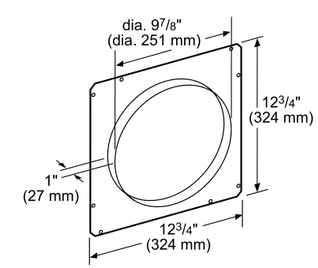

measurements in inches (mm)

CVTFRONT10

10" front rough-in plate allows for front venting. Use with inline and remote blowers, and ducting with 10" round duct connections.

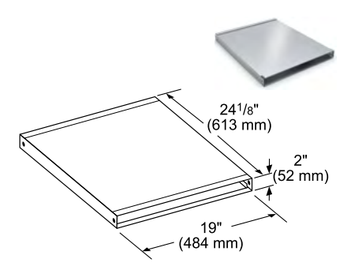

measurements in inches (mm)

CVDUCT2

Rectangular 2 ft. long x 1 7/8 in deep x 19 in wide duct. CVDUCT2 transition required to directly connect CVDUCT2 to sides or rear of downdraft housing. Can be used as an extension to exhaust through a cabinet or wall, and can be cut to modify length. For use with installation of inline or remote blower applications with CVTSIDE6, CVTSIDE8, and CVTSIDE10.

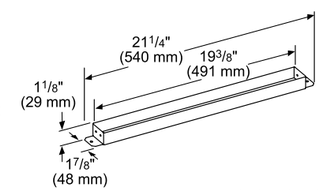

measurements in inches (mm)

CVTRECT2

Transition required to connect CVDUCT2 rectangular duct to downdraft housing at left, right, or rear.

PLANNING INFORMATION

Wall Hoods

Model Options

When selecting a ventilation system, choose from one of our two sophisticated appliance collections. Select from the Professional Collection for the ultimate in cooking and venting power or the Masterpiece® Collection for its sleek styling and numerous convenience functions. Thermador Wall Hoods are available in various depths and heights to fit your kitchen plans and are meticulously crafted for both function and design. Be sure to reference the correct model information in this design guide.

Electrical Specifications

Be sure your Thermador Wall Hood is properly installed and grounded by a qualified technician. Installation, electrical connections and grounding must comply with all applicable local codes.

Install a suitable conduit box (not furnished). An appropriately-sized, UL-listed conduit connector must be used to correctly attach the conduit to the junction box. Remote blowers require a 5-wire installation.

Installation Considerations

The information in this design guide provides key features, product dimensions, cutouts and installation specifications. Before installing a Thermador Wall Hood, be sure to verify the cutout dimensions and electrical connections. Installation instructions are subject to change. Always consult with the installation manual included with the product for complete details prior to the installation.

Installation Options

Thermador Wall Hoods may be installed above a Thermador Range or Cooktop to create a convenient cooking center. Refer to the ventilation selection guide for compatibility.

Hood installation height above a range or cooktop can vary. To obtain the necessary installation height above a Thermador Range or Cooktop, consult the appliance's installation manual. Accessory 6" and / or 12" tall duct covers are used to fill the space between the hood and ceiling.

Thermador Wall Hoods can be mounted on a wall or suspended from a cabinet. The cabinet must be structurally joined to the wall studs to support the weight of this hood.

Electric Load (120V, 60Hz)

		Remote Blower		*Inline Blower*		*Integrated Blower*	
		VTR1FZ	*VTR2FZ*	*VTI1FZ*	*VTI2FZ*	*VTN1DZ*	*VTN2FZ*
PH60GWS, PH54GWS, PH48GWS, PH42GWS	Amps	—	16.3	—	16.3	—	14.7
	Watts	—	1,956	—	1,956	—	1,764
PH36GWS	Amps	—	15.5	—	15.5	—	13.9
	Watts	—	1,860	—	1,860	—	1,668
PH48HWS	Amps	—	11.1	—	11.1	—	9.5
	Watts	—	1,956	—	1,956	—	1,764
PH36HWS	Amps	—	10.3	—	10.3	—	8.7
	Watts	—	1,236	—	1,236	—	1,044
PH30HWS	Amps	5.7	10.3	5.7	10.3	3.3	8.7
	Watts	684	1,236	684	1,236	396	1,044
HMWB36WS, HMWB30WS	Amps	—	—	—	—	Blower Included, 3.4	
HMWB481WS, HMWB361WS	Amps	—	—	—	—	Blower Included, 7.6	
HMDW36WS, HMDW30WS	Amps	—	—	—	—	Blower Included, 3.4	

INSTALLATION

Wall Hoods

PH60GWS

27-Inch Depth Wall Hood (60-Inch Width)

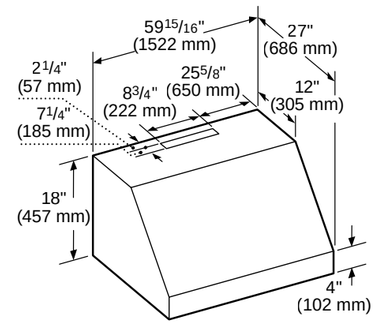

measurements in inches (mm)

PH54GWS

27-Inch Depth Wall Hood (54-Inch Width)

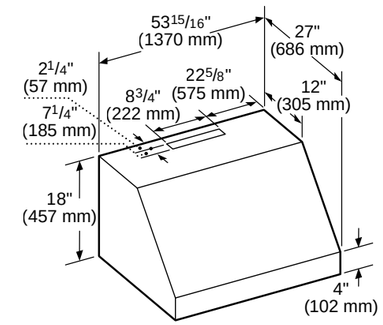

measurements in inches (mm)

PH48GWS

27-Inch Depth Wall Hood (48-Inch Width)

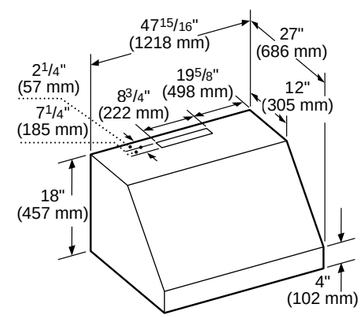

measurements in inches (mm)

PH42GWS

27-Inch Depth Wall Hood (42-Inch Width)

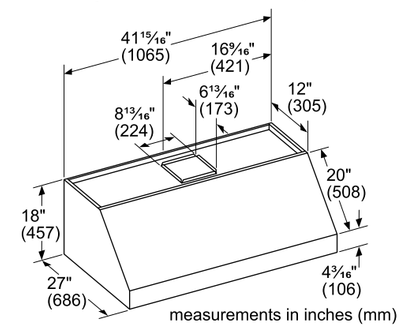

measurements in inches (mm)

PH36GWS

27-Inch Depth Wall Hood (36-Inch Width)

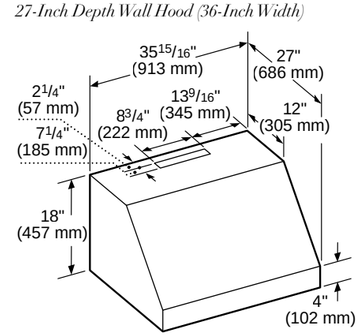

measurements in inches (mm)

INSTALLATION

Wall Hoods

PH48HWS

24-Inch Depth Wall Hood (48-Inch Width)

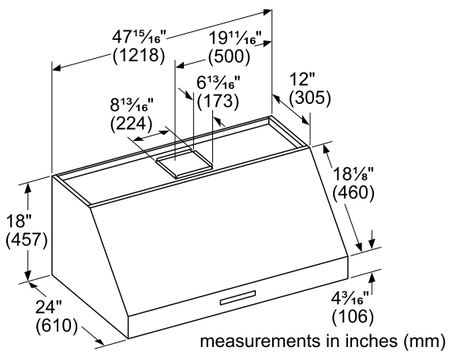

PH36HWS

24-Inch Depth Wall Hood (36-Inch Width)

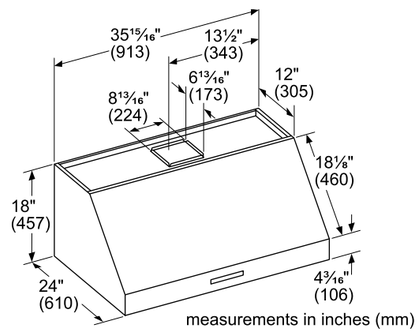

PH30HWS

24-Inch Depth Wall Hood (30-Inch Width)

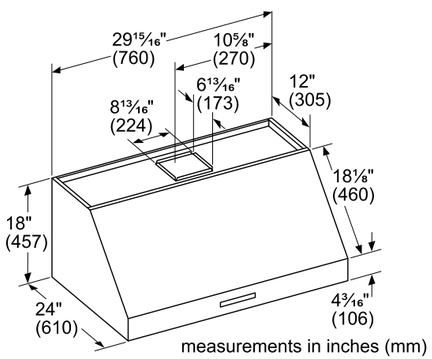

HMWB36WS

Low-Profile Wall Hood With Blower (36-Inch Width)

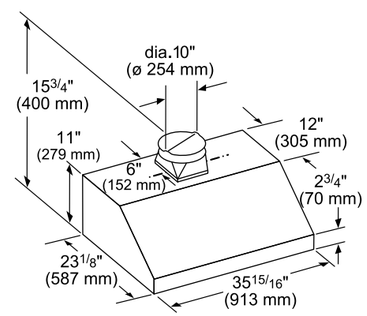

HMWB30WS

Low-Profile Wall Hood With Blower (30-Inch Width)

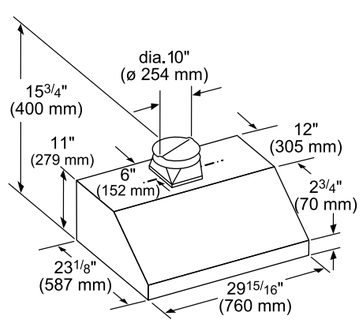

HMWB481WS

Low-Profile Wall Hood With Blower (48-Inch Width)

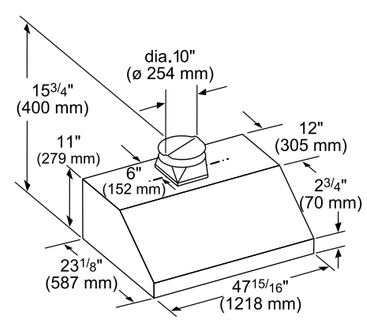

INSTALLATION

Wall Hoods

HMWB361WS

Low-Profile Wall Hood With Blower (36-Inch Width)

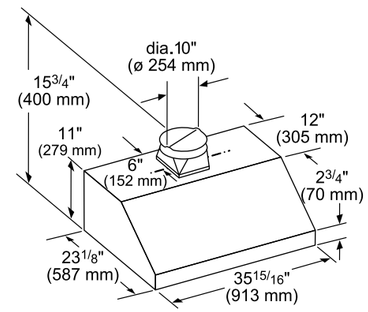

HMDW36WS

Under Cabinet Drawer Wall Hood With Blower (36-Inch Width)

*Minimum Cabinet inside height: 24" (610 mm)

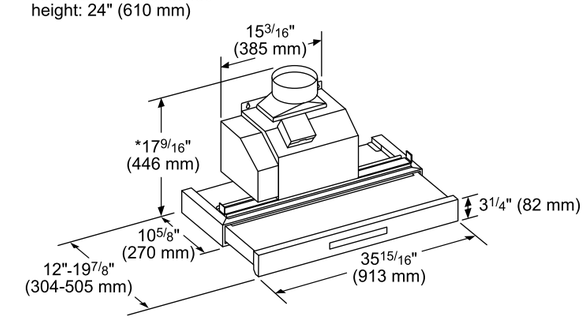

HMDW30WS

Under Cabinet Drawer Wall Hood With Blower (30-Inch Width)

*Minimum Cabinet inside height: 24" (610 mm)

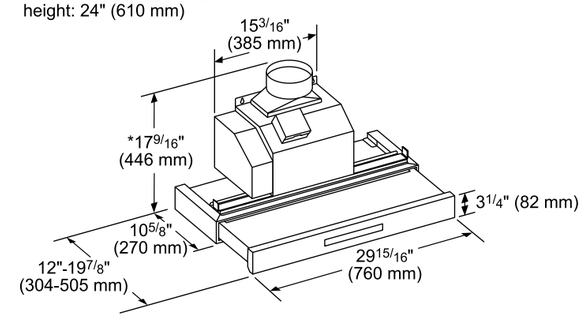

Visit Thermador.com for complete specifications or text a Thermador model number to 21432 to have specs sent to your phone

PLANNING INFORMATION

Wall Chimney Hoods

Model Options

Thermador Wall Chimney Hoods feature sleek styling and numerous convenience functions. Wall Chimney Hoods are available in 30-inch, 36-inch and 48-inch widths and are adjustable to suit a range of ceiling heights. All stainless steel or stainless steel with glass designs are available. Be sure to reference the correct model information in this design guide.

Electrical Specifications

Be sure your Thermador Wall Chimney Hood is properly installed and grounded by a qualified technician. Installation, electrical connections and grounding must comply with all applicable local codes.

If possible, site the earthed socket directly behind the chimney paneling. The grounded socket should be connected via its own circuit. If the grounded socket is no longer accessible following installation of the hood, ensure that there is a permanently installed disconnector.

Installation Considerations

The information in this design guide provides key features, product dimensions, cutouts and installation specifications. Before installing a Thermador Wall Chimney Hood, be sure to verify the cutout dimensions and electrical connections. Installation instructions are subject to change. Always consult with the installation manual included with the product for complete details prior to the installation.

Installation Options

Thermador Wall Chimney Hoods may be installed above a Thermador Range or Cooktop to create a convenient cooking center. Refer to the ventilation selection guide for compatibility.

Hood installation height above a range or cooktop can vary. To obtain the necessary installation height above a Thermador Range or Cooktop, consult the appliance's installation manual. An accessory Hood Extension can be used to fill the space between the hood and ceiling.

Thermador Wall Hoods can be mounted on a wall or suspended from a cabinet. The cabinet must be structurally joined to the wall studs to support the weight of this hood.

Electric Load (120V, 60Hz)

		Remote Blower	*Inline Blower*	*Integrated Blower*
		VTR2FZ	*VTI2FZ*	*VTN2FZ*
HPCN48WS	Amps	11.1	11.1	9.5
	Watts	1,332	1,332	1,140
HPCN36WS	Amps	10.3	10.3	8.7
	Watts	1,236	1,236	1,044
HMCB36WS, HMCB30WS, HDDB36WS, HDDB30WS	—	—	—	Blower Included, 4.9

INSTALLATION

Wall Chimney Hoods

HPCN48WS

Wall Chimney Hood (48-Inch Width)

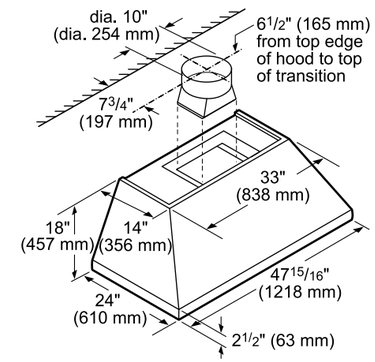

HPCN36WS

Wall Chimney Hood (36-Inch Width)

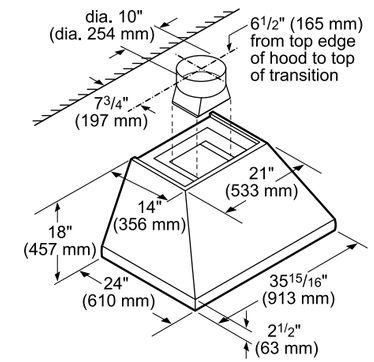

HMCB36WS

Wall Chimney Hood With Blower (36-Inch Width)

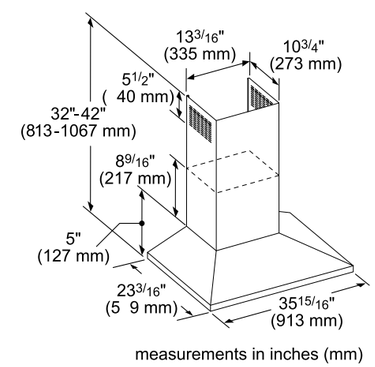

HMCB30WS

Wall Chimney Hood With Blower (30-Inch Width)

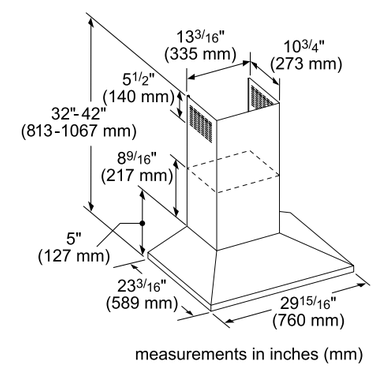

HDDB36WS

Wall Chimney Drawer Hood (36-Inch Width)

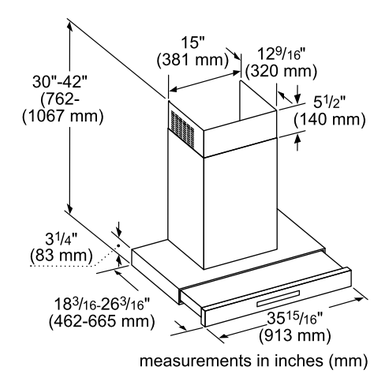

HDDB30WS

Wall Chimney Drawer Hood (30-Inch Width)

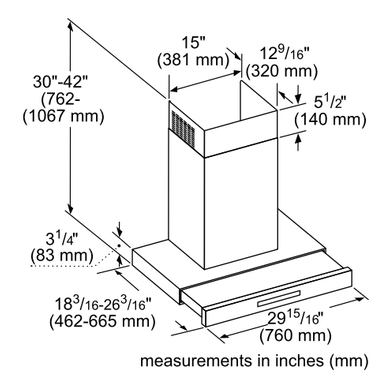

PLANNING INFORMATION

Island Hoods

Model Options

Thermador Island Hoods are available in 40-inch, 42-inch and 48-inch widths and feature a stainless steel design and the 40-inch has an elegant glass canopy. All of our island hoods are adjustable to suit ceiling heights of up to 9'.

Electrical Specifications

Be sure your Thermador Island Hood is properly installed and grounded by a qualified technician. Installation, electrical connections and grounding must comply with all applicable local codes.

Installation Considerations

The information in this design guide provides key features, product dimensions and installation specifications. Before installing a Thermador Island Hood, be sure to verify the dimensions and electrical connections. Installation instructions are subject to change. Always consult with the installation manual included with the product for complete details prior to the installation.

Installation Options

Thermador Island Hoods may be installed above a Thermador Range or Cooktop to create a convenient cooking center. Refer to the ventilation selection guide for compatibility.

Hood installation height above a range or cooktop can vary. To obtain the necessary installation height above a Thermador Range or Cooktop, consult the appliance's installation manual.

Thermador Island Hoods are suspended from the ceiling. The minimum ceiling height required is 97 $^{3}/_{16}$".

Electric Load (120V, 60Hz)

		Remote Blower	*Inline Blower*	*Integrated Blower*
		VTR2FZ	*VTI2FZ*	—
HPIN54WS, HPIN42WS	Amps	11.1	11.1	—
	Watts	1,332	1,332	—
HMIB42WS, HMIB36WS	Amps	—	—	Blower Included, 5.2

INSTALLATION

Island Hoods

HPIN54WS

Box Island Hood (54-Inch Width)

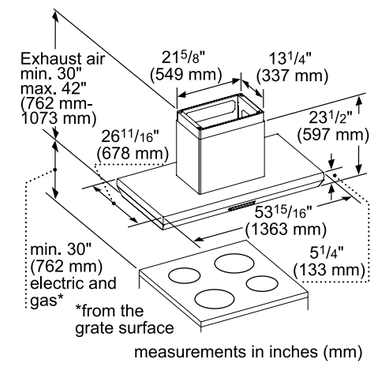

HPIN42WS

Box Island Hood (42-Inch Width)

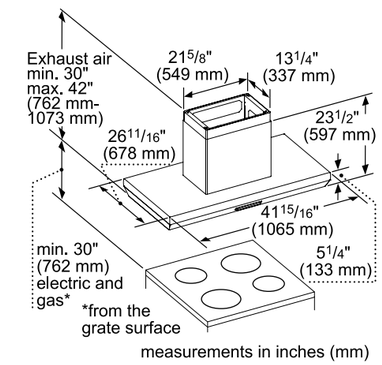

HMIB42WS

Low Profile Island Hood With Blower (42-Inch Width)

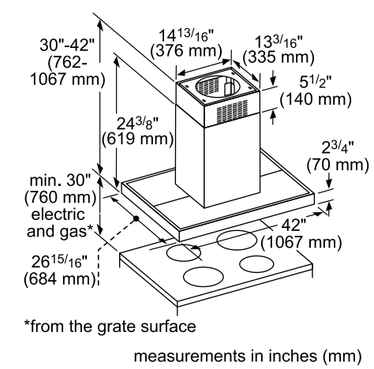

HMIB36WS

Low Profile Island Hood With Blower (36-Inch Width)

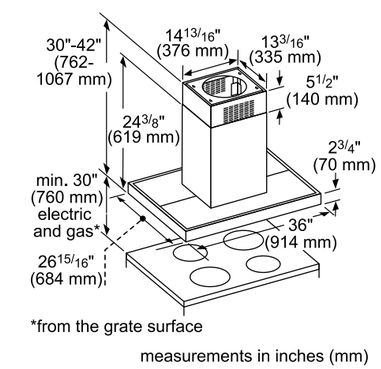

PLANNING INFORMATION

Downdraft

Model Options

Thermador Downdraft Hoods are available in 30 and 37-inch widths to fit your kitchen plans and are meticulously crafted for both function and design. Be sure to reference the correct model information in this design guide.

Electrical Specifications

Be sure your Thermador Downdraft Hood is properly installed and grounded by a qualified technician. Installation, electrical connections and grounding must comply with all applicable local codes.

Installation Considerations

The information in this design guide provides key features, product dimensions, cutouts and installation specifications. Before installing a Thermador Downdraft Hood, be sure to verify the cutout dimensions and electrical connections. Installation instructions are subject to change. Always consult with the installation manual included with the product for complete details prior to the installation.

Installation Options

The Thermador Downdraft Hood System is available in 30-inch or 37-inch widths. It is intended for installation with Thermador non-professional gas, electric or induction cooktops only.

Thermador Downdraft Hoods may be installed in a wall or island behind a Thermador non-professional gas, electric or induction cooktop to create a convenient cooking center. Refer to the ventilation selection guide for compatibility.

Electric Load (120V, 60Hz)

		Remote Blower		*Inline Blower*		*Flexible Blower*
		VTR1FZ	*VTR2FZ*	*VTI1FZ*	*VTI2FZ*	*VTD600P*
UCVM36XS	Amps	3.25	5.35	2.95	5.49	4.5
	Watts	390	642	354	659	540
UCVM30XS	Amps	3.1	5.25	2.86	5.39	4.5
	Watts	372	630	343	647	540
UCVP36XS	Amps	3.4	5.5	3.1	5.64	4.5
	Watts	408	660	372	677	540

Visit Thermador.com for complete specifications or text a Thermador model number to 21432 to have specs sent to your phone

INSTALLATION

Downdraft

Flexible Blower Installation – Front Exhaust Example

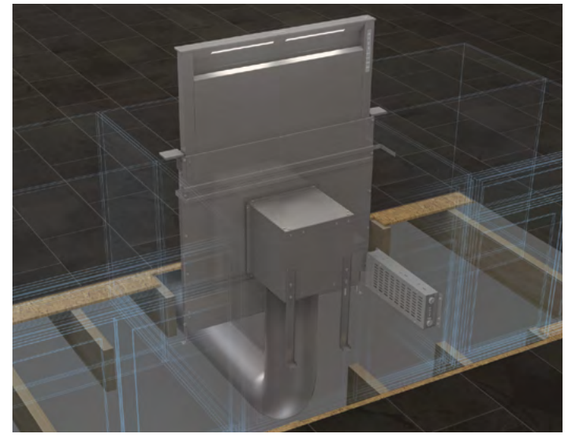

Required Blower

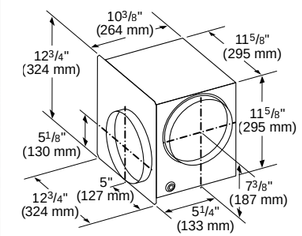

VTD600P – 600 CFM
600 CFM flexible blower can be installed as an integrated or inline blower

measurements in inches (mm)

Application

- Front downward application with space under floor line for duct work*
- Integral blower with front downward application can be used with optional recirculation kit*
- Integral blower can rotate for left or right exhaust
- Elbow and duct work are not included

Optional Accessories

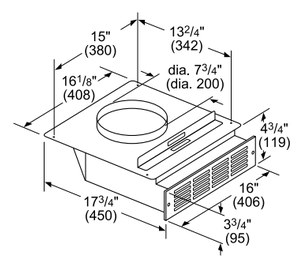

Measurements in inches and (mm)

Recirculation Kit
UCVRECIRC
Includes 1 charcoal filter and 1 metal grill vent plate (blower sold separately). Use with induction / electric cooktops only

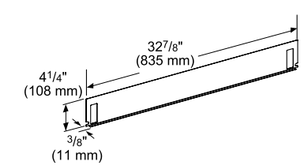

measurements in inches (mm)

Downdraft Gas Cooktop Seal Trim Kit
UCV36ST
Includes trim, seal, metal grill, and fasteners. Required for installations with 36" gas cooktops.

Replacement Charcoal Filter
UCVFILTER
Includes 1 replacement charcoal filter for UCVRECIRC recirculation kit

EXTNCE5
This cable extends 5 ft. to move the electrical panel out of the way to offer full installation flexibility in any ducting scenario while installing the downdraft. Ability to connect two cables together to make a 10 ft. cable.

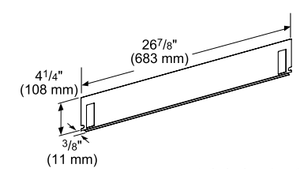

measurements in inches (mm)

Downdraft Gas Cooktop Seal Trim Kit
UCV30ST
Includes trim, seal, metal grill, and fasteners. Required for installations with 30" gas cooktops.

*For only front downward ducting applications, electrical panel must be remotely mounted. Optional 5' extension cable EXTNCE5 accessory is available to connect remotely placed electrical panel to downdraft. Refer to installation manual.

INSTALLATION

Downdraft

Flexible Blower Installation – Front Exhaust With Flexible Blower Below Floor Line Example

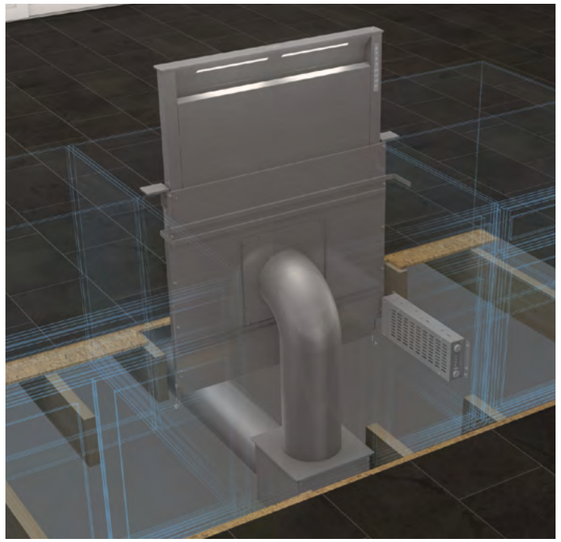

Application

- Front downward application with space under floor line for duct work*
- Elbow and duct work are not included

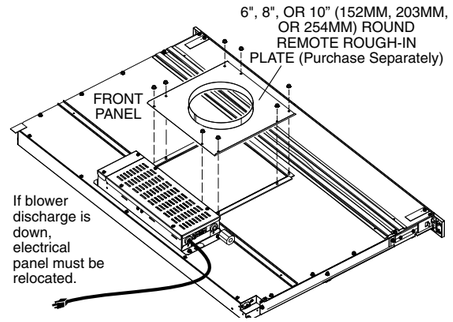

Required Blower

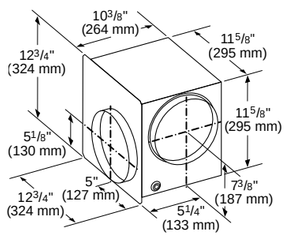

measurements in inches (mm)

VTD600P – 600 CFM
600 CFM flexible blower can be installed as an integrated or inline blower

Optional Accessories

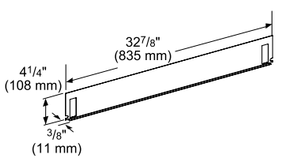

measurements in inches (mm)

Downdraft Gas Cooktop Seal Trim Kit

UCV36ST
Includes trim, seal, metal grill, and fasteners. Required for installations with 36" gas cooktops.

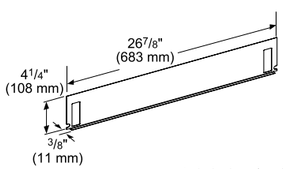

measurements in inches (mm)

Downdraft Gas Cooktop Seal Trim Kit

UCV30ST
Includes trim, seal, metal grill, and fasteners. Required for installations with 30" gas cooktops.

EXTNCE5
This cable extends 5 ft. to move the electrical panel out of the way to offer full installation flexibility in any ducting scenario while installing the downdraft. Ability to connect two cables together to make a 10 ft. cable.

Required Accessories

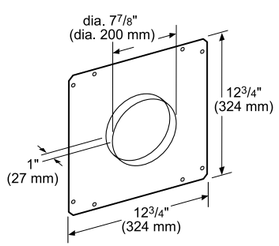

measurements in inches (mm)

CVTFRONT8
8" round front plate allows for front downward venting. Use with VTD600P blower as an inline installation, and ducting with 8" round duct connections.

*For front downward ducting applications, electrical panel must be remotely mounted. Optional 5' extension cable EXTNCE5 accessory is available to connect remotely placed electrical panel to downdraft. Refer to installation manual.

Visit Thermador.com for complete specifications or text a Thermador model number to 21432 to have specs sent to your phone

INSTALLATION

Downdraft

Flexible Blower Installation – Rear, Downward, Left or Right Side Exhaust Example

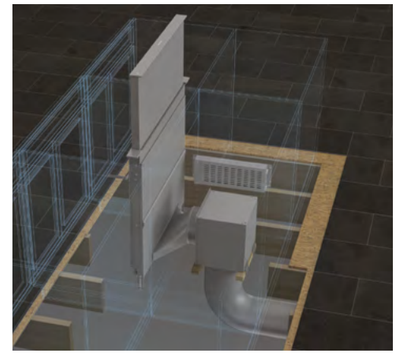

Rear Exhaust

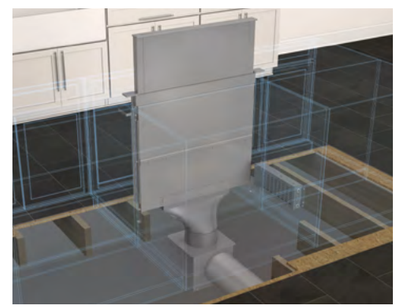

Downward Exhaust

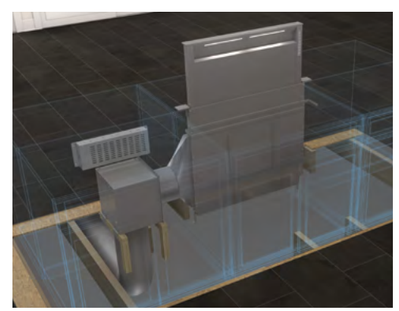

Left Side Exhaust

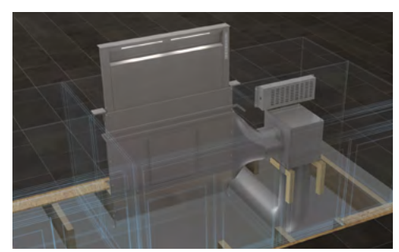

Right Side Exhaust

Application

- Rear, downward, left or right side exhaust options to preserve precious kitchen storage space or if ducting is more convenient for these configurations*
- Requires at least 18" of clearance to fit the blower and transition
- Blower must be accessible for maintenance
- Elbow and duct work are not included

Required Blower

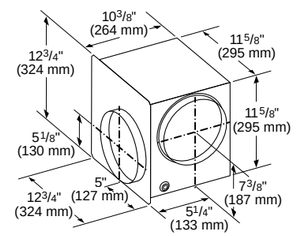

measurements in inches (mm)

VTD600P – 600 CFM
600 CFM flexible blower can be installed as an integrated or inline blower

Required Accessory

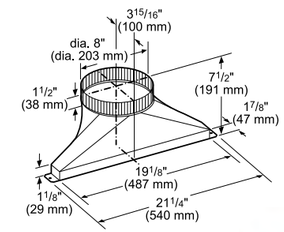

measurements in inches (mm)

CVTSIDE8
8" round transition allows for left, right, rear or downward venting. Use with VTD600P blower as an inline installation, and ducting with 8" round duct connections.

Optional Accessories

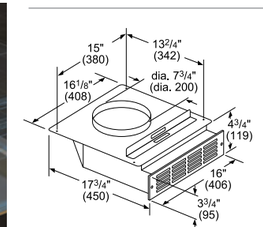

Measurements in inches and (mm)

Recirculation Kit

UCVRECIRC
Includes 1 charcoal filter and 1 metal grill vent plate (blower sold separately). Use with induction / electric cooktops only

Replacement Charcoal Filter
UCVFILTER
Includes 1 replacement charcoal filter for UCVRECIRC recirculation kit

Downdraft Gas Cooktop Seal Trim Kit
UCV36ST
Includes trim, seal, metal grill, and fasteners. Required for installations with 36" gas cooktops.

Downdraft Gas Cooktop Seal Trim Kit
UCV30ST
Includes trim, seal, metal grill, and fasteners. Required for installations with 30" gas cooktops.

EXTNCE5
This cable extends 5 ft. to move the electrical panel out of the way to offer full installation flexibility in any ducting scenario while installing the downdraft. Ability to connect two cables together to make a 10 ft. cable.

*For only front downward ducting applications, electrical panel must be remotely mounted. Electrical panel can still be remotely mounted in other exhaust configurations if desired. Optional 5' extension cable EXTNCE5 accessory is available to connect remotely placed electrical panel to downdraft. Refer to installation manual.

NOTE: Some applications may require deeper cabinets. Side and rear exhaust require at least 18" of clearance to fit the blower and / or duct work. Refer to installation manual.

INSTALLATION

Downdraft

Flexible Blower Installation – Side Exhaust with Slim 2' Rectangular Duct Example

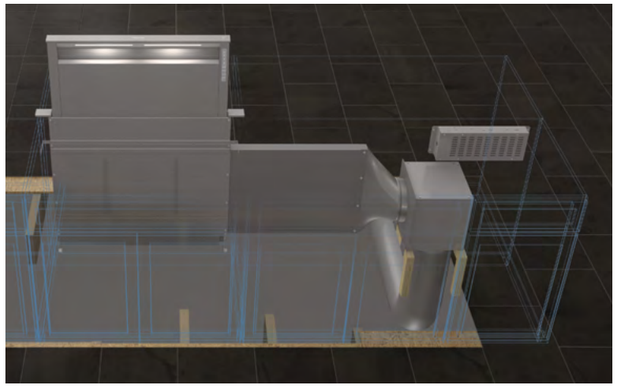

Application

- Side exhaust option to preserve precious kitchen storage space or if ducting is more convenient for this configuration*
- A slim 2' rectangular duct is available to place flexible blower in areas such as unused corner in island or peninsula applications
- Blower must be accessible for maintenance
- Elbow and duct work are not included

Required Blower

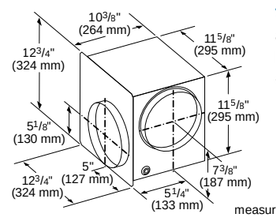

measurements in inches (mm)

VTD600P – 600 CFM

600 CFM flexible blower can be installed as an integrated or inline blower

Required Accessories

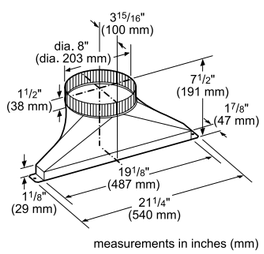

measurements in inches (mm)

CVTSIDE8

8" round transition to connect CVDUCT2 to VTD600P. Use with VTD600P blower as an inline installation, and ducting with 8" round duct connections.

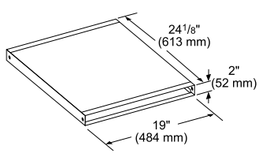

measurements in inches (mm)

CVDUCT2

Rectangular 2 ft. long x 1 7/8 in deep x 19 in wide duct. CVDUCT2 transition required to directly connect CVDUCT2 to sides or rear of downdraft housing. Can be used as an extension to exhaust through a cabinet or wall, and can be cut to modify length. For use with installation of inline or remote blower applications with CVTSIDE6, CVTSIDE8, and CVTSIDE10.

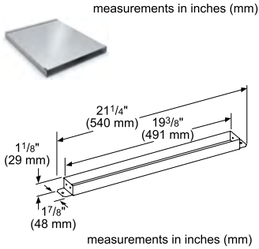

measurements in inches (mm)

CVTRECT2

Transition required to connect CVDUCT2 rectangular duct to downdraft housing at left, right, or rear

Optional Accessories

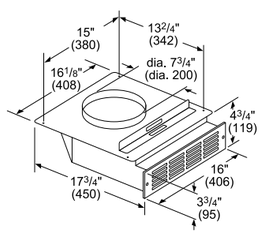

Measurements in inches and (mm)

Recirculation Kit

UCVRECIRC

Includes 1 charcoal filter and 1 metal grill vent plate (blower sold separately). Use with induction / electric cooktops only

Replacement Charcoal Filter

UCVFILTER

Includes 1 replacement charcoal filter for UCVRECIRC recirculation kit

Downdraft Gas Cooktop Seal Trim Kit

UCV36ST

Includes trim, seal, metal grill, and fasteners. Required for installations with 36" gas cooktops.

Downdraft Gas Cooktop Seal Trim Kit

UCV30ST

Includes trim, seal, metal grill, and fasteners. Required for installations with 30" gas cooktops.

EXTNCE5

This cable extends 5 ft. to move the electrical panel out of the way to offer full installation flexibility in any ducting scenario while installing the downdraft. Ability to connect two cables together to make a 10 ft. cable.

*For only front downward ducting applications, electrical panel must be remotely mounted. Electrical panel can still be remotely mounted in other exhaust configurations if desired. Optional 5' extension cable EXTNCE5 accessory is available to connect remotely placed electrical panel to downdraft. Refer to installation manual.

NOTE: Some applications may require deeper cabinets. Refer to installation manual.

INSTALLATION

Downdraft

Flexible Blower Installation – Recirculation Example

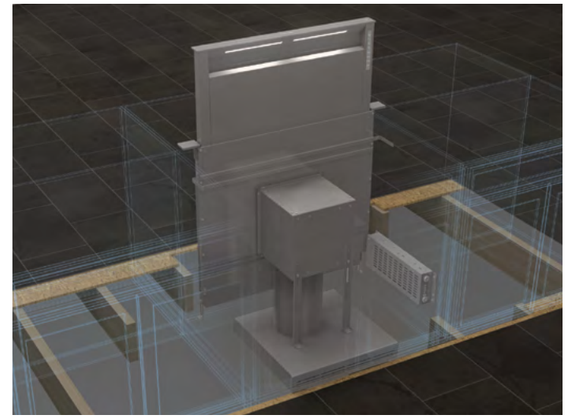

Application

- Allows for non-ducted downdraft installation by eliminating the need to exhaust to the exterior of the home*
- Recirculation module and metal grill vent plate placement can be rotated for flexible exhaust placement
- Elbow and duct work are not included
- Use with induction / electric cooktops only

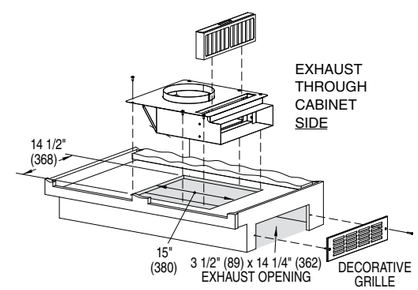

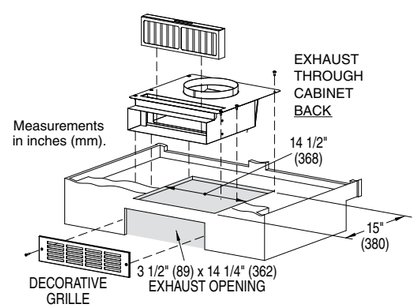

Required Blower

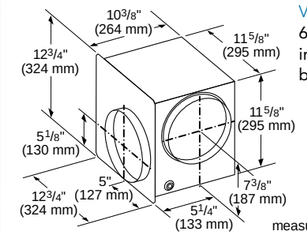

measurements in inches (mm)

VTD600P – 600 CFM

600 CFM flexible blower can be installed as an integrated or inline blower

Required Accessories

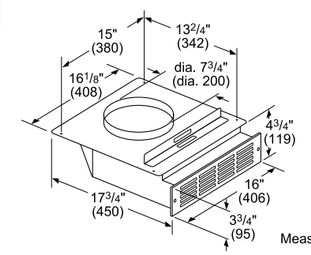

Measurements in inches and (mm)

Recirculation Kit

UCVRECIRC

Includes 1 charcoal filter and 1 metal grill vent plate (blower sold separately). Use with induction / electric cooktops only

Optional Accessories

Replacement Charcoal Filter

UCVFILTER

Includes 1 replacement charcoal filter for UCVRECIRC recirculation kit

Downdraft Gas Cooktop Seal Trim Kit

UCV36ST

Includes trim, seal, metal grill, and fasteners. Required for installations with 36" gas cooktops.

Downdraft Gas Cooktop Seal Trim Kit

UCV30ST

Includes trim, seal, metal grill, and fasteners. Required for installations with 30" gas cooktops.

EXTNCE5

This cable extends 5 ft. to move the electrical panel out of the way to offer full installation flexibility in any ducting scenario while installing the downdraft. Ability to connect two cables together to make a 10 ft. cable.

*For front downward ducting applications, electrical panel must be remotely mounted. Optional 5' extension cable EXTNCE5 accessory is available to connect remotely placed electrical panel to downdraft. Refer to installation manual.

Visit Thermador.com for complete specifications or text a Thermador model number to 21432 to have specs sent to your phone

UCVP36XS

37-Inch Deluxe Downdraft Ventilation Hood Dimensions

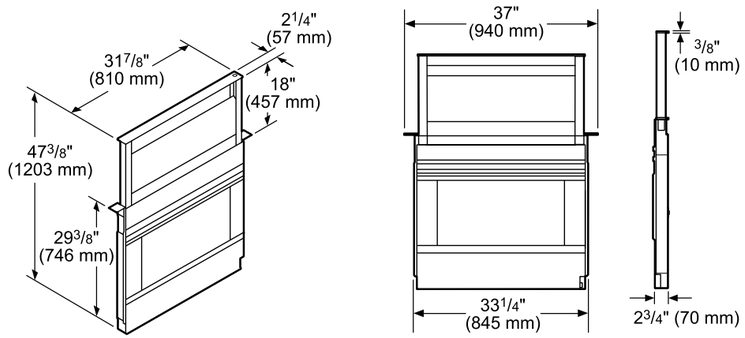

measurements in inches (mm)

UCVM36XS

37-Inch Downdraft Ventilation Hood Dimensions

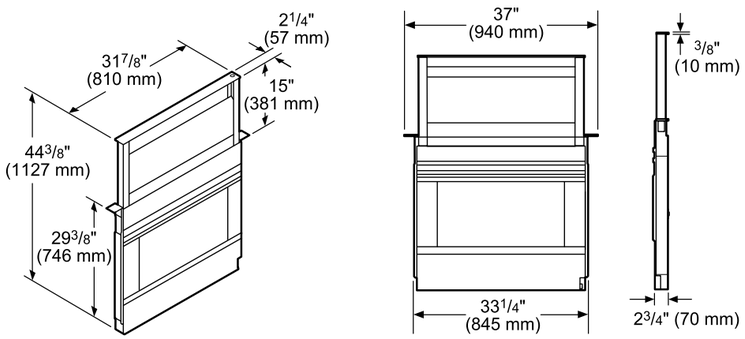

measurements in inches (mm)

UCVM30XS

30-Inch Downdraft Ventilation Hood Dimensions

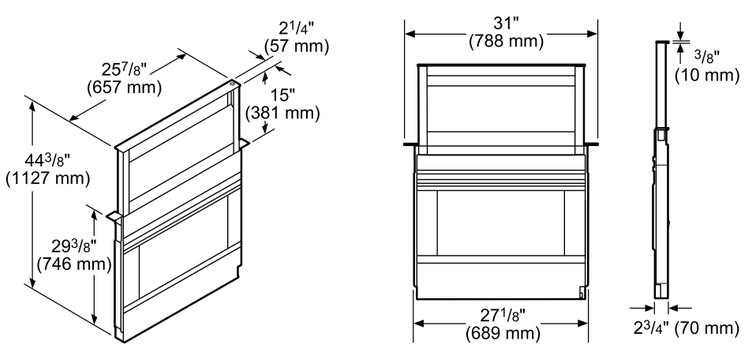

measurements in inches (mm)

37-Inch and 30-Inch Downdraft Ventilation Hood Cutout and Clearance Dimensions

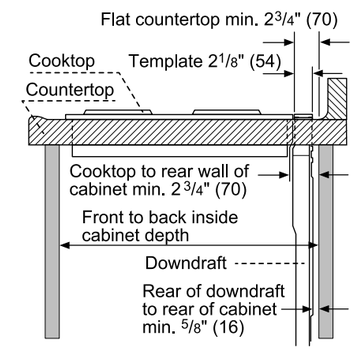

measurements in inches and (mm)

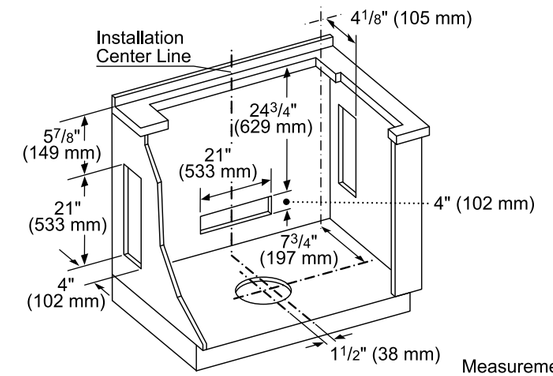

Measurements in inches (mm)

Electric or Induction Cooktop Cutout and Clearance Dimensions

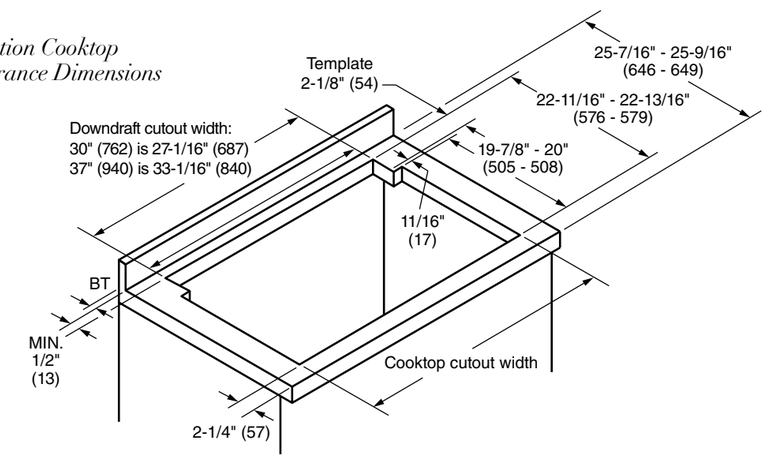

Gas Cooktop Cutout and Clearance Dimensions

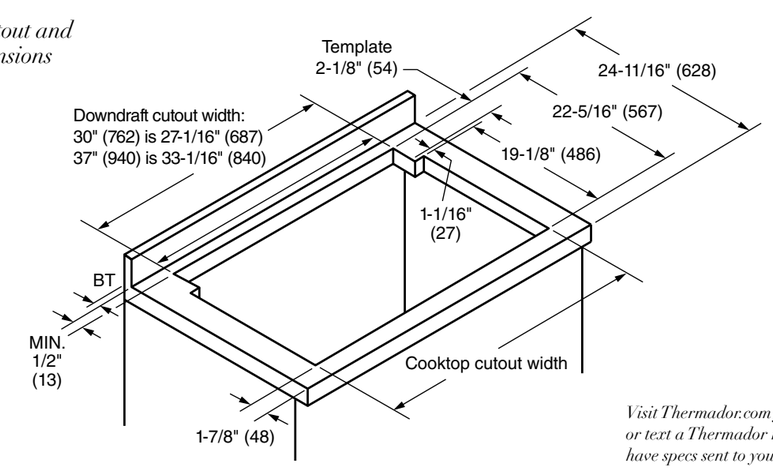

Visit Thermador.com for complete specifications or text a Thermador model number to 21432 to have specs sent to your phone

PLANNING INFORMATION

Custom Inserts

Model Options

Professional Thermador Custom Hood Inserts are available in 30-inch, 36-inch, 42-inch, 48-inch, 54-inch and 60-inch widths.

Electrical Specifications

Be sure your Thermador Custom Insert is properly installed and grounded by a qualified technician. Installation, electrical connections and grounding must comply with all applicable local codes.

Installation Considerations

The information in this design guide provides key features, product dimensions and installation specifications. Before installing a Thermador Custom Hood Insert, be sure to verify the dimensions and electrical connections. Installation instructions are subject to change. Always consult with the installation manual included with the product for complete details prior to the installation.

Installation Options

Thermador Custom Hood Inserts may be installed above a Thermador Range or Cooktop to create a convenient cooking center. Refer to the ventilation selection guide for compatibility.

Hood installation height above a range or cooktop can vary. To obtain the necessary installation height above a Thermador Range or Cooktop, consult the appliance's installation manual.

Thermador Custom Hood Inserts within custom hood applications create a seamless design with wall or island applications.

Electric Load (120V, 60Hz)

		Remote Blower	*Inline Blower*	*Integrated Blower*
		VTR2FZ	*VTI2FZ*	*VTN2FZ*
VCIN60GWS, VCIN54GWS, VCIN48GWS	Amps	11.1	11.1	9.5
	Watts	1,332	1,332	1,140
VCIN42GWS	Amps	10.3	10.3	8.7
	Watts	1,236	1,236	1,140
VCIN36GWS	Amps	10.3	10.3	8.7
	Watts	1,236	1,236	1,044
VCI3B36ZS, VCI3B30ZS	Amps	—	—	Blower Included, 2.4
VCI6B36ZS, VCI6B30ZS	Amps	—	—	Blower Included, 3.3

Visit Thermador.com for complete specifications or text a Thermador model number to 21432 to have specs sent to your phone

INSTALLATION

Custom Inserts

Custom Insert Hood Dimensions

NOTE: VCIN Custom Insert models include hood trim pieces.

VCIN60GWS

60-Inch

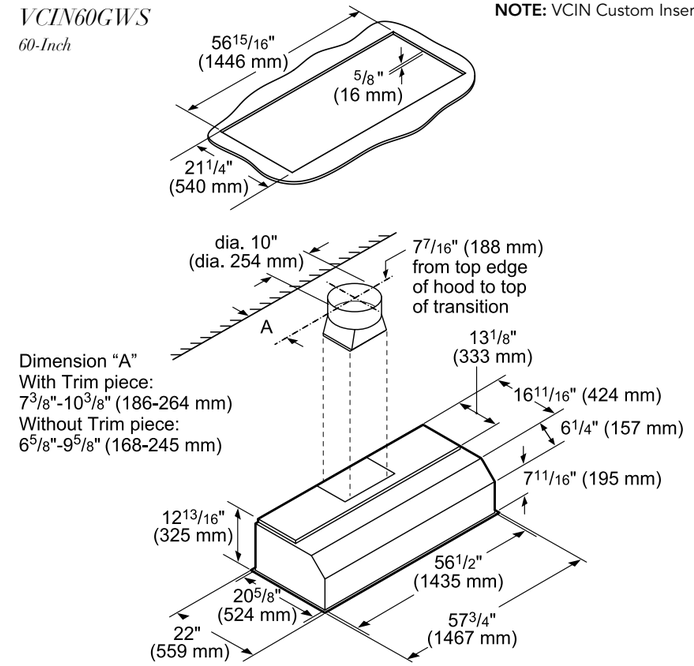

VCIN54GWS

54-Inch

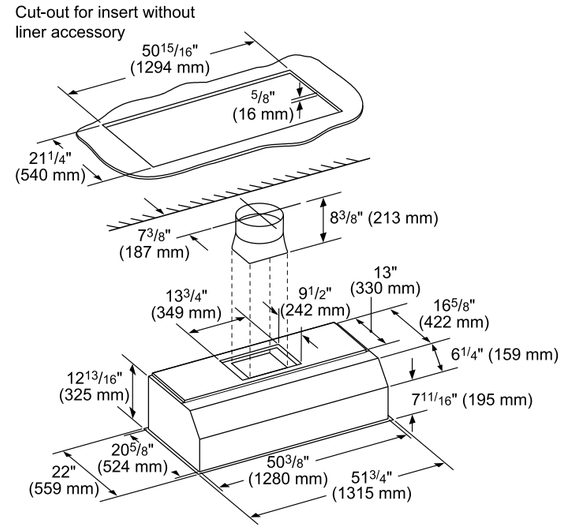

VCIN48GWS

48-Inch

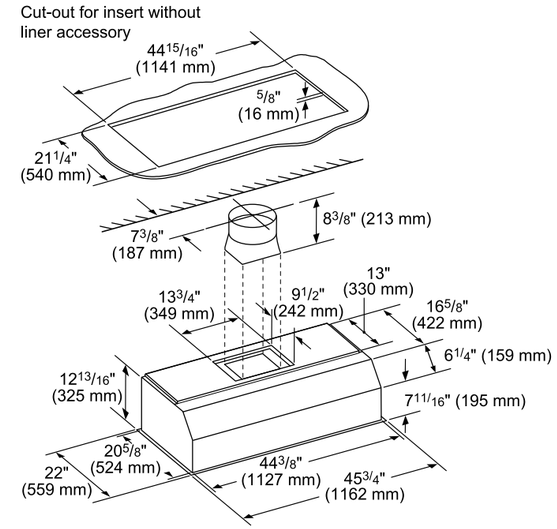

measurements in inches (mm)

measurements in inches (mm)

Custom Insert Hood Dimensions

NOTE: VCIN Custom Insert models include hood trim pieces.

VCIN42GWS

42-Inch

Cut-out for insert without liner accessory

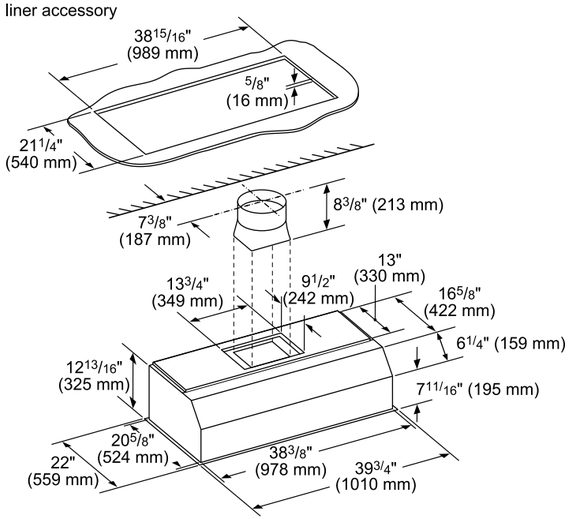

measurements in inches (mm)

VCIN36GWS

36-Inch

Cut-out for insert without liner accessory

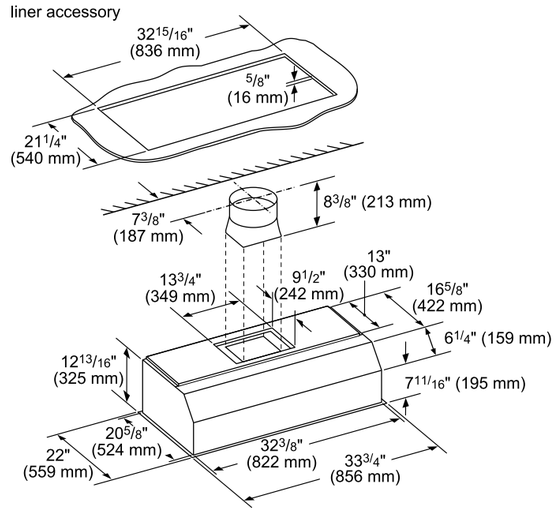

measurements in inches (mm)

Custom Insert Hood Dimensions

VCI3B36ZS, VCI6B36ZS

36-Inch

Measurements in inches (mm)

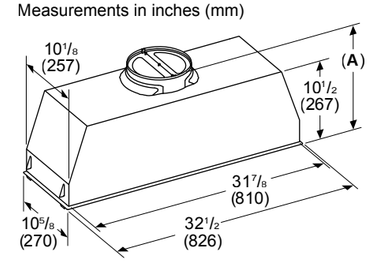

A: Total height
- With 6″ duct transition = 12 3/4″ (324 mm)
- With 8″ duct transition = 12 5/8″ (321 mm)

Measurements in inches (mm)

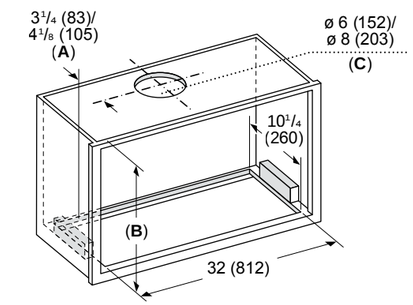

A: Location of duct opening (from back inside edge of cabinet)

B: Min. height for vertical discharge = 15″ (381 mm), min.
Height for horizontal discharge or recirculation =
VCI3B36ZS–23″ (584 mm)
VCI6B36ZS–27″ (686 mm)

C: Pending model/blower size

VCI3B30ZS, VCI6B30ZS

30-Inch

Measurements in inches (mm)

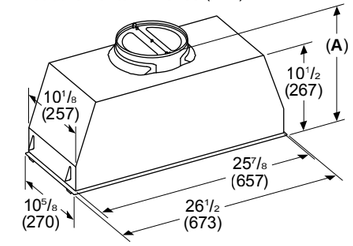

A: Total height
- With 6″ duct transition = 12 3/4″ (324 mm)
- With 8″ duct transition = 12 5/8″ (321 mm)

Measurements in inches (mm)

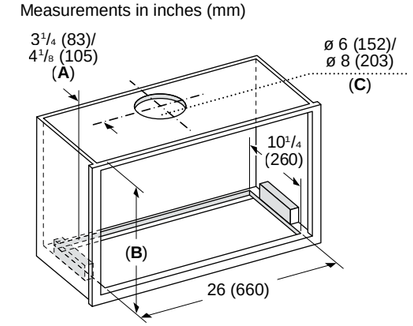

A: Location of duct opening (from back inside edge of cabinet)

B: Min. height for vertical discharge = 15″ (381 mm), min.
Height for horizontal discharge or recirculation =
VCI3B30ZS–23″ (584 mm)
VCI6B30ZS–27" (686 mm)

C: Pending model/blower size

Thermador Exclusive

Our energy-efficient Cool Air Flow Technology—upgraded with a quieter fan—evenly distributes cold air throughout all parts of the unit.

Freedom® Collection
REFRIGERATION

FOR MASTERPIECE® AND PROFESSIONAL COLLECTIONS

The Freedom Refrigeration Collection now features all-new stainless steel interiors—for enhanced performance inside and out. Choose from a suite of personalization options, including custom stainless steel columns, expanded storage, and more.

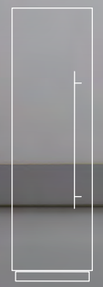

FREEZER COLUMN

Freedom Refrigeration
24-INCH – T24ID905LP

FRESH FOOD COLUMN

Freedom Refrigeration
36-INCH – T36IR905SP

WINE PRESERVATION

Freedom Refrigeration
24-INCH – T24IW905SP

PRESERVATION PERSONIFIED

Endless Configurations

The Thermador Freedom® Refrigeration Collection is an elite suite of integrated cooling products offering ultimate design freedom for any space of the home.

The Ultimate Culinary Artist

Demanding The Finest In The Fine Details

- Refrigeration Column
- Freezer Column
- Wine Column
- Under-Counter 2 Drawer Refrigeration

The Cloffice

Empowering Your Passions

- Under-Counter Wine
- Under-Counter 2 Drawer Refrigeration

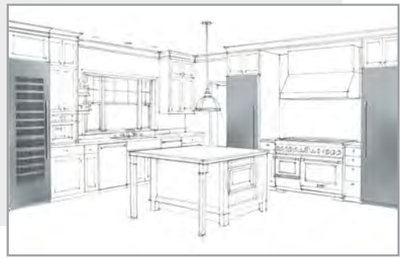

The Everyday Adventurer

Seeking The Unexpected Every Day

- Refrigeration Column
- Wine Column
- Freezer Column

The Visionary

Getting The Most From More Home Time

- Bottom Mount Refrigeration
- Freezer Column
- Wine Column
- Under-Counter Refrigeration

The Yoga Den

Relaxation Is Always Top Of Mind

- Two Under-Counter 2 Drawer Refrigeration

Visit **THERMADOR.COM/REFRIGERATION** for more configuration inspiration.

Customize Your Exterior:

Our award winning Freedom® Collection offers customized exteriors in three simple steps.

1. Choose your unit: Refrigerator, Freezer, Bottom Freezer, Wine Column or Under-Counter.

2. Choose your panel: stainless steel for a standout look, or custom panel for seamless integration with the rest of your cabinetry.

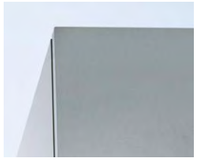

Stainless Steel Panel

Custom Panel

3. Choose your handle design: Masterpiece®, Professional, or custom handles. See page 190 for details.

Masterpiece®

Professional

Visit **THERMADOR.COM** for details on building your custom refrigeration.

PRESERVATION PERSONIFIED

Exceptional From The Inside Out

Choose from a variety of interior configuration options to store everything from delicate produce to jarred preserves.

Produce Bins and Railing sold separately as an accessory. See page 187 for details.

36-Inch French Door

- 2 Half Gallon Bins
- 2 Small Produce Bins
- 2 Gallon Bins

Small Produce Bin – SPRODBIN10

Produce Bin Railing – 3DPRODRAIL

- 4 Small Produce Bins
- 2 Half Gallon Bins

Small Produce Bin – SPRODBIN10

Produce Bin Railing – 3DPRODRAIL

- 6 Half Gallon Bins

Half Gallon Bin – 3DHFGALBIN

36-Inch Single Column & Bottom Freezer

- 1 Half Gallon Bin
- 2 Large Produce Bins
- 1 Small Produce Bin
- 1 Gallon Bin

Large Produce Bin – LPRODBIN10

Small Produce Bin – SPRODBIN10

Produce Bin Railing – 36PRODRAIL

- 4 Large Produce Bins
- 2 Small Produce Bins
- 1 Half Gallon Bin

Large Produce Bin – LPRODBIN10

Small Produce Bin – SPRODBIN10

Produce Bin Railing – 36PRODRAIL

- 3 Half Gallon Bins

Half Gallon Bin – 36HFGALBIN

30-Inch Bottom Freezer

- 1 Half Gallon Bin
- 2 Large Produce Bins
- 1 Gallon Bin

Large Produce Bin – LPRODBIN10

Produce Bin Railing – 30PRODRAIL

- 4 Large Produce Bins
- 1 Half Gallon Bin

Large Produce Bin – LPRODBIN10

Produce Bin Railing – 30PRODRAIL

- 3 Half Gallon Bins

Half Gallon Bin – 30HFGALBIN

23.5-Inch & 24-Inch Single Column (Shown), & 30-Inch Single Column

- 2 Half Gallon Bins
- 2 Small Produce Bins
- 1 Gallon Bin

Small Produce Bin – SPRODBIN10

Produce Bin Railing – 24PRODRAIL

- 2 Half Gallon Bins
- 2 Large Produce Bins
- 1 Gallon Bin

Large Produce Bin – LPRODBIN10

Produce Bin Railing – 30PRODRAIL

- 6 Small Produce Bins
- 1 Half Gallon Bin

Small Produce Bin – SPRODBIN10

Produce Bin Railing – 24PRODRAIL

- 6 Large Produce Bins
- 1 Half Gallon Bin

Large Produce Bin – LPRODBIN10

Produce Bin Railing – 30PRODRAIL

- 4 Half Gallon Bins

Half Gallon Bin – 24HFGALBIN

- 4 Half Gallon Bins

Half Gallon Bin – 30HFGALBIN

Visit **THERMADOR.COM/REFRIGERATION** for complete specifications.

FRESH FOOD COLUMNS

Freedom® Refrigeration Home Connect

23.5-Inch Fresh Food Replacement Refrigeration

- Specially crafted to pair with any 18" and 24" column to fit predetermined 42" and 48" spaces
- Reversible Door Swing
- Build Your Custom Column by Choosing a Panel and Handle

23.5-Inch – T23IR905SP

24-Inch Fresh Food

- Reversible Door Swing
- Build Your Custom Column by Choosing a Panel and Handle

24-Inch – T24IR905SP

30-Inch Fresh Food

- Reversible Door Swing
- Build Your Custom Column by Choosing a Panel and Handle

30-Inch – T30IR905SP

36-Inch Fresh Food

- Reversible Door Swing
- Build Your Custom Column by Choosing a Panel and Handle

36-Inch – T36IR905SP

*All models except T24IR905SP

FREEZER COLUMNS EXTERNAL DISPENSER

Freedom® Refrigeration Home Connect

18-Inch Freezer External Ice & Water Dispenser

- Build Your Custom Column by Choosing a Panel and Handle

18-Inch with Left-Hand Door Swing – T18ID905LP

18-Inch with Right-Hand Door Swing – T18ID905RP

24-Inch Freezer External Ice & Water Dispenser

- Build Your Custom Column by Choosing a Panel and Handle

24-Inch with Left-Hand Door Swing – T24ID905LP

24-Inch with Right-Hand Door Swing – T24ID905RP

FREEZER COLUMNS INTERNAL ICE MAKER

Freedom® Refrigeration Home Connect

18-Inch Freezer Internal Diamond Ice Maker

- Reversible Door Swing
- Build Your Custom Column by Choosing a Panel and Handle

18-Inch – T18IF905SP

24-Inch Freezer Internal Diamond Ice Maker

- Reversible Door Swing
- Build Your Custom Column by Choosing a Panel and Handle

24-Inch – T24IF905SP

30-Inch Freezer Internal Diamond Ice Maker

- Reversible Door Swing
- Build Your Custom Column by Choosing a Panel and Handle

30-Inch – T30IF905SP

36-Inch Freezer Internal Diamond Ice Maker

- Reversible Door Swing
- Build Your Custom Column by Choosing a Panel and Handle

36-Inch – T36IF905SP

WINE PRESERVATION COLUMNS

Freedom® Refrigeration Home Connect

18-Inch Wine Preservation

- Reversible Door Swing
- Build Your Custom Column by Choosing a Panel and Handle
- 2 Temperature Zones

18-Inch – T18IW905SP

24-Inch Wine Preservation

- Reversible Door Swing
- Build Your Custom Column by Choosing a Panel and Handle
- 3 Temperature Zones

24-Inch – T24IW905SP

See page 190 for accessories
Visit Thermador.com for complete specifications or text a Thermador model number to 21432 to have specs sent to your phone

See page 190 for accessories
Visit Thermador.com for complete specifications or text a Thermador model number to 21432 to have specs sent to your phone

BOTTOM FREEZERS

Freedom® Refrigeration

Home Connect

30-Inch Bottom Freezer 2 Door

- Reversible Door Swing
- Build Your Custom Column by Choosing a Panel and Handle

30-Inch – T30IB905SP

36-Inch Bottom Freezer 2 Door

- Reversible Door Swing
- Build Your Custom Column by Choosing a Panel and Handle

36-Inch – T36IB905SP

36-Inch Bottom Freezer French Door

- Build Your Custom Column by Choosing a Panel and Handle

36-Inch – T36IT905NP

36-Inch – T36IT903NP (White Interior)

PRE-ASSEMBLED BOTTOM FREEZERS

Freedom® Refrigeration, Professional

Home Connect

30-Inch Bottom Freezer Pre-Assembled 2 Door

- Reversible Door Swing
- Pre-assembled with Stainless Steel Panels and Professional Handles

30-Inch – T30BB925SS

36-Inch Bottom Freezer Pre-Assembled 2 Door

- Reversible Door Swing
- Pre-assembled with Stainless Steel Panels and Professional Handles

36-Inch – T36BB925SS

36-Inch Bottom Freezer Pre-Assembled French Door

- Pre-assembled with Stainless Steel Panels and Professional Handles

36-Inch – T36BT925NS

See page 190 for accessories
Visit Thermador.com for complete specifications or text a Thermador model number to 21432 to have specs sent to your phone

PRE-ASSEMBLED BOTTOM FREEZERS

Freedom® Refrigeration, Masterpiece®

Home Connect

30-Inch Bottom Freezer Pre-Assembled 2 Door

- Reversible Door Swing
- Pre-assembled with Stainless Steel Panels and Masterpiece® Handles

30-Inch – T30BB915SS

36-Inch Bottom Freezer Pre-Assembled 2 Door

- Reversible Door Swing
- Pre-assembled with Stainless Steel Panels and Masterpiece® Handles

36-Inch – T36BB915SS

36-Inch Bottom Freezer Pre-Assembled French Door

- Pre-assembled with Stainless Steel Panels and Masterpiece® Handles

36-Inch – T36BT915NS

FREESTANDING FRENCH DOOR BOTTOM FREEZER

Freestanding Refrigeration, Professional & Masterpiece®

Home Connect

Introducing the first-ever Thermador Freestanding Refrigerator. Get an instant preservation upgrade featuring Dual Evaporator and Dual Compressors for optimized freshness, hidden hinges and venting for a seamless exterior, plus best-in-class theater lighting. Achieve the appearance and performance of built-in refrigeration without the need to adjust existing cabinetry.

36-Inch Freestanding Bottom Freezer French Door Features

- Counter-depth 72" Tall Appliance
- Built-in Look Exterior Design
- Dual Evaporator / Dual Compressor
- Illuminated Back Wall
- Temperature and Humidity Freshness Drawers
- Stainless Steel ThermaFresh Mats
- Internal Water
- Diamond Ice
- Home Connect®
- Full Extension Metal Drawer Rails

36-Inch with Professional Handles – T36FT820NS

36-Inch with Masterpiece® Handles – T36FT810NS

See page 190 for accessories
Visit Thermador.com for complete specifications or text a Thermador model number to 21432 to have specs sent to your phone

REFRIGERATORS WITH GLASS DOOR

Under-Counter Freedom® Refrigeration

Features

- Customizable Cooling Modes (Fridge, Pantry and Bar)
- SoftClose® Door
- Fully Adjustable Tempered Glass Shelves
- Door Open Alarm
- LED Theater Lighting
- Touch Electronic Controls
- 24-Inches Wide

Professional Handle

Left-Hinged – T24UR925LS

Right-Hinged – T24UR925RS

Masterpiece® Handle

Left-Hinged – T24UR915LS

Right-Hinged – T24UR915RS

Custom Panel

Left-Hinged – T24UR905LP

Right-Hinged – T24UR905RP

WINE RESERVES WITH GLASS DOOR

Under-Counter Freedom® Refrigeration

Features

- Dual Zone Wine Storage
- Fully Independent Adjustable Temperature Zones
- UV Resistant Tempered Glass Door
- SoftClose® Door
- LED Theater Lighting
- Touch Electronic Controls
- 24-Inches Wide

Professional Handle

Left-Hinged – T24UW925LS

Right-Hinged – T24UW925RS

Masterpiece® Handle

Left-Hinged – T24UW915LS

Right-Hinged – T24UW915RS

Custom Panel

Left-Hinged – T24UW905LP

Right-Hinged – T24UW905RP

See page 190 for accessories

Visit Thermador.com for complete specifications or text a Thermador model number to 21432 to have specs sent to your phone

DOUBLE DRAWER REFRIGERATORS

Under-Counter Freedom® Refrigeration

Features

- Customizable Cooling Modes (Fridge, Pantry and Bar)
- SoftClose® Drawers
- Customizable Drawer Organization
- Quick Chill
- LED Lighting
- Drawer Mats
- Touch Electronic Controls
- 24-Inches Wide

Professional Handles

T24UR925DS

Masterpiece® Handles

T24UR915DS

Custom Panel

T24UR905DP

DOUBLE DRAWER REFRIGERATOR/ FREEZER

Under-Counter Freedom® Refrigeration

Features

- Customizable Cooling Modes in Refrigerator Drawer (Fridge, Pantry and Bar)
- Freezer Drawer with Filtered Automatic Ice Maker
- SoftClose® Drawers
- Customizable Drawer Organization
- LED Lighting
- Drawer Mats
- Touch Electronic Controls
- 24-Inches Wide

Professional Handles

T24UC925DS

Masterpiece® Handles

T24UC915DS

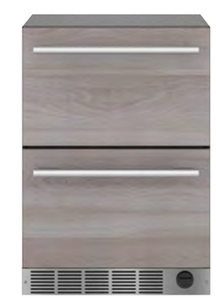

Custom Panel

T24UC905DP

See page 190 for accessories

Visit Thermador.com for complete specifications or text a Thermador model number to 21432 to have specs sent to your phone

FRESH FOOD COLUMNS QUICK REFERENCE CHART

Freedom® Refrigeration

	T23IR905SP 23.5-Inch	T24IR905SP 24-Inch	T30IR905SP 30-Inch	T36IR905SP 36-Inch
Key Features				
Home Connect® (Wi-Fi Enabled)	Yes	Yes	Yes	Yes
Full Stainless Steel Inner Liner	Yes	Yes	Yes	Yes
TFT Control Panel	Yes	Yes	Yes	Yes
ThermaFresh System	Yes	Yes	Yes	Yes
Open Door Assist	Yes	Yes	Yes	Yes
General Properties				
Panel Ready	Yes	Yes	Yes	Yes
Reversible Door Swing	Yes	Yes	Yes	Yes
SoftClose® Door	Yes	Yes	Yes	Yes
SoftClose® Drawers	Yes	Yes	Yes	Yes
Carbon Air Filter	Yes	Yes	Yes	Yes
Lighting	LED Sidewall and Theater Lighting			
Refrigerator Shelves	4 (3 Adj.)	4 (3 Adj.)	4 (3 Adj.)	4 (3 Adj.)
Shelf Material	Glass w/Aluminum Profile			
Full Extension Drawers @ 90° and 115° Door Opening Angle	Yes	Yes	Yes	Yes
General Use Drawer	1	1	1	1
Humidity Managed Drawer	1	1	1	1
Temperature Controlled Drawer	1	1	1	1
Door Bins	3 (1 Gallon)	3 (1 Gallon)	3 (1 Gallon)	3 (1 Gallon)
Door Open Alarm	Yes	Yes	Yes	Yes
Special Modes	Sabbath, Economy, Vacation			
Capacity				
Total Capacity (cu. ft.)	13.0 cu. ft.	13.0 cu. ft.	16.8 cu. ft.	20.6 cu. ft.
Performance				
Dedicated Evaporator & Compressor	Yes	Yes	Yes	Yes
Freeflow® Cold Air System	Yes	Yes	Yes	Yes
SuperCool	Yes	Yes	Yes	Yes
Efficiency				
ENERGY STAR® Certified	Yes	Yes	Yes	Yes
Annual Energy Consumption	270 kWh	254 kWh	279 kWh	312 kWh
Dimensions				
Appliance Dimensions (H x W x D) (in.)	83 3/4"* x 23 1/4" x 24"	83 3/4"* x 23 3/4" x 24"	83 3/4"* x 29 3/4" x 24"	83 3/4"* x 35 3/4" x 24"
Required Cutout Size (H x W x D) (in.)	84" x 23 1/2" x 25"	84" x 24" x 25"	84" x 30" x 25"	84" x 36" x 25"

*Height adjustable + / -1/2" (+ / -13 mm)

Visit Thermador.com for complete specifications or text a Thermador model number to 21432 to have specs sent to your phone

WINE PRESERVATION COLUMNS QUICK REFERENCE CHART

Freedom® Refrigeration

	T18IW905SP 18-Inch	T24IW905SP 24-Inch
Key Features		
Home Connect® (Wi-Fi Enabled)	Yes	Yes
Independent Temperature Zones	2	3
TFT Control Panel	Yes	Yes
Open Door Assist	Yes	Yes
General Properties		
Panel Ready	Yes	Yes
Reversible Door Swing	Yes	Yes
SoftClose® Door	Yes	Yes
Carbon Air Filter	Yes	Yes
Lighting	LED Sidewall and Theater Lighting	LED Sidewall and Theater Lighting
Number of Shelves	11 (an additional shelf can be added for maximum capacity; order T18WINERK1)	10 (an additional shelf can be added for maximum capacity; order T24WINERK1)
Number of Slide-out Shelves	10	8
Shelf Material	Wenge Wood / Aluminum Frame	Wenge Wood / Aluminum Frame
Full Extension Drawers @ 90° and 115° Door Opening Angle	Yes	Yes
Presenter Shelf with Light	Yes	Yes
Portable Aluminum Wine Presenter	Yes	Yes
Type of Glass Door	Tempered and UV-protective	Tempered and UV-protective
Door Open Alarm	Yes	Yes
Special Modes	Sabbath, Economy, Vacation	
Capacity		
Bottle Capacity (750 ml)	58	92
Bottle Capacity (750 ml) with Additional Accessory Shelf (Sold Separately)	62	99
Efficiency		
ENERGY STAR® Certified	No	No
Annual Energy Consumption	162 kWh	179 kWh
Dimensions		
Appliance Dimensions (H x W x D) (in.)	83 3/4"* x 17 3/4" x 24"	83 3/4"* x 23 3/4" x 24"
Required Cutout Size (H x W x D) (in.)	84" x 18" x 25"	84" x 24" x 25"

*Height adjustable + / -1/2" (+ / -13 mm)

Visit Thermador.com for complete specifications or text a Thermador model number to 21432 to have specs sent to your phone

FREEZER COLUMNS WITH EXTERNAL DISPENSER QUICK REFERENCE CHART

Freedom® Refrigeration

	T18ID905LP 18-Inch	T18ID905RP 18-Inch	T24ID905LP 24-Inch	T24ID905RP 24-Inch
Key Features				
Home Connect® (Wi-Fi Enabled)	Yes	Yes	Yes	Yes
Full Stainless Steel Inner Liner	Yes	Yes	Yes	Yes
Door Swing	Left-Hand	Right-Hand	Left-Hand	Right-Hand
In-Door Dispenser with Oversized Opening	Yes	Yes	Yes	Yes
TFT Control Panel	Yes	Yes	Yes	Yes
Open Door Assist	Yes	Yes	Yes	Yes
General Properties				
Panel Ready	Yes	Yes	Yes	Yes
Reversible Door Swing	No	No	No	No
SoftClose® Door	Yes	Yes	Yes	Yes
SoftClose® Drawers	Yes	Yes	Yes	Yes
Lighting	LED Sidewall and Theater Lighting			
Freezer Shelves	4 (2 Adj.)	4 (2 Adj.)	4 (2 Adj.)	4 (2 Adj.)
Shelf Material	Glass w/Aluminum Profile			
Full Extension Drawers @ 115° Door Opening Angle	Yes	Yes	Yes	Yes
General Use Drawer	2	2	2	2
Door Bins	0	0	0	0
External LED Proximity Sensor	Yes	Yes	Yes	Yes
Chilled Water, Crushed and Cubed Ice	Yes	Yes	Yes	Yes
Rapid Water Replenishment System	Yes	Yes	Yes	Yes
Ice Maker with Diamond Ice System	Yes	Yes	Yes	Yes
Door Open Alarm	Yes	Yes	Yes	Yes
Special Modes	Sabbath, Economy, Vacation			
Capacity				
Total Capacity (cu. ft.)	7.8 cu. ft.	7.8 cu. ft.	11.2 cu. ft.	11.2 cu. ft.
Performance				
Dedicated Evaporator & Compressor	Yes	Yes	Yes	Yes
SuperFreeze®	Yes	Yes	Yes	Yes
Defrost Process	Frost-Free	Frost-Free	Frost-Free	Frost-Free
Efficiency				
ENERGY STAR® Certified	Yes	Yes	Yes	Yes
Annual Energy Consumption	428 kWh	428 kWh	454 kWh	454 kWh
Dimensions				
Appliance Dimensions (H x W x D) (in.)	83 3/4"* x 17 3/4" x 24"	83 3/4"* x 17 3/4" x 24"	84"* x 23 3/4" x 24"	84"* x 23 3/4" x 24"
Required Cutout Size (H x W x D) (in.)	84" x 18" x 25"	84" x 18" x 25"	84" x 24" x 25"	84" x 24" x 25"

*Height adjustable + / -1/2" (+ / -13 mm)

Visit Thermador.com for complete specifications or text a Thermador model number to 21432 to have specs sent to your phone

FREEZER COLUMNS WITH INTERNAL ICE MAKER QUICK REFERENCE CHART

Freedom® Refrigeration

	T18IF905SP 18-Inch	T24IF905SP 24-Inch	T30IF905SP 30-Inch	T36IF905SP 36-Inch
Key Features				
Home Connect® (Wi-Fi Enabled)	Yes	Yes	Yes	Yes
Full Stainless Steel Inner Liner	Yes	Yes	Yes	Yes
Door Swing	N/A	N/A	N/A	N/A
In-Door Dispenser with Oversized Opening	No	No	No	No
TFT Control Panel	Yes	Yes	Yes	Yes
Open Door Assist	Yes	Yes	Yes	Yes
General Properties				
Panel Ready	Yes	Yes	Yes	Yes
Reversible Door Swing	Yes	Yes	Yes	Yes
SoftClose® Door	Yes	Yes	Yes	Yes
SoftClose® Drawers	Yes	Yes	Yes	Yes
Lighting	LED Sidewall and Theater Lighting			
Freezer Shelves	4 (3 Adj.)	4 (3 Adj.)	4 (3 Adj.)	4 (3 Adj.)
Shelf Material	Glass w/Aluminum Profile			
Full Extension Drawers @ 115° Door Opening Angle	Yes	Yes	Yes	Yes
General Use Drawer	2	2	2	2
Door Bins	4	4	4	3
External LED Proximity Sensor	No	No	No	No
Chilled Water, Crushed and Cubed Ice	No	No	No	No
Rapid Water Replenishment System	No	No	No	No
Ice Maker with Diamond Ice System	Yes	Yes	Yes	Yes
Door Open Alarm	Yes	Yes	Yes	Yes
Special Modes	Sabbath, Economy, Vacation			
Capacity				
Total Capacity (cu. ft.)	8.6 cu. ft.	12.2 cu. ft.	15.8 cu. ft.	19.4 cu. ft.
Performance				
Dedicated Evaporator & Compressor	Yes	Yes	Yes	Yes
SuperFreeze®	Yes	Yes	Yes	Yes
Defrost Process	Frost-Free	Frost-Free	Frost-Free	Frost-Free
Efficiency				
ENERGY STAR® Certified	Yes	Yes	Yes	Yes
Annual Energy Consumption	404 kWh	435 kWh	479 kWh	528 kWh
Dimensions				
Appliance Dimensions (H x W x D) (in.)	83 3/4"* x 17 3/4" x 24"	84"* x 23 3/4" x 24"	84"* x 29 3/4" x 24"	83 3/4"* x 35 3/4" x 24"
Required Cutout Size (H x W x D) (in.)	84" x 18" x 25"	84" x 24" x 25"	84" x 30" x 25"	84" x 36" x 25"

*Height adjustable + / -1/2" (+ / -13 mm)

Visit Thermador.com for complete specifications or text a Thermador model number to 21432 to have specs sent to your phone

BOTTOM FREEZERS QUICK REFERENCE CHART

Freedom® Refrigeration

	T30IB905SP 30-Inch 2-Door	T36IB905SP 36-Inch 2-Door	T36IT905NP / T36IT903NP 36-Inch French Door
Key Features			
Home Connect® (Wi-Fi Enabled)	Yes	Yes	Yes
Full Stainless Steel Inner Liner	Yes	Yes	Yes (T36IT905NP) No (T36IT903NP)
Open Door Assist	Yes	Yes	Yes (T36IT905NP) No (T36IT903NP)
General Properties			
Panel Ready	Yes	Yes	Yes
Reversible Door Swing	Yes	Yes	N/A
SoftClose® Door	Yes	Yes	Yes (T36IT905NP) No (T36IT903NP)
SoftClose® Drawers	Yes	Yes	Yes
Carbon Air Filter	Yes	Yes	Yes
Lighting	LED Sidewall and Theater Lighting		
Refrigerator Shelves	3 (2 Adj.)	3 (2 Adj.)	3 (2 Adj.)
Shelf Material	Glass w/Aluminum Profile		
Full Extension Drawers @ 90° and 115° Door Opening Angle	Yes	Yes	Yes
Adjustable Temperature Drawer	1	1	1
Humidity Managed Drawer	1	1	1
Door Bins – Refrigerator	3 (1 Gallon)	3 (1 Gallon)	6 (2 Gallon)
Defrost Process – Freezer	Frost-Free	Frost-Free	Frost-Free
Freezer Baskets	2	2	2
Ice Maker with Diamond Ice System	Yes	Yes	Yes
Door Open Alarms	Yes	Yes	Yes
SuperCool	Yes	Yes	Yes
SuperFreeze®	Yes	Yes	Yes
Special Modes	Sabbath, Economy, Vacation		
Capacity			
Total Capacity (cu. ft.)	16.0 cu. ft.	19.6 cu. ft.	19.4 cu. ft.
Freezer Capacity (cu. ft.)	4.5 cu. ft.	5.6 cu. ft.	5.5 cu. ft.
Refrigerator Capacity (cu. ft.)	11.5 cu. ft.	14.0 cu. ft.	13.9 cu. ft.
Efficiency			
ENERGY STAR® Certified	Yes	Yes	Yes
Annual Energy Consumption	470 kWh	504 kWh	579 kWh
Dimensions			
Appliance Dimensions (H x W x D) (in.)	83 3/4"* x 29 3/4" x 24"	83 3/4"* x 35 3/4" x 24"	83 3/4"* x 35 3/4" x 24"
Required Cutout Size (H x W x D) (in.)	84" x 30" x 25"	84" x 36" x 25"	84" x 36" x 25"

*Height adjustable + / -1/2" (+ / -13 mm)

Visit Thermador.com for complete specifications or text a Thermador model number to 21432 to have specs sent to your phone

PRE-ASSEMBLED BOTTOM FREEZERS QUICK REFERENCE CHART

Freedom® Refrigeration

T30BB925SS 30-Inch 2-Door Professional Handles	T30BB915SS 30-Inch 2-Door Masterpiece® Handles	T36BB925SS 36-Inch 2-Door Professional Handles	T36BB915SS 36-Inch 2-Door Masterpiece® Handles	T36BT925NS 36-Inch French Door Professional Handles	T36BT915NS 36-Inch French Door Masterpiece® Handles
Yes	Yes	Yes	Yes	Yes	Yes
Yes	Yes	Yes	Yes	Yes	Yes
Yes	Yes	Yes	Yes	Yes	Yes
N/A	N/A	N/A	N/A	N/A	N/A
Yes	Yes	Yes	Yes	N/A	N/A
Yes	Yes	Yes	Yes	Yes	Yes
Yes	Yes	Yes	Yes	Yes	Yes
Yes	Yes	Yes	Yes	Yes	Yes
LED Sidewall and Theater Lighting					
3 (2 Adj.)	3 (2 Adj.)	3 (2 Adj.)	3 (2 Adj.)	3 (2 Adj.)	3 (2 Adj.)
Glass w/Aluminum Profile					
Yes	Yes	Yes	Yes	Yes	Yes
1	1	1	1	1	1
1	1	1	1	1	1
3 (1 Gallon)	3 (1 Gallon)	3 (1 Gallon)	3 (1 Gallon)	6 (2 Gallon)	6 (2 Gallon)
Frost-Free	Frost-Free	Frost-Free	Frost-Free	Frost-Free	Frost-Free
2	2	2	2	2	2
Yes	Yes	Yes	Yes	Yes	Yes
Yes	Yes	Yes	Yes	Yes	Yes
Yes	Yes	Yes	Yes	Yes	Yes
Yes	Yes	Yes	Yes	Yes	Yes
Sabbath, Economy, Vacation					
16.0 cu. ft.	16.0 cu. ft.	19.6 cu. ft.	19.6 cu. ft.	19.4 cu. ft.	19.4 cu. ft.
4.5 cu. ft.	4.5 cu. ft.	5.6 cu. ft.	5.6 cu. ft.	5.5 cu. ft.	5.5 cu. ft.
11.5 cu. ft.	11.5 cu. ft.	14.0 cu. ft.	14.0 cu. ft.	13.9 cu. ft.	13.9 cu. ft.
Yes	Yes	Yes	Yes	Yes	Yes
470 kWh	470 kWh	504 kWh	504 kWh	579 kWh	579 kWh
83 3/4"* x 29 3/4" x 24 3/4"	83 3/4"* x 29 3/4" x 24 3/4"	83 3/4"* x 35 3/4" x 24 3/4"	83 3/4"* x 35 3/4" x 24 3/4"	83 3/4"* x 35 3/4" x 24 3/4"	83 3/4"* x 35 3/4" x 24 3/4"
84" x 30" x 25"	84" x 30" x 25"	84" x 36" x 25"	84" x 36" x 25"	84" x 36" x 25"	84" x 36" x 25"

Visit Thermador.com for complete specifications or text a Thermador model number to 21432 to have specs sent to your phone

FREESTANDING FRENCH DOOR BOTTOM FREEZER QUICK REFERENCE CHART

Refrigeration

	T36FT820NS 36-Inch French-Door Professional Handles	T36FT810NS 36-Inch French-Door Masterpiece® Handles
Key Features		
Home Connect® (Wi-Fi Enabled)	Yes	Yes
Full 72" Height and True Counter-Depth for Built-In Appearance	Yes	Yes
Stainless Steel ThermaFresh Mats	2	2
Dual Compressors / Evaporators	Yes	Yes
ThermaFresh Temperature & Humidity Managed Drawers	2	2
General Properties		
Carbon Air Filter & Ethylene Filter	Yes	Yes
Lighting	LED Recessed Side Light Bars & Fully Illuminated Back Panel	
Refrigerator Shelves	5 (4 Adj.)	5 (4 Adj.)
Shelf Material	Glass w/Metal Profile	Glass w/Metal Profile
Door Bins – Refrigerator	6 (2 Gallon)	6 (2 Gallon)
Defrost Process – Freezer	Automatic	Automatic
Freezer Drawers	3	3
Internal Water Dispenser	Yes	Yes
Water Filter	Yes	Yes
Ice Maker with Diamond Ice System	Yes	Yes
Door Open Alarm	Yes	Yes
SuperCool	Yes	Yes
SuperFreeze®	Yes	Yes
Special Modes	Sabbath, Economy, Vacation	
Capacity		
Total Capacity (cu. ft.)	20.8 cu. ft.	20.8 cu. ft.
Refrigerator / Freezer Capacity (cu. ft.)	14.8 / 6.0 cu. ft.	14.8 / 6.0 cu. ft.
Efficiency		
ENERGY STAR® Certified	Yes	Yes
Annual Energy Consumption	570 kWh	570 kWh
Dimensions		
Appliance Dimensions (H x W x D) (in.)	72"* x 35 5/8" x 31 7/16"	72"* x 35 5/8" x 31 7/16"
Appliance Dimensions without Hinges and Doors (H x W x D) (in.)	71 1/2" x 35 5/8" x 24"**	71 1/2" x 35 5/8" x 24"**
Appliance Dimensions with Hinges and Doors, No Handles (H x W x D) (in.)	72"* x 35 5/8" x 28 3/4"	72"* x 35 5/8" x 28 3/4"
Required Cutout Size (H x W x D) (in.)	72" x 36" x 25"	72" x 36" x 25"

*When leveling legs are fully extended, add 5/8" to overall height, total 72 5/8". ** The cutout depth of 25" includes the required 1" airflow. The electrical covers on the back of unit do not require additional depth.

Visit Thermador.com for complete specifications or text a Thermador model number to 21432 to have specs sent to your phone

PLANNING CHECKLIST

Freedom® Collection

This custom product requires attention to the finest details. Did you remember to…?

- ☐ Choose a desired configuration – side-by-side or stand-alone columns (See pages 182–189 for details)
- ☐ Plan the cutout height(s) – 84" (See pages 194–197 for details)
- ☐ Plan the cutout width(s) – depends on configuration and column width (See pages 194–197 for details)
- ☐ Plan the cutout depth – 25" for North American style cabinets, 24" with installation frame accessory, 24" for European style cabinets (See pages 196–199 for details)
- ☐ Ensure the cutout interior (top and sides) is flush to the appliance at a depth of min. 4", preferably 6" from face frame (See pages 196–199 for details)
- ☐ Ensure the cutout interior returns (top and sides) are finished to match exterior at a depth of min. 4", preferably 6" from face frame (See pages 196–199 for details)
- ☐ Ensure proper clearance for appliance doors including handle(s) – check for interference with other appliances, open or closed cabinets and doors, nearby walls (See page 201 for details)
- ☐ Properly site the electrical outlet and (if applicable) water box (See pages 194–195 for details)
- ☐ Ensure the reverse of any custom panel is finished to match the exterior
- ☐ Choose the handle style – Professional, Masterpiece® or custom
- ☐ Choose the correct handle length. Typically, all columns would use a 36" handle. The 30" handle must be used on the 30" bottom freezer drawer.
- ☐ Choose the toekick style – stainless (included with appliance) or design custom toekick(s) (See page 200 for details)
- ☐ Procure the proper installation accessories – stainless steel frame kit (FRAMEKIT10) for framed installations in 24-inch deep cutouts, heater kit (HEATRKIT20) for installations where two appliances are installed side-by-side or instances where any appliances are installed less than 6" apart from another but not connected. The heater kit is also recommended for use with any installation in areas that are subject to humidity, or located next to an outside wall. (See page 189 for details)

APPLIANCE OVERVIEW

Freedom® Collection

Fresh Food Columns

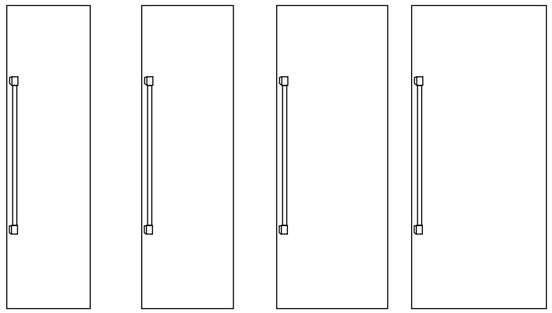

T23IR905SP	T24IR905SP	T30IR905SP	T36IR905SP
23.5-Inch	24-Inch	30-Inch	36-Inch
Reversible Door Swing	Reversible Door Swing	Reversible Door Swing	Reversible Door Swing
Build Your Custom Column	Build Your Custom Column	Build Your Custom Column	Build Your Custom Column

Wine Preservation Columns

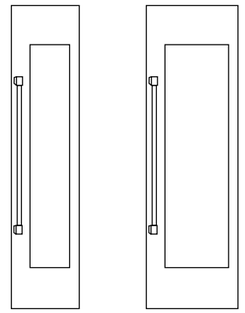

T18IW905SP	T24IW905SP
18-Inch	24-Inch
Reversible Door Swing	Reversible Door Swing
Build Your Custom Column	Build Your Custom Column

★ *Planning Tip*

A Frame Kit enables installation of all Freedom Columns in 24-inch deep cutouts. See page 189 for details.

Freezer Columns with External Dispenser

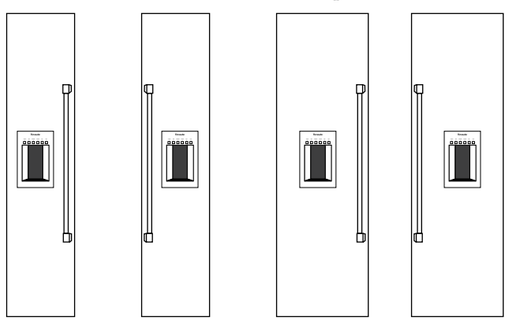

T18ID905LP	T18ID905RP	T24ID905LP	T24ID905RP
18-Inch	18-Inch	24-Inch	24-Inch
External Ice & Water Dispenser	External Ice & Water Dispenser	External Ice & Water Dispenser	External Ice & Water Dispenser
Left-Hand Door Swing	Right-Hand Door Swing	Left-Hand Door Swing	Right-Hand Door Swing
Build Your Custom Column	Build Your Custom Column	Build Your Custom Column	Build Your Custom Column

Freezer Columns with Internal Ice Maker

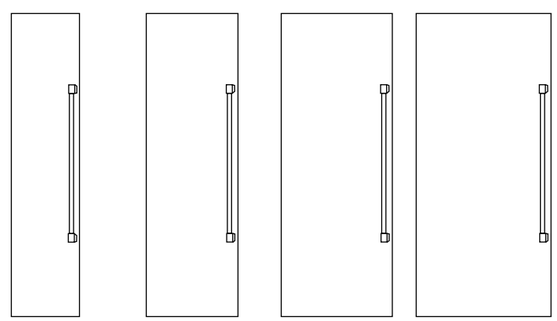

T18IF905SP	T24IF905SP	T30IF905SP	T36IF905SP
18-Inch	24-Inch	30-Inch	36-Inch
Internal Ice Maker	Internal Ice Maker	Internal Ice Maker	Internal Ice Maker
Reversible Door Swing	Reversible Door Swing	Reversible Door Swing	Reversible Door Swing
Build Your Custom Column	Build Your Custom Column	Build Your Custom Column	Build Your Custom Column

APPLIANCE OVERVIEW

Freedom® Collection

Bottom Freezers

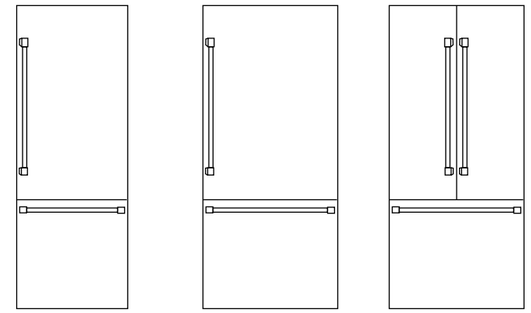

T30IB905SP	T36IB905SP	T36IT905NP / T36IT903NP
30-Inch 2-Door	36-Inch 2-Door	36-Inch French Door
Reversible Door Swing	Reversible Door Swing	—
Build Your Custom Column	Build Your Custom Column	Build Your Custom Column

Freestanding French Door Bottom Freezers

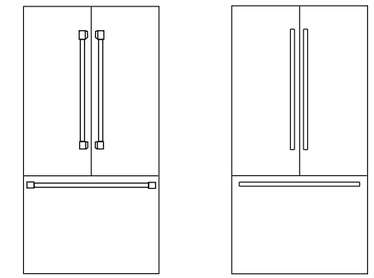

T36FT820NS	T36FT810NS
36-Inch French Door	36-Inch French Door
Freestanding, Counter-depth	Freestanding, Counter-depth
Stainless Steel	Stainless Steel
Professional Handles	Masterpiece® Handles

*Pre-Assembled Bottom Freezers**

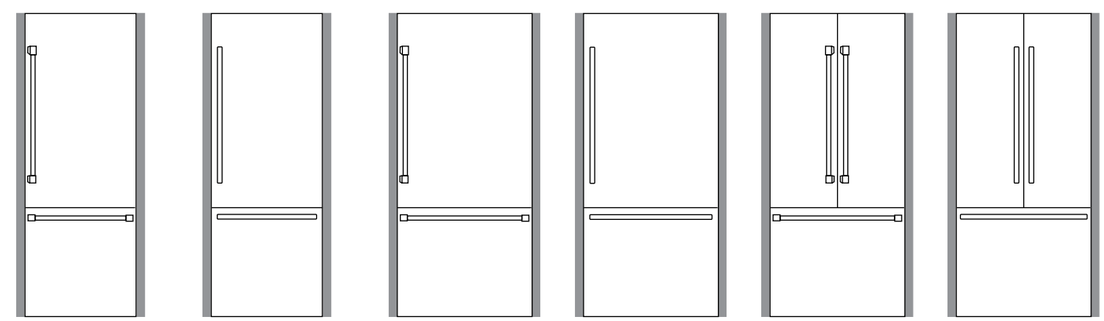

T30BB925SS	T30BB915SS	T36BB925SS	T36BB915SS	T36BT925NS	T36BT915NS
30-Inch 2-Door	30-Inch 2-Door	36-Inch 2-Door	36-Inch 2-Door	36-Inch French Door	36-Inch French Door
Reversible Door Swing	Reversible Door Swing	Reversible Door Swing	Reversible Door Swing	—	—
Flat Stainless Steel Panels	Flat Stainless Steel Panels	Flat Stainless Steel Panels	Flat Stainless Steel Panels	Flat Stainless Steel Panels	Flat Stainless Steel Panels
Professional Handles	Masterpiece® Handles	Professional Handles	Masterpiece® Handles	Professional Handles	Masterpiece® Handles

*Pre-assembled bottom freezers can be installed flush in 25-inch deep cutouts or with included frame in 24-inch deep cutouts.

BUILDING YOUR CUSTOM COLUMN

Freedom® Collection

Choose Unit		*Choose Panel* (All units are panel ready for custom panel installation)
Fresh Food Column – Fully Flush Collection		
23.5-Inch	T23IR905SP Reversible Door Swing Custom Column	Flat Stainless Steel Door Panel TFL23IR900 – For use with Handle TFL23IR905 – Handleless
24-Inch	T24IR905SP Reversible Door Swing Custom Column	Flat Stainless Steel Door Panel TFL24IR800 – For use with Handle TFL24IR905 – Handleless
30-Inch	T30IR905SP Reversible Door Swing Custom Column	Flat Stainless Steel Door Panel TFL30IR800 – For use with Handle TFL30IR905 – Handleless
36-Inch	T36IR905SP Reversible Door Swing Custom Column	Flat Stainless Steel Door Panel TFL36IR900 – For use with Handle TFL36IR905 – Handleless
Freezer Column with External Dispenser – Fully Flush Collection		
18-Inch	T18ID905LP Left-Hand Door Swing External Ice & Water Dispenser Custom Column	Flat Stainless Steel Door Panel TFL18ID800 – For use with Handle TFL18ID905 – Handleless
	T18ID905RP Right-Hand Door Swing External Ice & Water Dispenser Custom Column	Flat Stainless Steel Door Panel TFL18ID800 – For use with Handle TFL18ID905 – Handleless
24-Inch	T24ID905LP Left-Hand Door Swing External Ice & Water Dispenser Custom Column	Flat Stainless Steel Door Panel TFL24ID800 – For use with Handle TFL24ID905 – Handleless
	T24ID905RP Right-Hand Door Swing External Ice & Water Dispenser Custom Column	Flat Stainless Steel Door Panel TFL24ID800 – For use with Handle TFL24ID905 – Handleless

Choose Handle and Optional Frame

NOTE: Choose one handle for each column.

Professional
PR36HNDL20 – 36-Inch Professional

Masterpiece®
MS36HNDL20 – 36-Inch Masterpiece

Freedom® Frame Kit
FRAMEKIT10
Included with all pre-assembled bottom freezers, this adjustable frame is also available as an optional accessory for use with any custom column for installation in 24-inch (610 mm) deep cutouts. The kit includes two identical and reversible metal side trims whose placement between the interior cutout wall and the appliance helps overcome the challenge of unfinished cabinet returns.

IMPORTANT: When two appliances are installed side-by-side a sealing kit must be used. For combinations that involve a freezer column, this kit is included. For all other (non-traditional, i.e. two wine columns, two bottom freezers, etc.) side-by-side combinations or instances where any appliances are installed less than 6-inches (152 mm) apart from one another but not connected side-by-side, Heater Kit HEATRKIT20 (13W @ 120V) must be purchased. This kit is recommended for use with any installation in areas that are subject to humidity, or located next to an outside wall. See page 189 for details.

BUILDING YOUR CUSTOM COLUMN

Freedom® Collection

Choose Unit		*Choose Panel* (All units are panel ready for custom panel installation)
Freezer Column with Internal Ice Maker – Fully Flush Collection		
18-Inch	T18IF905SP Reversible Door Swing Internal Diamond Ice Maker Custom Column	Flat Stainless Steel Door Panel TFL18IR800 – For use with Handle TFL18IR905 – Handleless
24-Inch	T24IF905SP Reversible Door Swing Internal Diamond Ice Maker Custom Column	Flat Stainless Steel Door Panel TFL24IR800 – For use with Handle TFL24IR905 – Handleless
30-Inch	T30IF905SP Reversible Door Swing Internal Diamond Ice Maker Custom Column	Flat Stainless Steel Door Panel TFL30IR800 – For use with Handle TFL30IR905 – Handleless
36-Inch	T36IF905SP Reversible Door Swing Internal Diamond Ice Maker Custom Column	Flat Stainless Steel Door Panel TFL36IR900 – For use with Handle TFL36IR905 – Handleless
Wine Preservation – Fully Flush Collection		
18-Inch	T18IW905SP Reversible Door Swing Custom Column	Flat Stainless Steel Door Panel TFL18IW800 – For use with Handle TFL18IW905 – Handleless
24-Inch	T24IW905SP Reversible Door Swing Custom Column **with Home Connect®	Flat Stainless Steel Door Panel TFL24IW800 – For use with Handle TFL24IW905 – Handleless

Choose Handle and Optional Frame

NOTE: Choose one handle for each column.

Professional
PR36HNDL20 – 36-Inch Professional

Masterpiece®
MS36HNDL20 – 36-Inch Masterpiece

Freedom® Frame Kit
FRAMEKIT10
Included with all pre-assembled bottom freezers, this adjustable frame is also available as an optional accessory for use with any custom column for installation in 24-inch (610 mm) deep cutouts. The kit includes two identical and reversible metal side trims whose placement between the interior cutout wall and the appliance helps overcome the challenge of unfinished cabinet returns.

IMPORTANT: When two appliances are installed side-by-side a sealing kit must be used. For combinations that involve a freezer column, this kit is included. For all other (non-traditional, i.e. two wine columns, two bottom freezers, etc.) side-by-side combinations or instances where any appliances are installed less than 6-inches (152 mm) apart from one another but not connected side-by-side, Heater Kit HEATRKIT20 (13W @ 120V) must be purchased. This kit is recommended for use with any installation in areas that are subject to humidity, or located next to an outside wall. See page 189 for details.

BUILDING YOUR CUSTOM COLUMN

Freedom® Collection

Choose Unit		*Choose Panel* (All units are panel ready for custom panel installation)	
Bottom Freezer – Fully Flush Collection			
30-Inch	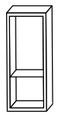 T30IB905SP 2-Door Reversible Door Swing Custom Column	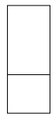	Flat Stainless Steel Door Panel TFL30IB800 – For use with Handle TFL30IB905 – Handleless
36-Inch	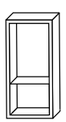 T36IB905SP 2-Door Reversible Door Swing Custom Column	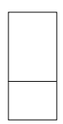	Flat Stainless Steel Door Panel TFL36IB800 – For use with Handle TFL36IB905 – Handleless
36-Inch	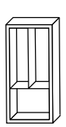 T36IT905NP T36IT903NP French Door Custom Column	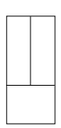	Flat Stainless Steel Door Panel TFL36IT800 – For use with Handle TFL36IT905 – Handleless

Choose Handle and Optional Frame

NOTE: Choose your handle style and then 2 handles for each 2-door bottom freezer and 3 handles for each French Door bottom freezer.

Professional
PR36HNDL20 – 36-Inch Professional
PR30HNDL20 – 30-Inch Professional

Masterpiece®
MS36HNDL20 – 36-Inch Masterpiece
MS30HNDL20 – 30-Inch Masterpiece

30-Inch 2-Door Bottom Freezers
Choose One 36" Handle and One 30" Handle

36-Inch 2-Door Bottom Freezers
Choose Two 36" Handles

36-Inch French Door Bottom Freezers
Choose Three 36" Handles

Freedom® Frame Kit
FRAMEKIT10
Included with all pre-assembled bottom freezers, this adjustable frame is also available as an optional accessory for use with any custom column for installation in 24-inch (610 mm) deep cutouts. The kit includes two identical and reversible metal side trims whose placement between the interior cutout wall and the appliance helps overcome the challenge of unfinished cabinet returns.

IMPORTANT: When two appliances are installed side-by-side a sealing kit must be used. For combinations that involve a freezer column, this kit is included. For all other (non-traditional, i.e. two wine columns, two bottom freezers, etc.) side-by-side combinations or instances where any appliances are installed less than 6-inches (152 mm) apart from one another but not connected side-by-side, Heater Kit HEATRKIT20 (13W @ 120V) must be purchased. This kit is recommended for use with any installation in areas that are subject to humidity, or located next to an outside wall. See page 189 for details.

BUILDING YOUR CUSTOM COLUMN

Freedom® Collection

Choose Unit

Pre-Assembled Bottom Freezer – Fully Flush Collection

A frame is attached to all pre-assembled models. It is removable if a flush installation in a 25" deep cabinet is desired.

30-Inch		T30BB925SS 2-Door Professional Handles	Reversible Door Swing Flat Stainless Steel Panels Removable Frame
30-Inch	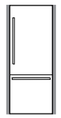	T30BB915SS 2-Door Masterpiece® Handles	Reversible Door Swing Flat Stainless Steel Panels Removable Frame
36-Inch		T36BB925SS 2-Door Professional Handles	Reversible Door Swing Flat Stainless Steel Panels Removable Frame
36-Inch		T36BB915SS 2-Door Masterpiece® Handles	Reversible Door Swing Flat Stainless Steel Panels Removable Frame
36-Inch	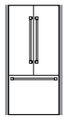	T36BT925NS French Door Professional Handles	Flat Stainless Steel Panels Removable Frame
36-Inch	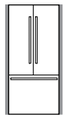	T36BT910NS French Door Masterpiece® Handles	Flat Stainless Steel Panels Removable Frame

IMPORTANT: When two appliances are installed side-by-side a sealing kit must be used. For combinations that involve a freezer column, this kit is included. For all other (non-traditional, i.e. two wine columns, two bottom freezers, etc.) side-by-side combinations or instances where any appliances are installed less than 6-inches (152 mm) apart from one another but not connected side-by-side, Heater Kit HEATRKIT20 (13W @ 120V) must be purchased. This kit is recommended for use with any installation in areas that are subject to humidity, or located next to an outside wall. See page 189 for details.

Customize The Interior

Optional Storage Accessories

Fresh Food Columns, Bottom Freezers and Pre-assembled Bottom Freezers

SPRODBIN10
Small Delicate
Produce Bin

LPRODBIN10
Large Delicate
Produce Bin

24PRODRAIL
24-Inch
Produce Bin Railing

30PRODRAIL
30-Inch
Produce Bin Railing

36PRODRAIL
36-Inch
Produce Bin Railing

3DPRODRAIL
French Door
Produce Bin Railing

24HFGALBIN
24-Inch
Half Gallon Bin

30HFGALBIN
30-Inch
Half Gallon Bin

36HFGALBIN
36-Inch
Half Gallon Bin

3DHFGALBIN
French Door
Half Gallon Bin

Freezer Columns, Bottom Freezers and Pre-assembled Bottom Freezers

ICEBUCKETL
Large Ice Bucket

COMMON CONFIGURATIONS

Freedom® Collection

The Thermador® Freedom® Collection uses independent columns that create unlimited flexibility in both function and design. Some suggested pairings are listed below. A special kit is included with all freezer columns to simplify traditional side-by-side refrigerator / freezer combinations. When combining two appliances where one is not a freezer column or if any two units are installed less than 6" (152 mm) apart from one another but not connected side-by-side, always use the Heater Kit (HEATRKIT20) to guard against damaging condensation build-up.

42-Inch

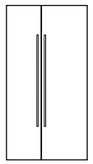

18-Inch
Freezer Column
T18IF905SP

24-Inch Fresh
Food Column
T24IR905SP

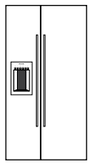

18-Inch
Freezer Column
T18ID905LP

24-Inch Fresh
Food Column
T24IR905SP

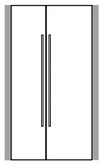

18-Inch
Freezer Column
T18IF905SP

24-Inch Fresh
Food Column
T24IR905SP

Shown with
FRAMEKIT10

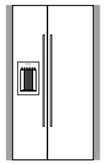

18-Inch
Freezer Column
T18ID905LP

24-Inch Fresh
Food Column
T24IR905SP

Shown with
FRAMEKIT10

48-Inch

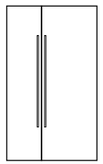

18-Inch
Freezer Column
T18IF905SP

30-Inch Fresh
Food Column
T30IR905SP

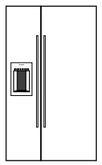

18-Inch
Freezer Column
T18ID905LP

30-Inch Fresh
Food Column
T30IR905SP

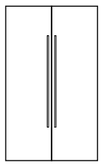

24-Inch
Freezer Column
T24IF905SP

24-Inch Fresh
Food Column
T24IR905SP

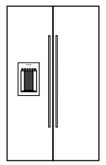

24-Inch
Freezer Column
T24ID905LP

24-Inch Fresh
Food Column
T24IR905SP

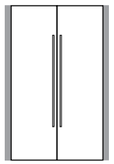

24-Inch
Freezer Column
T24IF905SP

24-Inch Fresh
Food Column
T24IR905SP

Shown with
FRAMEKIT10

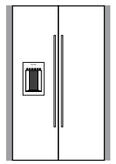

24-Inch
Freezer Column
T24IF905SP

24-Inch Fresh
Food Column
T24IR905SP

Shown with
FRAMEKIT10

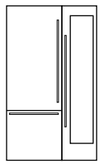

30-Inch* 2-Door
Bottom Freezer
T30IB905SP

18-Inch* Wine
Preservation Column
T18IW905SP

54-Inch

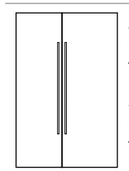

24-Inch
Freezer Column
T24IF905SP

30-Inch Fresh
Food Column
T30IR905SP

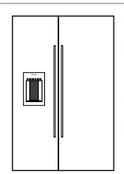

24-Inch
Freezer Column
T24ID905LP

30-Inch Fresh
Food Column
T30IR905SP

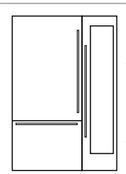

36-Inch* 2-Door
Bottom Freezer
T36IB905SP

18-Inch* Wine
Preservation Column
T18IW905SP

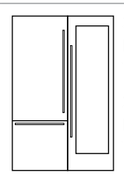

30-Inch* 2-Door
Bottom Freezer
T30IB905SP

24-Inch* Wine
Preservation Column
T24IW905SP

60-Inch

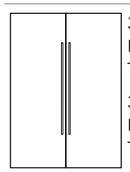

30-Inch
Freezer Column
T30IF905SP

30-Inch Fresh
Food Column
T30IR905SP

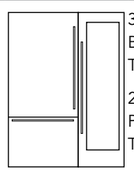

36-Inch* 2-Door
Bottom Freezer
T36IB905SP

24-Inch* Wine
Preservation Column
T24IW905SP

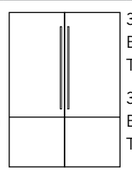

30-Inch* 2-Door
Bottom Freezer
T30IB905SP

30-Inch* 2-Door
Bottom Freezer
T30IB905SP

*Requires Heater Kit HEATERKIT20

COMMON CONFIGURATIONS

Freedom® Collection

You don't need to remodel your kitchen to enjoy complete personalization. The specially-designed 23.5" refrigerator unit features the same interior capacity as a 24" column, but has been crafted to seamlessly pair with any 18" and 24" freezer. Together, they will perfectly fit into predetermined 42" or 48" spaces—without the need to adjust existing cabinetry.

42-Inch (41.5-Inch Predetermined Spaces / Replacement Installation)

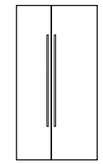

18-Inch
Freezer Column
T18IF905SP

23.5-Inch Fresh
Food Column
T23IR905SP

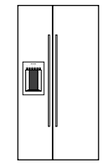

18-Inch
Freezer Column
T18ID905LP

23.5-Inch Fresh
Food Column
T23IR905SP

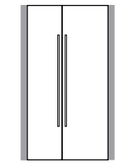

18-Inch
Freezer Column
T18IF905SP

23.5-Inch Fresh
Food Column
T23IR905SP

Shown with
FRAMEKIT10

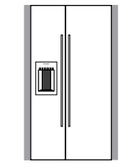

18-Inch
Freezer Column
T18ID905LP

23.5-Inch Fresh
Food Column
T23IR905SP

Shown with
FRAMEKIT10

48-Inch (47.5-Inch Predetermined Spaces / Replacement Installation)

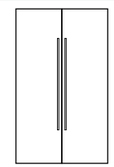

24-Inch
Freezer Column
T24IF905SP

23.5-Inch Fresh
Food Column
T23IR905SP

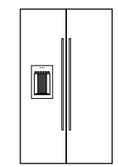

24-Inch
Freezer Column
T24ID905LP

23.5-Inch Fresh
Food Column
T23IR905SP

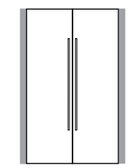

24-Inch
Freezer Column
T24IF905SP

23.5-Inch Fresh
Food Column
T23IR905SP

Shown with
FRAMEKIT10

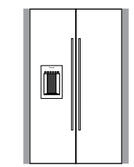

24-Inch
Freezer Column
T24ID905LP

23.5-Inch Fresh
Food Column
T23IR905SP

Shown with
FRAMEKIT10

Installation Accessories

Freedom® Frame Kit

FRAMEKIT10

Included with all pre-assembled bottom freezers, this adjustable frame is also available as an optional accessory for use with any custom column for installation in 24-inch (610 mm) deep cutouts. The kit includes two identical and reversible metal side trims whose placement between the interior cutout wall and the appliance helps overcome the challenge of unfinished cabinet returns.

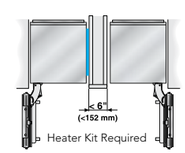

Freedom® Heater Kit

HEATRKIT20 – 13W @ 120V

When two appliances are installed side-by-side a sealing kit must be used. For combinations that involve a freezer column, this kit is included. For all other (non-traditional, i.e. two wine columns, two bottom freezers, etc.) side-by-side combinations or instances where any appliances are installed less than 6-inches (152 mm) apart from one another but not connected side-by-side, purchase this kit. This kit is recommended for use with any installation in areas that are subject to humidity, or located next to an outside wall.

OPTIONAL ACCESSORIES

Freedom® Collection

Flat Stainless Steel Door Panels

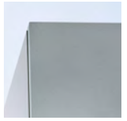

Fresh Food – For Use with Handle
TFL23IR900 – 23.5-Inch
TFL24IR800 – 24-Inch
TFL30IR800 – 30-Inch
TFL36IR900 – 36-Inch

Fresh Food – Handleless
TFL23IR905 – 23.5-Inch
TFL24IR905 – 24-Inch
TFL30IR905 – 30-Inch
TFL36IR905 – 36-Inch

Freezer – For Use with Handle
TFL18ID800 – 18-Inch with Dispenser
TFL18IR800 – 18-Inch without Dispenser
TFL24ID800 – 24-Inch with Dispenser
TFL24IR800 – 24-Inch without Dispenser
TFL30IR800 – 30-Inch without Dispenser
TFL36IR900 – 36-Inch without Dispenser

Freezer – Handleless
TFL18ID905 – 18-Inch with Dispenser
TFL18IR905 – 18-Inch without Dispenser
TFL24ID905 – 24-Inch with Dispenser
TFL24IR905 – 24-Inch without Dispenser
TFL30IR905 – 30-Inch without Dispenser
TFL36IR905 – 36-Inch without Dispenser

Wine Preservation – For Use with Handle
TFL18IW800 – 18-Inch
TFL24IW800 – 24-Inch

Wine Preservation – Handleless
TFL18IW905 – 18-Inch
TFL24IW905 – 24-Inch

Bottom Freezer – For Use with Handle
TFL30IB800 – 30-Inch 2-Door
TFL36IB800 – 36-Inch 2-Door
TFL36IT800 – 36-Inch French Door

Bottom Freezer – Handleless
TFL30IB905 – 30-Inch 2-Door
TFL36IB905 – 36-Inch 2-Door
TFL36IT905 – 36-Inch French Door

Freedom Columns and Bottom Freezer Handles

NOTE: Choose one handle for each column or custom panel glass door under-counter model, choose 2 handles for each 2-door bottom freezer and choose 3 handles for each French Door bottom freezer. Handle kits for custom panel double drawer under-counter models include 2 handles.

Professional Series
PR36HNDL20 – 36-Inch Professional

Masterpiece® Series
MS36HNDL20 – 36-Inch Masterpiece

Professional Series
PR30HNDL20 – 30-Inch Professional

Masterpiece® Series
MS30HNDL20 – 30-Inch Masterpiece

Freedom Under-Counter

Professional Series Handle (25 13/16" wide) – Custom Panel Glass Door
PR22HNDL25

Professional Series Handle Kit, Set of 2 (20 13/16" wide) – Custom Panel Double Drawer
PR20HNDL20

Masterpiece® Series Handle (25 1/2" wide) – Custom Panel Glass Door
MS22HNDL25

Masterpiece® Series Handle Kit, Set of 2 (20 1/2" wide) – Custom Panel Double Drawer
MS20HNDL20

Wine Preservation Shelf

Additional wine shelf increases capacity to 99 bottles on 24-Inch column and 62 bottles on 18-Inch column (750mL bottles).

18-Inch Wine Column Shelf
T18WINERK1

24-Inch Wine Column Shelf
T24WINERK1

Water Filters

Replacement water filter for use in all freezer and bottom freezer models for built-in and freestanding.
REPLFLTR55

Replacement water filter for use in under-counter double drawer refrigerator / freezers T24UC925DS, T24UC915DS, T24UC905DP
UCTRFLTR10

See page 187 for interior storage accessories.

PLANNING INFORMATION

Freedom® Collection

Installation Considerations

Location

The appliance should be installed in a dry, ventilated room. It may not be installed outdoors. The ambient temperature of the room must be between 55°F (13°C) and 100°F (43°C).

The appliance should not be exposed to constant direct sunlight or excessive heat. If installation next to a heat source, such as an oven, radiator, etc. is unavoidable, observe the following minimum distances from the heat source:

- 1 1/4" (30 mm) from an electric cooking appliance,
- 11 13/16" (300 mm) from an oil or solid-fuel cooking appliance.

Installation and Cutout Dimensions

Please see pages 194–199 for complete cutout planning information.

It is important to observe the specified dimensions of the installation cutout for a trouble-free installation of the appliance and for the subsequent appearance of the door panel.

- In particular ensure that the cutout is square. Squareness can be checked by suitable means, e.g. spirit level, diagonal measurements, etc.
- The side walls of the cutout must be flush. The minimum thickness of the side and top walls is 5/8" (16 mm). The minimum thickness of toekick panel is 1/4" (6 mm).

Furniture / Fixtures

During installation, the appliance is fastened to adjacent and overhead furniture / fixtures and it is therefore essential that all such furniture / fixtures are well secured to the substructure or adjacent wall.

Flooring / Substructure

On account of the heavy weight of a fully loaded appliance, a load-bearing substructure is required. To ensure correct installation and function, the support must be flat, level and made of hard, rigid material. If in doubt, contact an architect or a building expert.

Refer to the following table for load-bearing capacity:

Appliance	*Load Bearing Capacity*
23.5-Inch Fresh Food Column	945 lbs. / 429 kg
24-Inch Fresh Food Column	949 lbs. / 431 kg
30-Inch Fresh Food Column	1,097 lbs. / 498 kg
36-Inch Fresh Food Column	1,363 lbs. / 618 kg
18-Inch Freezer Column	774 lbs. / 351 kg*
24-Inch Freezer Column	958 lbs. / 435 kg*
30-Inch Freezer Column	1,116 lbs. / 507 kg
36-Inch Freezer Column	1,353 lbs. / 614 kg
18-Inch Wine Preservation Column	840 lbs. / 381 kg
24-Inch Wine Preservation Column	1,067 lbs. / 484 kg
30-Inch Bottom Freezer, 2-Door	1,135 lbs. / 515 kg**
36-Inch Bottom Freezer, 2-Door	1,399 lbs. / 635 kg**
36-Inch Bottom Freezer, French Door	1,382 lbs. / 627 kg**

*Without water dispenser **Pre-assembled units

INSTALLATION OPTIONS

Freedom® Collection

The Freedom® Collection offers a variety of installation possibilities*. In some instances, special accessories are required.

Recommended Installations		*Considerations*
Stand-Alone	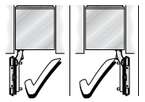	Any Freedom appliance can be installed as a stand-alone unit. Ensure a cutout flush to the appliance at a depth of minimum 4" (102 mm), preferably 6" (152 mm) on the top and sides.
Side-By-Side		When two appliances are installed side-by-side a sealing kit must be used. For combinations that involve a freezer column, this kit is provided. For all other (non-traditional) side-by-side combinations or instances where any appliances are installed less than 6" (152 mm) apart from one another but not connected side-by-side, purchase the Heater Kit (HEATRKIT20).
Split Columns with Partition	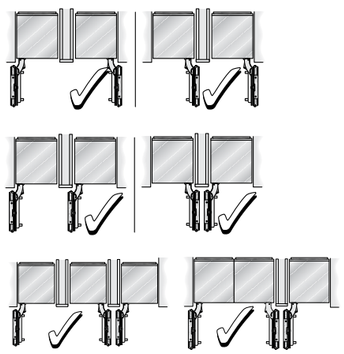	When dimensioning the partition, note the thickness of the door panel (including handles) as well as the swivel range to prevent damage if the doors are opened at the same time. (See page 201 for details on door swivel range dimensions) Three appliances can be installed together only if a partition—minimum 5/8" (16 mm)—is placed between two of the appliances. Ensure that door panel thickness (including handles) as well as the swivel range are accounted for.
At The End of a Cabinetry Run		All Freedom appliances must be completely enclosed on the top and sides. If one side of the appliance is visible, a decorative side panel must be used. The side panel must be connected firmly to the wall, the floor and any overhead furniture / fixtures before the appliance is placed in the cutout.

Recommended Installations	*Concerns*
	It is absolutely essential to ensure that the appliance is installed in such a way that the doors do not interfere with an adjacent wall or other kitchen elements. (See page 201 for details on door swivel range dimensions)
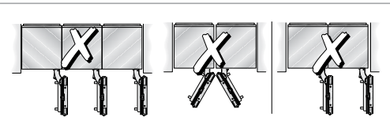	A partition—minimum 5/8" (16 mm)—is required to ensure the doors do not interfere with one another when opened. Use a partition to separate appliances and observe the door swivel range. (See page 201 for details on door swivel range dimensions)
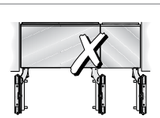	A Thermador French Door Bottom Freezer cannot be connected side-by-side with any other appliance. Use a partition to separate appliances and observe the door swivel range. (See page 201 for details on door swivel range dimensions)

*The Thermador warranty shall apply only to recommended installations.

DOOR PANEL DIMENSIONS

Freedom® Collection

Each Freedom® Collection refrigeration appliance is designed to be equipped with a decorative door panel. A panel can be custom-made or purchased as a stainless steel accessory. The table below illustrates the dimensions of the stainless steel panel accessories and can be used as a guide in creating custom panels. At 79 7/8" (2029 mm) tall, they are designed for a toekick height of 4" (102 mm), and a total cutout height of 84" (2134 mm) yielding 1/8" (3 mm) reveals. At 3/4" (19 mm) deep, they are designed to attach to the 24" (610 mm) deep appliance for an overall depth of 24 3/4" (629 mm). See page 194 for cutout planning.

When using custom panels, always ensure that the panel reverse is finished to match the exterior, as parts of the panel reverse will be visible when the refrigerator door is opened.

IMPORTANT: While these sketches can serve as a general guide in planning panel dimensions, the correct panel dimensions are dictated by design choices including style and dimensions of surrounding kitchen cabinetry, case and toekick height, etc. Please ensure careful planning based on the specific kitchen design.

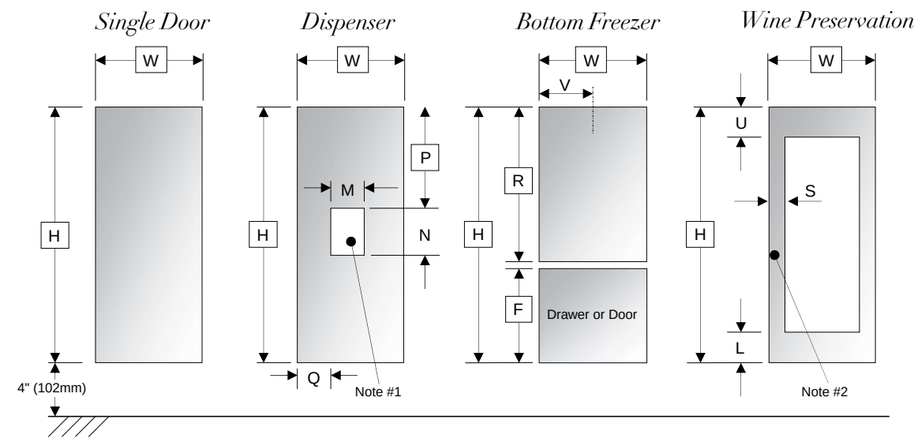

DESCRIPTION	H	W	V	R	F	M	N	P	Q	U	L	S	MAX. PANEL WEIGHT
18-Inch Freezer Column	79 7/8" (2029 mm)	17 3/4" (451 mm)	—	—	—	—	—	—	—	—	—	—	120 lbs. (54kg)
23.5-Inch Fresh Food Column	79 7/8" (2029 mm)	23 17/64* (591 mm)	—	—	—	—	—	—	—	—	—	—	80 lbs. (36kg)
24-Inch Freezer / Fresh Food Columns	79 7/8" 2029 mm)	23 3/4" (603 mm)	—	—	—	—	—	—	—	—	—	—	80 lbs. (36kg)
30-Inch Freezer / Fresh Food Columns	79 7/8" (2029 mm)	29 3/4" (756 mm)	—	—	—	—	—	—	—	—	—	—	50 lbs. (23kg)
36-Inch Freezer / Fresh Food Columns	79 7/8" (2029 mm)	35 3/4" (908 mm)	—	—	—	—	—	—	—	—	—	—	80 lbs. (36kg)
18-Inch Ice & Water Dispenser Columns	79 7/8" (2029 mm)	17 3/4" (451 mm)	—	—	—	9 1/16" (230.5 mm)	14 1/2" (368.3 mm)	32 11/16" (830.5 mm)	4 11/32" (110 mm)	—	—	—	150 lbs. (68kg)
24-Inch Ice & Water Dispenser Columns	79 7/8" (2029 mm)	23 3/4" (603 mm)	—	—	—	9 1/16" (230.5 mm)	14 1/2" (368.3 mm)	32 11/16" (830.5 mm)	7 11/32" (186 mm)	—	—	—	150 lbs. (68kg)
30-Inch Two-Door Bottom Freezer	79 7/8" (2029 mm)	29 3/4" (756 mm)	—	51 11/32" (1304 mm)	28 13/32" (722 mm)	—	—	—	—	—	—	—	Door: 90 lbs. (41kg) Drawer: 20 lbs. (9kg)
36-Inch Two-Door Bottom Freezer	79 7/8" (2029 mm)	35 3/4" (908 mm)	—	51 11/32" (1304 mm)	28 13/32" (722 mm)	—	—	—	—	—	—	—	Door: 55 lbs. (25kg) Drawer: 22 lbs. (10kg)
36-Inch French Door Bottom Freezer	79 7/8" (2029 mm)	35 3/4" (908 mm)	17 3/4" (451 mm)	51 11/32" (1304 mm)	28 13/32" (722 mm)	—	—	—	—	—	—	—	Door: 140 lbs. (63kg) Drawer: 22 lbs. (10kg)
18-Inch Wine Preservation Column	79 7/8" (2029 mm)	17 3/4" (451 mm)	—	—	—	—	—	—	—	10 1/8" (257 mm)	10 1/8" (257 mm)	3 3/4" (95 mm)	150 lbs. (68kg)
24-Inch Wine Preservation Column	79 7/8" (2029 mm)	23 3/4" (603 mm)	—	—	—	—	—	—	—	10 1/8" (257 mm)	10 1/8" (257 mm)	3 3/4" (95 mm)	150 lbs. (68kg)

NOTE #1: The cutout for the dispenser unit must be horizontally and vertically centered in the panel.
NOTE #2: For custom wine preservation column door panels, the width of the two lateral flanges of the frame may vary between 2 1/2" (64 mm) and 3 3/4" (95 mm).

Electrical Specifications

The appliance comes with a 3-wire power supply cord. UL listed in the USA.

Each appliance requires a separate 3-wire receptacle that is fitted with a 15 Amp fuse or higher. Refer to the following table for max load details.

Appliance	*Max load*
	120V AC, 60Hz
23.5-Inch Fresh Food Column	15 A
24-Inch Fresh Food Column	15 A
30-Inch Fresh Food Column	15 A
36-Inch Fresh Food Column	15 A
18-Inch Freezer Column*	15 A
24-Inch Freezer Column*	15 A
30-Inch Freezer Column*	15 A
36-Inch Freezer Column*	15 A
18-Inch Wine Preservation Column	15 A
24-Inch Wine Preservation Column	15 A
30-Inch 2-Door Bottom Freezer*	15 A
36-Inch 2-Door Bottom Freezer*	15 A
36-Inch French Door Bottom Freezer*	15 A

*Including ice maker

The receptacle must be installed by a licensed electrician only.

For the installation position of the receptacle refer to diagram in "Electrical Location".

Grounding Instruction

This appliance must be grounded. In the event of a malfunction or breakdown, grounding will reduce the risk of electric shock by providing a path of least resistance for the electric current.

Additional Grounding Procedure

Some local regulations may require a separate ground. In such cases, the required accessory ground wire, clamp and screw must be purchased separately. Never ground the appliance to plastic plumbing lines, gas lines or water pipes.

A 4-conductor cord shall be used when the appliance is installed in an area where local codes do not permit grounding through the neutral. Power supply cord must be replaced by a licensed electrician only.

Warning

Improper connection of the equipment grounding conductor may result in electric shock. Have the appliance checked by a qualified electrician or service technician if you are in doubt as to whether the appliance has been properly grounded.

Electrical Location

Connect the appliance to an outlet that is near the appliance. The outlet must be freely accessible following installation of the appliance.

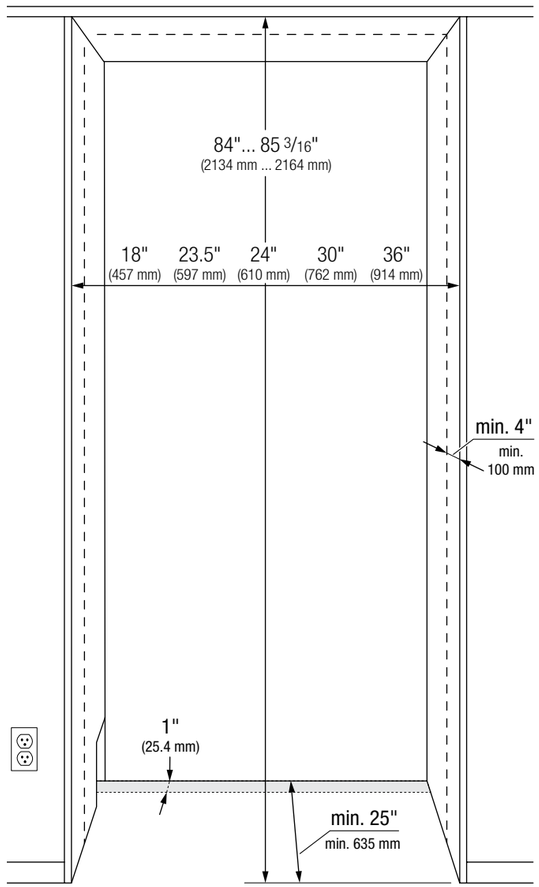

Water Location

A cold water connection is required for appliances that feature an ice maker or an ice and water dispenser.

The water pressure must be between 40 and 120 p.s.i. (2.75–8.25 bar). The installation must comply with local plumbing regulations.

A separate shut-off valve must be installed for the appliance water connection.

The shut-off valve for the water connection may not be behind the appliance. It is recommended to place the shut-off valve outside the cutout next to the appliance or in another easily accessible location. When installing the water connection, observe the permitted installation areas for the water supply line. The supply line can be located to the right (a), to the left (b), or underneath (c).

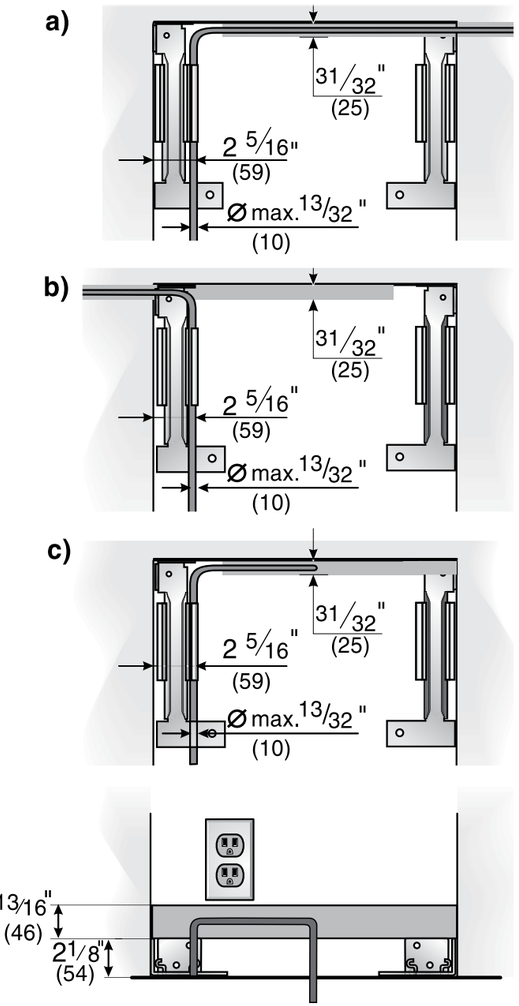

Cabinetry Terms & Basic Requirements

To clarify the terms that are used in this design guide, please refer to the following definitions:

Case
This is the main body of a kitchen cabinet.

(Cabinet) Face Frame
This is a decorative frame at the front of a kitchen cabinet representing the space between cabinetry doors or drawers and is typical for North America. European style cabinets (frameless cabinetry) typically do not have a face frame.

Door Panel
Able to be fully flush integrated when installed in 25" (635 mm) deep cabinets, Freedom® Collection refrigerators are intentionally designed to be equipped with custom door panels that perfectly match surrounding kitchen cabinetry. Typical panel thickness is 3/4" (19 mm). However, thicker panels can be accommodated to emulate the look of the visible face frame (as in overlay) or to match existing kitchen cabinetry doors. When using custom panels, always ensure that the panel reverse is finished to match the exterior, as parts of the panel reverse will be visible when the refrigerator door is opened.

Cutout (Niche)
The cutout is the cavity in which a Freedom® Collection appliance is installed. The width of the cutout (18-inch, 23.5-inch, 24-inch, 30-inch or 36-inch) is dependent on the appliance(s). The total depth of the cutout is equal to the depth of the case plus face frame. It does not necessarily include the thickness of the door panel. For proper planning of cutout depth, please refer to pages 194–197.

Typically, the cutout for a Freedom® Collection appliance will be 25" (635 mm) deep. When planning the cutout, it is essential that the top and side interior walls be flush to the appliance at a minimum depth of 4" (102 mm) from the outer edge of the face frame and composed of thick (5/8" (16 mm) minimum) material for secure installation. Also, because the case interior will be partially visible when the refrigerator door is opened, always ensure that the top and side returns are finished to match the exterior furniture at the same minimum depth of 4" (102 mm).

Kitchen Cabinetry Illustration

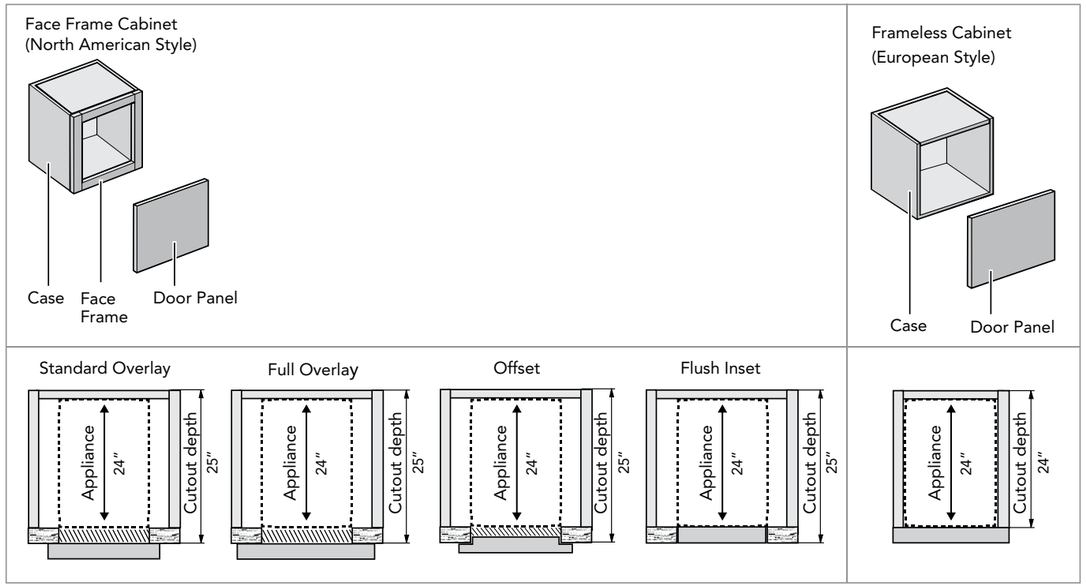

CABINETRY PLANNING INFORMATION
Freedom® Collection

Cabinetry Style & Cutout Depth

Freedom® Collection refrigeration appliances are designed to accommodate nearly any type of kitchen cabinetry door installation. Generally, when using standard ¾" (19 mm) panels, 25" (635 mm) deep cutouts are recommended but the required cutout depth depends on the desired cabinetry and custom panel execution, whether typical North American styles that employ a face frame—requiring a depth of 25" (635 mm)—or European style—requiring a depth of 24" (610 mm).

The below cabinetry styles detail requirements for the cutout and custom panel.

A) Standard (Partial) Overlay – 25" (635 mm) Cutout Depth
With standard overlay kitchen cabinetry the face frame is an important design element. In order to emulate this aesthetic for the refrigerator, one must account for the door panel thickness (typically 3/4" (19 mm)) as well as the face frame thickness (here, also 3/4" (19 mm)). The resulting thickness of the custom door panel is therefore 3/4" (19 mm) + 3/4" (19 mm) = 1 1/2" (38 mm). The cumulative thickness of the custom door panel requires added depth in the cutout so 25" (635 mm) is recommended (see sketch).

B) Full Overlay – 25" (635 mm) Cutout Depth
The requirements for standard overlays are also valid for full overlay designs so 25" (635 mm) cutout depth is recommended. However, especially if kitchen cabinet doors are thinner than 3/4" (19 mm) or reveals are 1/8" (3 mm) or smaller, a 24" (610 mm) cutout depth may also be acceptable. In this execution both the cabinet door and the small reveal of the fully overlaid face frame must be emulated within the typical appliance door panel thickness of 3/4" (19 mm). This can be done either a) by simply ignoring the visible area of the face frame (very small reveals show virtually no face frame) or b) by creating a "nose" on the custom door panel to emulate a small visible face frame (see sketch).

C & D) Offset & Flush Inset – 25" (635 mm) Cutout Depth
Here, kitchen cabinetry door panels do not rest atop the cabinet face frame (overlay), but are instead inserted partially (offset) or fully flush (inset) into the face frame. Such offset or flush inset door panels require additional depth in the cutout. Using the example of a 3/4" (19 mm) thick panel, the complete cutout depth would be 24" (610 mm) + 3/4" (19 mm) = 24 3/4" (629 mm) and in this example 25" (635 mm) is recommended.

E) Framed – 24" (610 mm) Cutout Depth
For Freedom® Collection refrigeration appliances, a metal frame (FRAMEKIT10) may be affixed to the side of the cabinet which conveniently hides unfinished case returns and provides a classic built-in look. This is particularly relevant for existing cabinetry that has not been custom-built to accommodate these appliances. A 24" (610 mm) cutout will result in a slightly protruding door panel for a typical built-in look.

F) European Style Kitchen Cabinetry – 24" (610 mm) Cutout Depth
If the kitchen design is based on European style cabinetry, there is no need to emulate the look of a face frame, as such a frame is not an element of the kitchen cabinetry design. Therefore a 24" (610 mm) deep cutout with accompanying custom panel will always be sufficient.

A) Standard Overlay Design

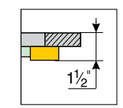

Custom Door Panel
(Emulating a Face Frame)

B) Full Overlay Design

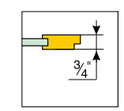

Custom Door Panel with Nose
(Emulating a Face Frame)

Important

It is strongly recommended the top interior of the cutout be of solid material (5/8" (16 mm) thickness). Ensure that the top well is completely flush for a depth of at least 4" (102 mm).

Ensure that the side walls of the cutout are also completely flush to a depth of at least 4" (102 mm).

If, for some reason, a separate cutout cabinet is created, ensure that the furniture return is at least 4" (102 mm) deep for proper installation.

Planning Example #1: Frameless (European) Cabinetry

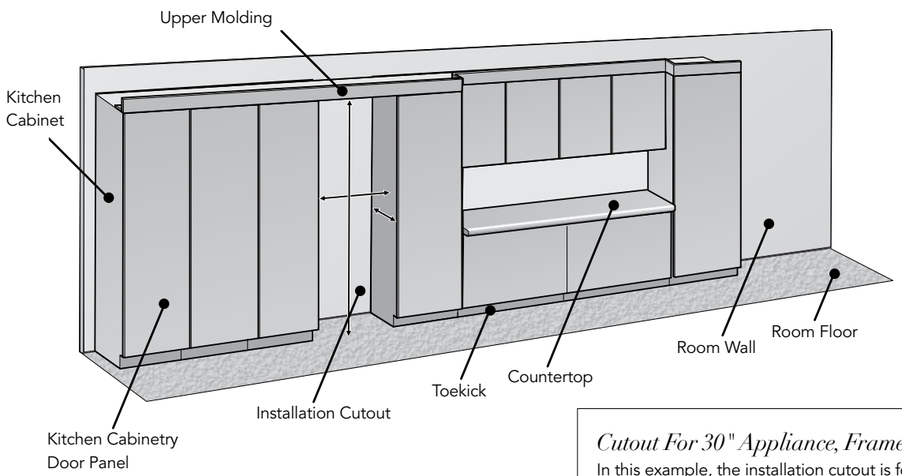

Cutout For 30" Appliance, Frameless Cabinetry:

In this example, the installation cutout is formed by simply leaving a gap between two kitchen cabinets.

The custom door panel 3/4" (19 mm) will be identical in appearance and thickness to the surrounding kitchen cabinetry panels.

- cutout width is exactly 30" (762 mm)
- cutout (case) depth is 24" (610 mm)—does not include door panel
- top and side walls of cutout interior are completely flush, of solid material and at least 4" (102 mm) deep

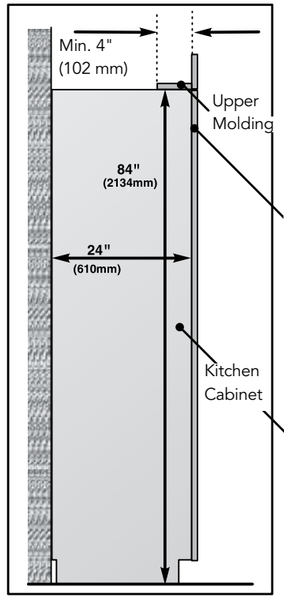

Installation Cutout (Vertical Section)

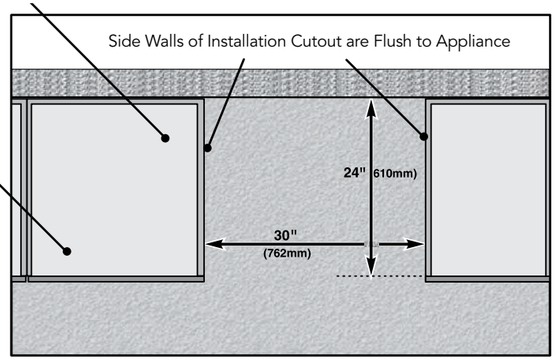

30-Inch Installation Cutout (Horizontal Section)

Planning Example #2: Standard Overlay Cabinetry

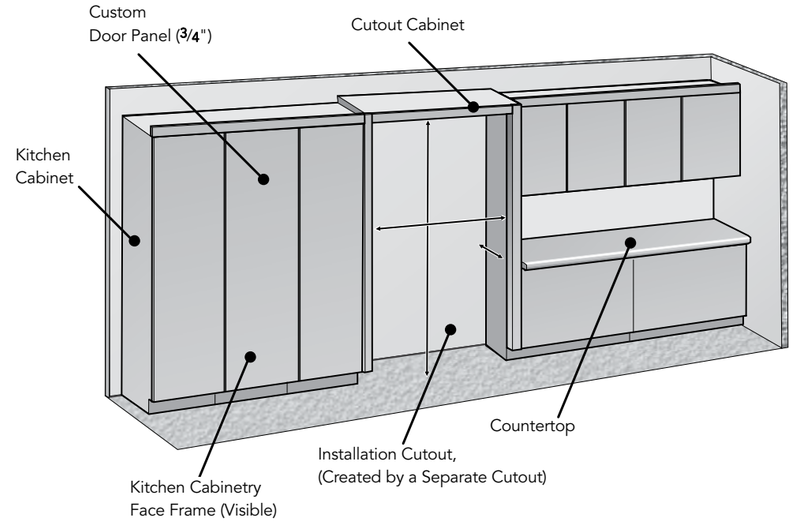

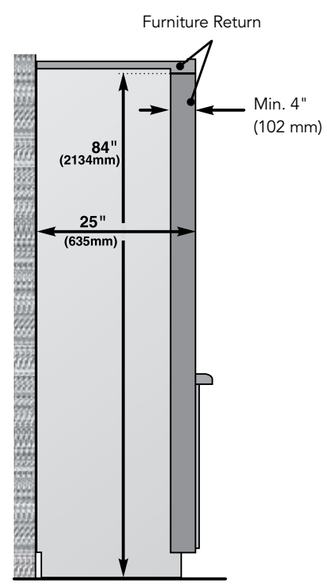

Cutout For 42" Side-By-Side Appliance Combination, Standard Overlay Cabinetry:

In this example, the installation cutout is formed by creating a separate cutout around the appliances. It yields a look that deviates from the general kitchen design.

The custom door panel has a cumulative thickness of 1 1/2" (38 mm), 3/4" (19 mm) emulating the face frame and 3/4" (19 mm) for the actual door panel). Thus, a 25" (635 mm) deep installation cutout is required.

- cutout width is exactly 42" (for an 18" + 24" = 42" side-by-side combination)
- cutout (case) depth is 25" (635 mm) due to 1 1/2" (38 mm) custom door panel
- any furniture return must be at least 4" (102 mm) deep, on interior top and sides, of solid material and should be finished to match the exterior at the same depth (4" or 102 mm)

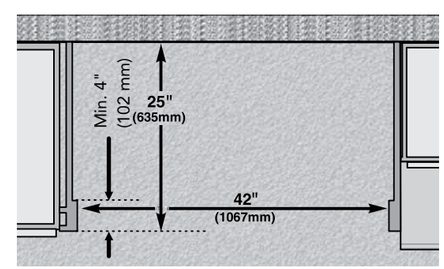

Toekick & Venting Grille

Each Freedom® Collection refrigeration appliance comes with a 4" (102 mm) tall stainless steel toekick. A custom-made toekick that matches the surrounding cabinetry may be applied instead. While standard toekick height is 4" (102 mm), depending on the usage of the leveling legs, the toekick height could vary. Regardless of toekick height, it is imperative that the venting grille remain unblocked to ensure proper functionality of the appliance. Decorative toekicks should be removable to allow for servicing.

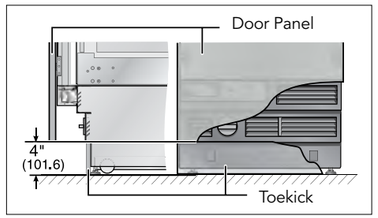

Typical 4" (102 mm) toekick height. Velcro adhesive strips are used to fasten the toekick to the appliance. Venting grille and (if applicable) the water filter cavity are located above the toekick area.

Upper Molding

The planning of decorative upper molding above the cutout requires taking into account the actual or desired height of the door panel.

The overall height of the door panel will depend on:

- the height of the appliance, typically 84" (2134 mm)—leveling legs allow height adjustment ranging from -1/2" (-13 mm) to +1 3/8" (+35 mm)
- the installed height of the door panel (distance from the bottom edge of the door panel to the floor, typically 4" (102 mm), and, if desired, any extension of the custom panel above the appliance cutout)
- the appliance type (single door or bottom freezer)

Important

Please recall that a panel should be installed at a minimum height of 4" (102 mm) from the floor to allow proper ventilation of the appliance.

Always ensure that the top of the cutout or upper decorative molding is at least 4" (102 mm) deep, so that the refrigerator can be properly secured to the cutout wall. This is particularly important if a protruding cutout is specially created and configured with a face frame. Furniture returns for any face frame must be a minimum of 4" (102 mm) deep.

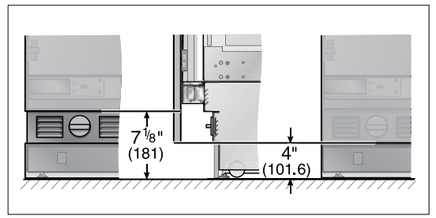

If required by the surrounding cabinetry design, the distance between the bottom edge of the door panel and the floor can be increased from approx. 4" (102 mm) up to 7 1/8" (181 mm), but should not be decreased. Note, however, that the venting grille and (if applicable) water filter cavity will be visible, even if the door is closed.

Vertical Section, Side View:

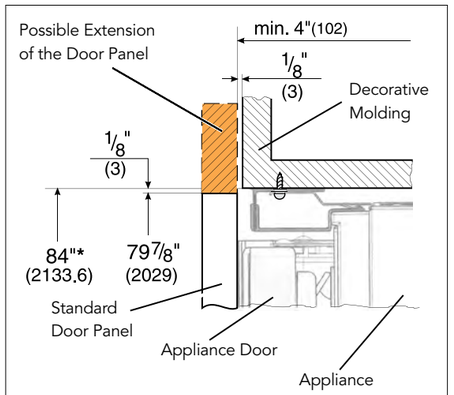

*Adjustment in leveling legs: -1/2" (-13 mm) to 1 3/8" (35 mm)

Door Swivel Range

It is absolutely essential to ensure that the appliance is installed in such a way that the doors (including handles) and adjacent cabinets, countertops, pilasters, walls or other kitchen elements do not interfere with one another when opened. The illustrations below depict the swivel range of the Freedom® Collection refrigerator doors including mounted door panels of both 3/4" (19 mm) and 1 1/2" (38 mm) thickness. In the event of door interference the following solutions may be employed:

- Limit the refrigerator door opening angle to 90° with a door stop pin inserted into the hinge.
- Reduce the door panel thickness (if larger than 3/4" (19 mm)).
- Install a spacer between the appliance and the kitchen element that creates the interference.
- Rearrange the opposing kitchen element that creates the problem.
- Create a protruding cutout for the appliance.

Door Swivel Range – 3/4" (19 mm) Flush Appliance Door Panel

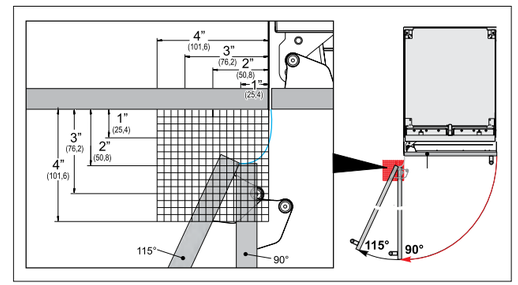

Door Swivel Range – 1 1/2" (38 mm) Flush Appliance Door Panel

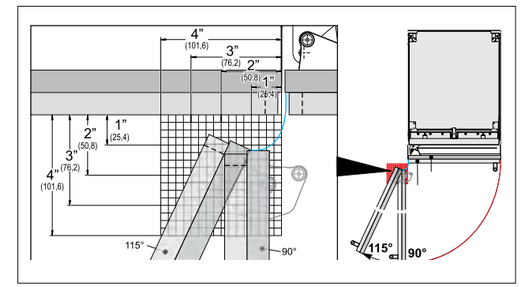

Handle Installation and Dimensions

Professional Handle

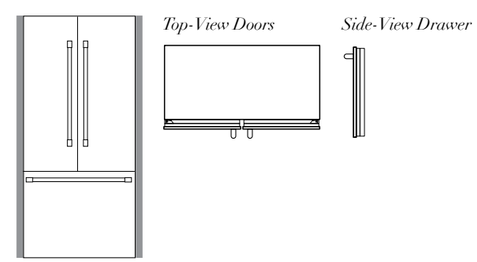

Masterpiece® Handle

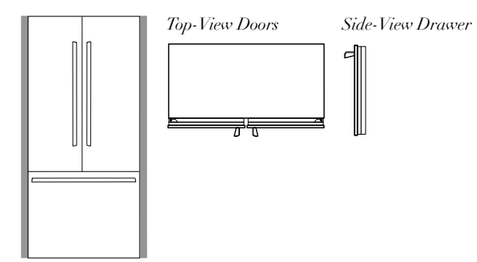

Professional

PR36HNDL20

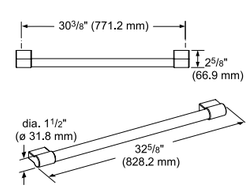

PR30HNDL20*

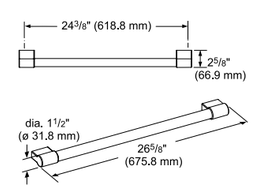

*For use with 30" bottom freezer T30IB905SP drawer only

Masterpiece®

MS36HNDL20

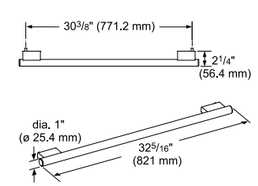

MS30HNDL20*

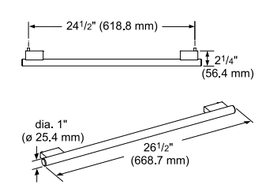

23.5-Inch Built-In Fresh Food Column – T23IR905SP

Cutout Dimensions

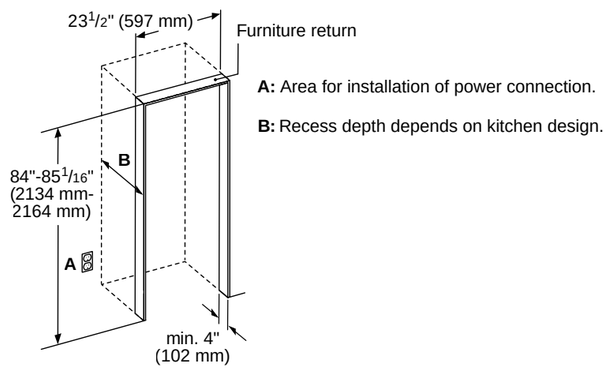

Top View Clearance

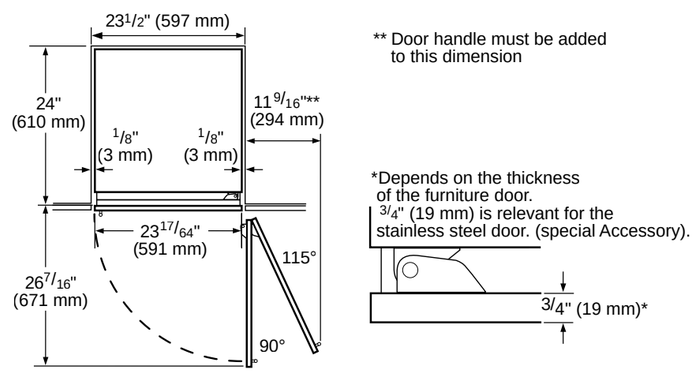

Panel Dimensions

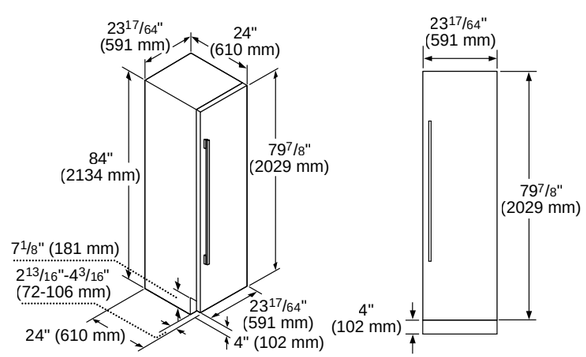

24-Inch Built-In Fresh Food Column – T24IR905SP

Cutout Dimensions

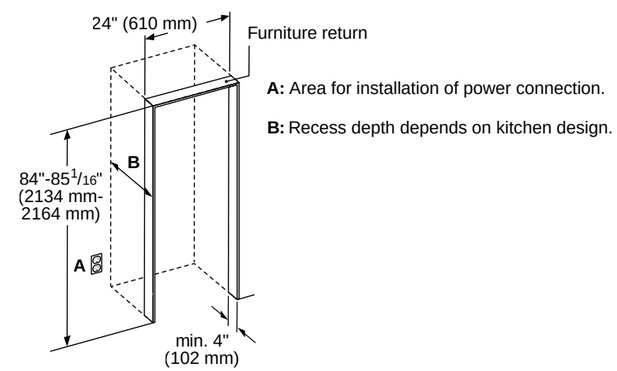

Top View Clearance

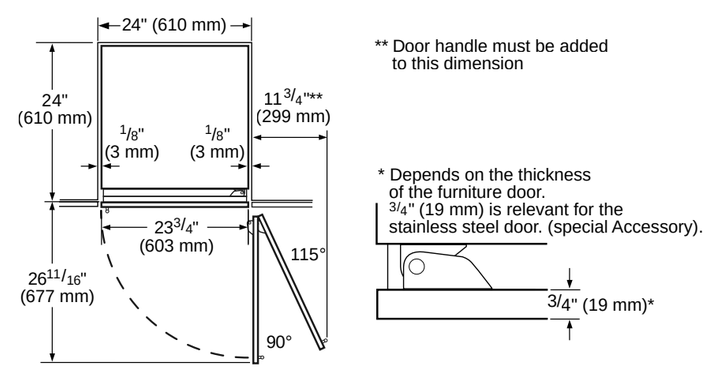

Panel Dimensions

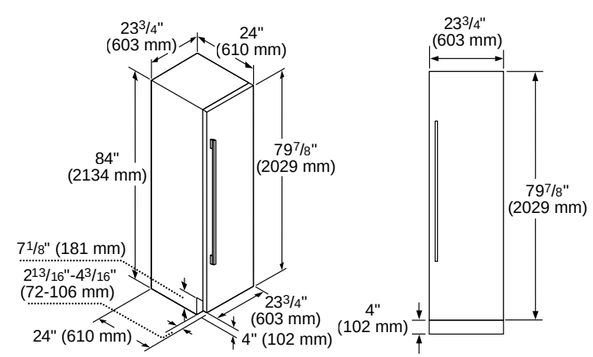

Visit Thermador.com for complete specifications or text a Thermador model number to 21432 to have specs sent to your phone

INSTALLATION

Freedom® Collection

30-Inch Built-In Fresh Food Columns – T30IR905SP

Cutout Dimensions

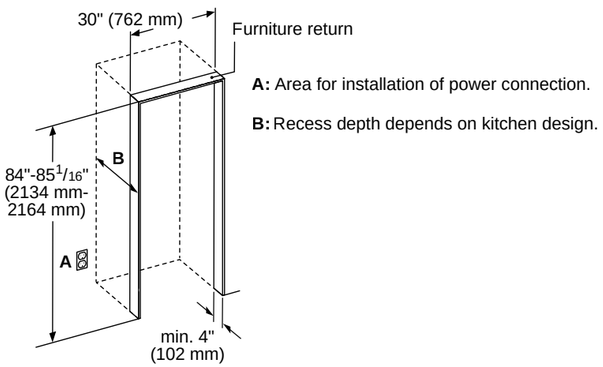

Top View Clearance

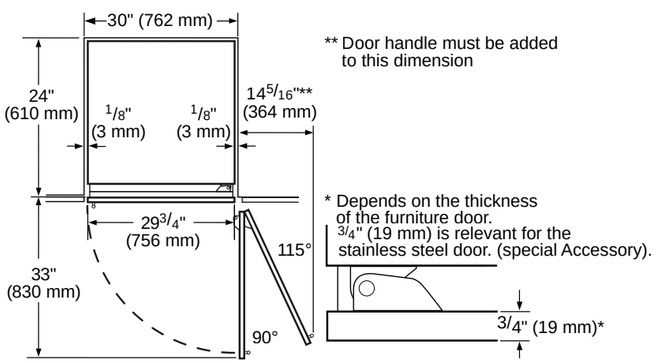

Panel Dimensions

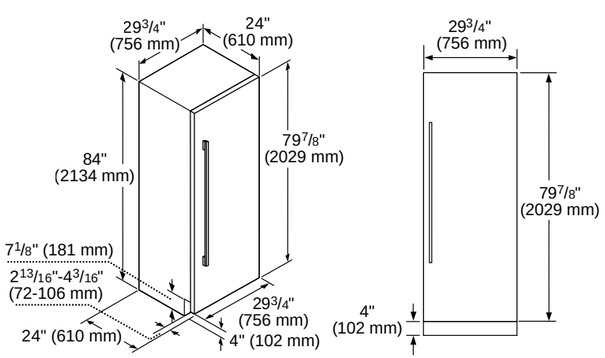

Visit Thermador.com for complete specifications or text a Thermador model number to 21432 to have specs sent to your phone

INSTALLATION

Freedom® Collection

36-Inch Built-In Fresh Food Column – T36IR905SP

Cutout Dimensions

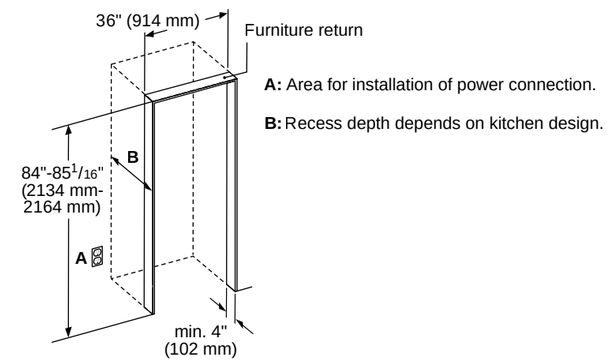

Top View Clearance

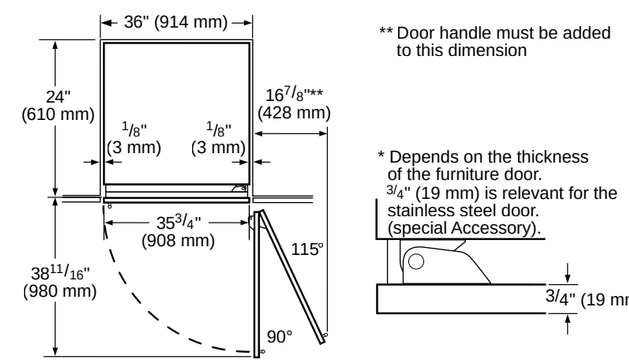

Panel Dimensions

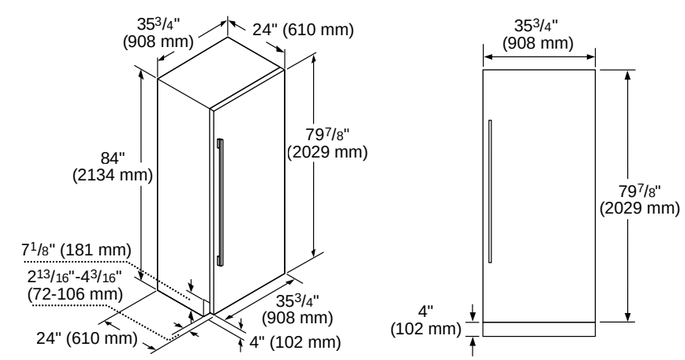

Visit Thermador.com for complete specifications or text a Thermador model number to 21432 to have specs sent to your phone

18-Inch Built-In Freezer Columns With Ice & Water Dispenser – T18ID905RP / T18ID905LP

Cutout Dimensions

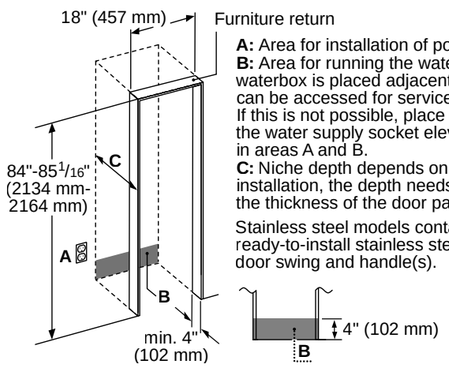

A: Area for installation of power connection.
B: Area for running the water line. It is recommended that the waterbox is placed adjacent to the installation cavity, so that it can be accessed for service without uninstalling the appliance. If this is not possible, place the recessed waterbox adjacent to the water supply socket elevated at the heights as referenced in areas A and B.
C: Niche depth depends on kitchen design. For a flush installation, the depth needs to be at least 24 inches plus the thickness of the door panel.

Stainless steel models contain a panel-ready base unit, ready-to-install stainless steel door(s) with a right or left door swing and handle(s).

Panel Dimensions

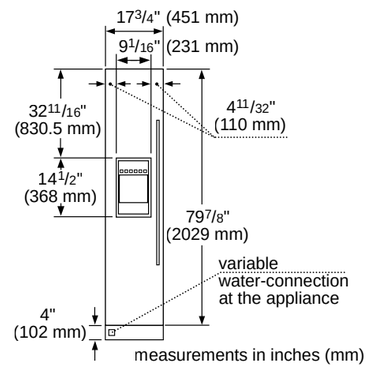

Top View Clearance

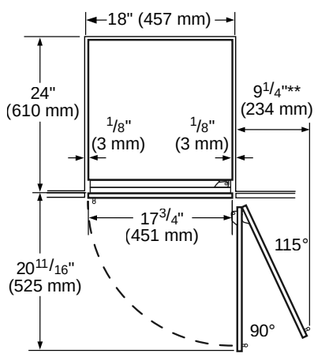

** Door handle must be added to this dimension

* Depends on the thickness of the furniture door. 3/4" (19 mm) is relevant for the stainless steel door. (special Accessory).

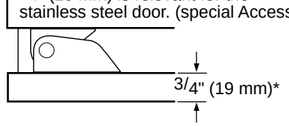

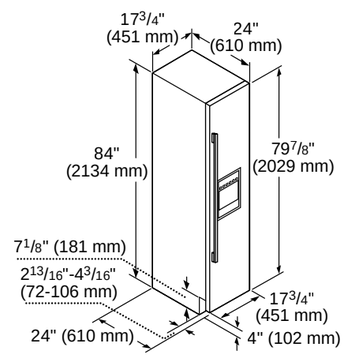

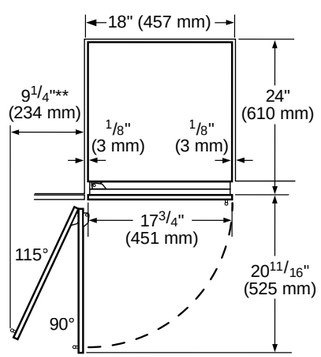

** Door handle must be added to this dimension

* Depends on the thickness of the furniture door. 3/4" (19 mm) is relevant for the stainless steel door. (special Accessory).

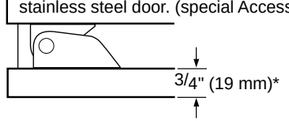

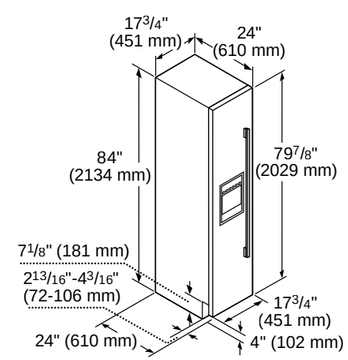

24-Inch Built-In Freezer Columns With Ice & Water Dispenser – T24ID905RP / T24ID905LP

Cutout Dimensions

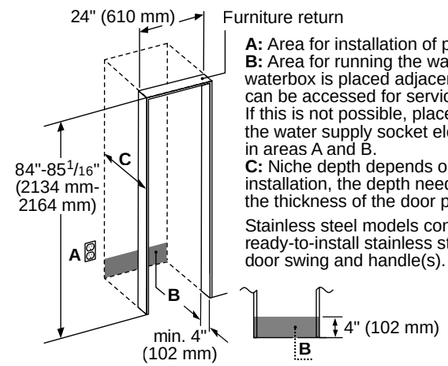

A: Area for installation of power connection.
B: Area for running the water line. It is recommended that the waterbox is placed adjacent to the installation cavity, so that it can be accessed for service without uninstalling the appliance. If this is not possible, place the recessed waterbox adjacent to the water supply socket elevated at the heights as referenced in areas A and B.
C: Niche depth depends on kitchen design. For a flush installation, the depth needs to be at least 24 inches plus the thickness of the door panel.

Stainless steel models contain a panel-ready base unit, ready-to-install stainless steel door(s) with a right or left door swing and handle(s).

Panel Dimensions

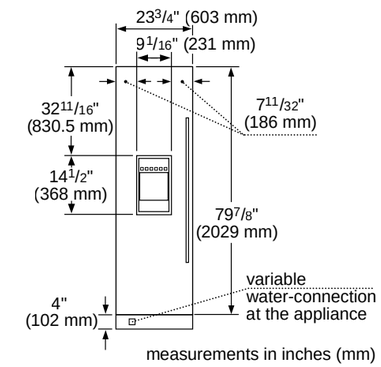

Top View Clearance

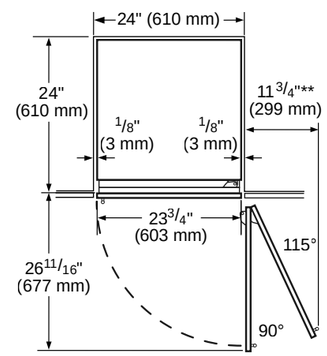

** Door handle must be added to this dimension

* Depends on the thickness of the furniture door. 3/4" (19 mm) is relevant for the stainless steel door. (special Accessory).

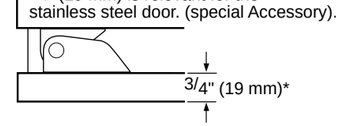

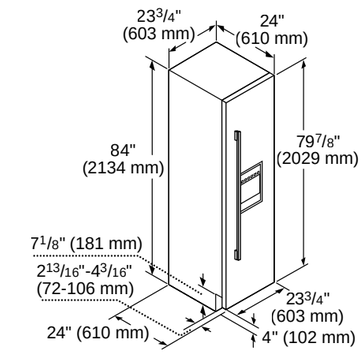

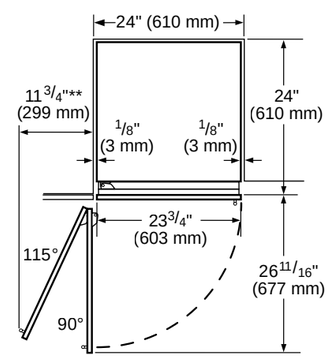

** Door handle must be added to this dimension

* Depends on the thickness of the furniture door. 3/4" (19 mm) is relevant for the stainless steel door. (special Accessory).

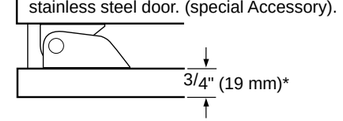

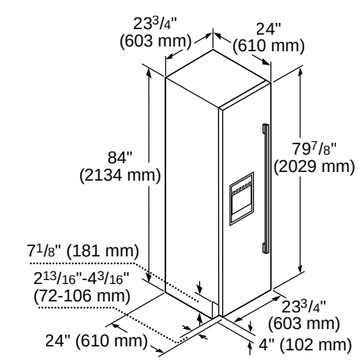

18-Inch Built-In Freezer Columns With Internal Ice Maker – T18IF905SP

Cutout Dimensions

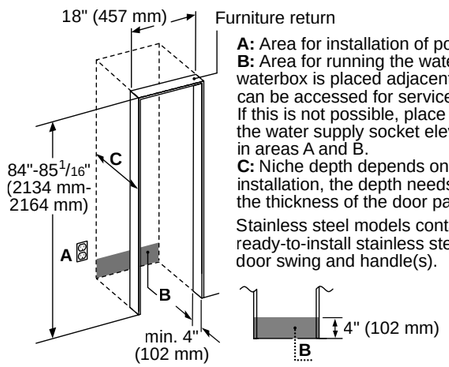

A: Area for installation of power connection.
B: Area for running the water line. It is recommended that the waterbox is placed adjacent to the installation cavity, so that it can be accessed for service without uninstalling the appliance. If this is not possible, place the recessed waterbox adjacent to the water supply socket elevated at the heights as referenced in areas A and B.
C: Niche depth depends on kitchen design. For a flush installation, the depth needs to be at least 24 inches plus the thickness of the door panel.

Stainless steel models contain a panel-ready base unit, ready-to-install stainless steel door(s) with a right or left door swing and handle(s).

Top View Clearance

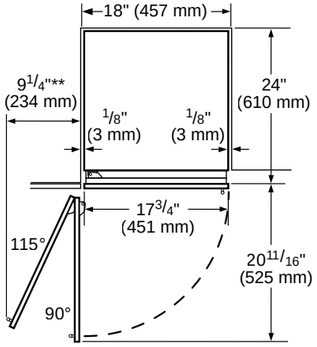

** Door handle must be added to this dimension

* Depends on the thickness of the furniture door. 3/4" (19 mm) is relevant for the stainless steel door. (special Accessory).

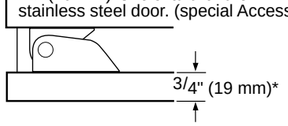

Panel Dimensions

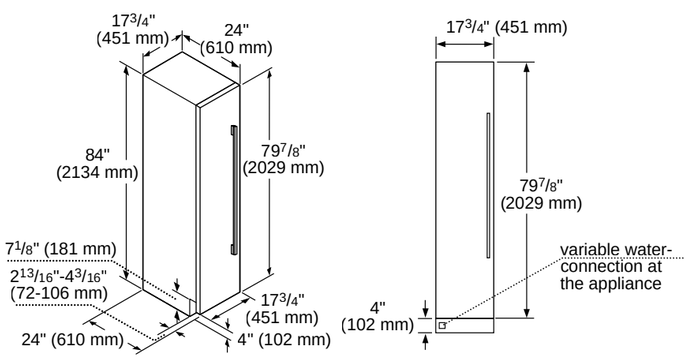

24-Inch Built-In Freezer Column With Internal Ice Maker – T24IF905SP

Cutout Dimensions

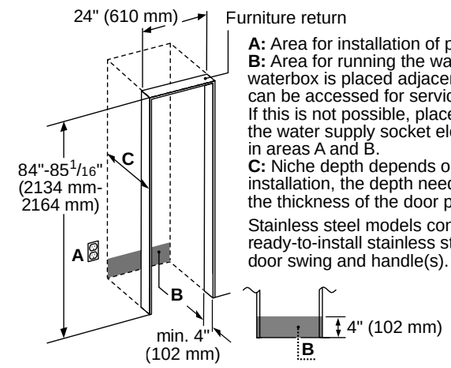

A: Area for installation of power connection.
B: Area for running the water line. It is recommended that the waterbox is placed adjacent to the installation cavity, so that it can be accessed for service without uninstalling the appliance. If this is not possible, place the recessed waterbox adjacent to the water supply socket elevated at the heights as referenced in areas A and B.
C: Niche depth depends on kitchen design. For a flush installation, the depth needs to be at least 24 inches plus the thickness of the door panel.

Stainless steel models contain a panel-ready base unit, ready-to-install stainless steel door(s) with a right or left door swing and handle(s).

Top View Clearance

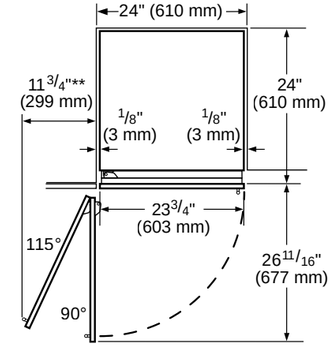

** Door handle must be added to this dimension

* Depends on the thickness of the furniture door. 3/4" (19 mm) is relevant for the stainless steel door. (special Accessory).

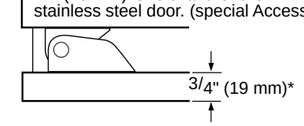

Panel Dimensions

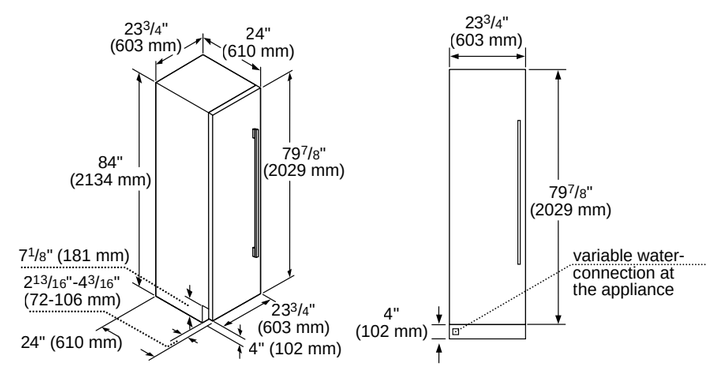

INSTALLATION

Freedom® Collection

30-Inch Built-In Freezer Column With Internal Ice Maker – T30IF905SP

Cutout Dimensions

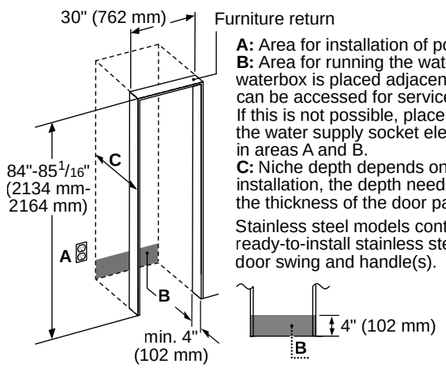

A: Area for installation of power connection.
B: Area for running the water line. It is recommended that the waterbox is placed adjacent to the installation cavity, so that it can be accessed for service without uninstalling the appliance. If this is not possible, place the recessed waterbox adjacent to the water supply socket elevated at the heights as referenced in areas A and B.
C: Niche depth depends on kitchen design. For a flush installation, the depth needs to be at least 24 inches plus the thickness of the door panel.

Stainless steel models contain a panel-ready base unit, ready-to-install stainless steel door(s) with a right or left door swing and handle(s).

Top View Clearance

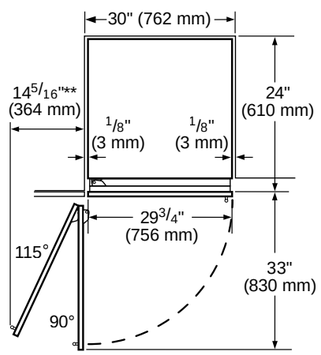

** Door handle must be added to this dimension

* Depends on the thickness of the unit door. 3/4" (19 mm) refers to the stainless steel door. (special accessory).

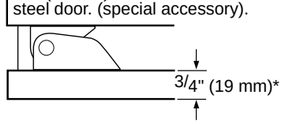

Panel Dimensions

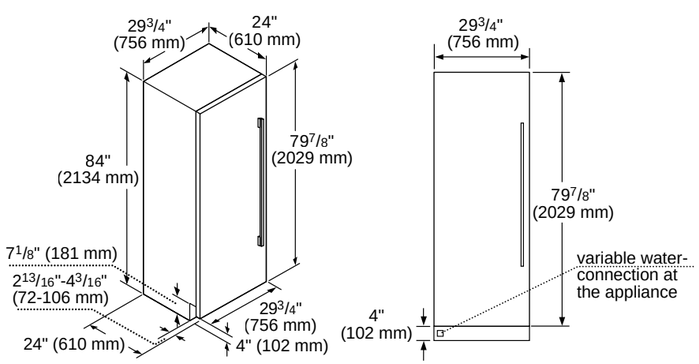

Visit Thermador.com for complete specifications or text a Thermador model number to 21432 to have specs sent to your phone

INSTALLATION

Freedom® Collection

36-Inch Built-In Freezer Column With Internal Ice Maker – T36IF905SP

Cutout Dimensions

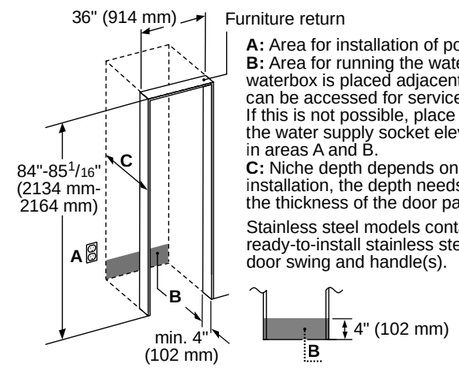

A: Area for installation of power connection.
B: Area for running the water line. It is recommended that the waterbox is placed adjacent to the installation cavity, so that it can be accessed for service without uninstalling the appliance. If this is not possible, place the recessed waterbox adjacent to the water supply socket elevated at the heights as referenced in areas A and B.
C: Niche depth depends on kitchen design. For a flush installation, the depth needs to be at least 24 inches plus the thickness of the door panel.

Stainless steel models contain a panel-ready base unit, ready-to-install stainless steel door(s) with a right or left door swing and handle(s).

Top View Clearance

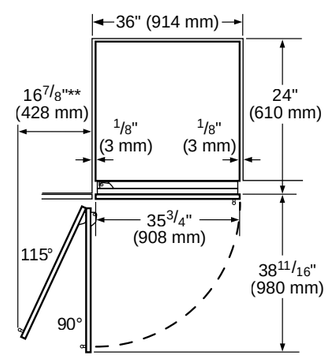

** Door handle must be added to this dimension

* Depends on the thickness of the furniture door. 3/4" (19 mm) is relevant for the stainless steel door. (special Accessory).

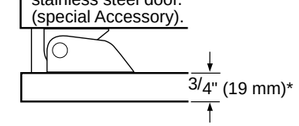

Panel Dimensions

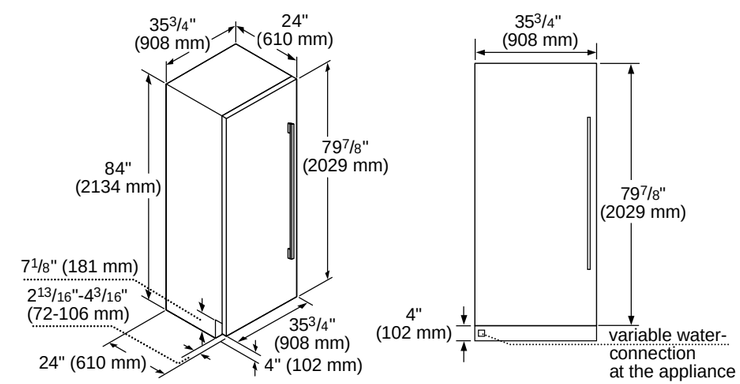

Visit Thermador.com for complete specifications or text a Thermador model number to 21432 to have specs sent to your phone

INSTALLATION

Freedom® Collection

18-Inch Built-In Wine Preservation Columns – T18IW905SP

Cutout Dimensions

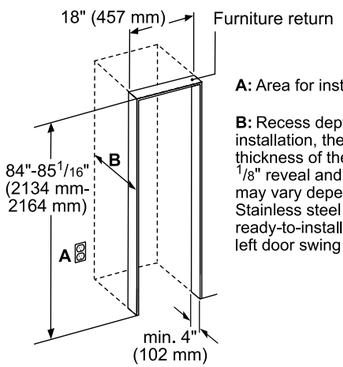

A: Area for installation of power connection.

B: Recess depth depends on kitchen design. For a flush installation, the depth needs to be at least 24 inches plus the thickness of the door panel. Panel dimensions based on a standard 1/8" reveal and 4 inch toe kick. Custom panel dimensions may vary depending on kitchen reveals and toe kick. Stainless steel models contain a panel-ready base unit, ready-to-install stainless steel door(s) with a right or left door swing and handle(s).

Top View Clearance

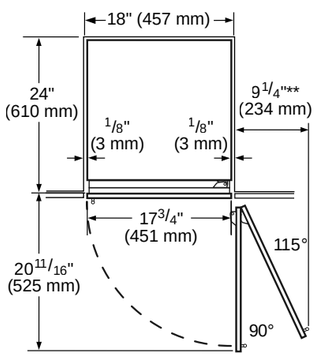

** Door handle must be added to this dimension

* Depends on the thickness of the furniture door. 3/4" (19 mm) is relevant for the stainless steel door. (special Accessory).

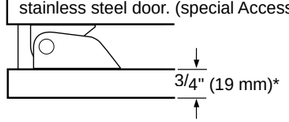

Panel Dimensions

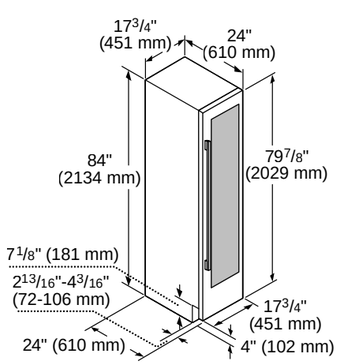

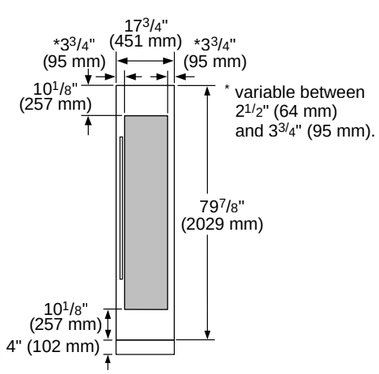

INSTALLATION

Freedom® Collection

24-Inch Built-In Wine Preservation Columns – T24IW905SP

Cutout Dimensions

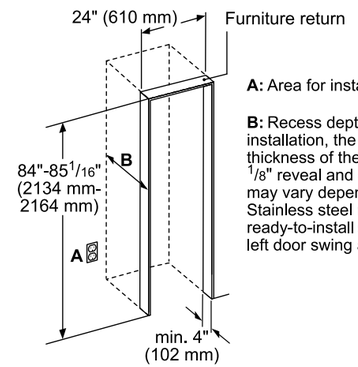

A: Area for installation of power connection.

B: Recess depth depends on kitchen design. For a flush installation, the depth needs to be at least 24 inches plus the thickness of the door panel. Panel dimensions based on a standard 1/8" reveal and 4 inch toe kick. Custom panel dimensions may vary depending on kitchen reveals and toe kick. Stainless steel models contain a panel-ready base unit, ready-to-install stainless steel door(s) with a right or left door swing and handle(s).

Top View Clearance

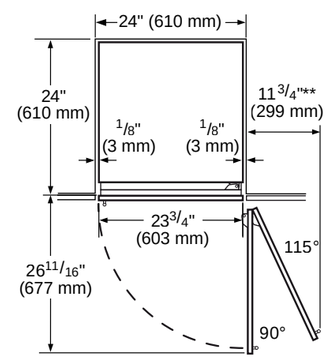

** Door handle must be added to this dimension

* Depends on the thickness of the furniture door. 3/4" (19 mm) is relevant for the stainless steel door. (special Accessory).

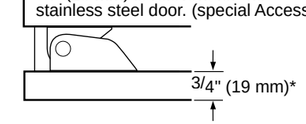

Panel Dimensions

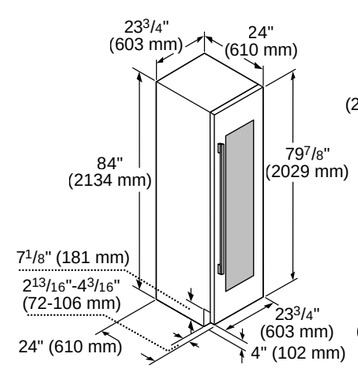

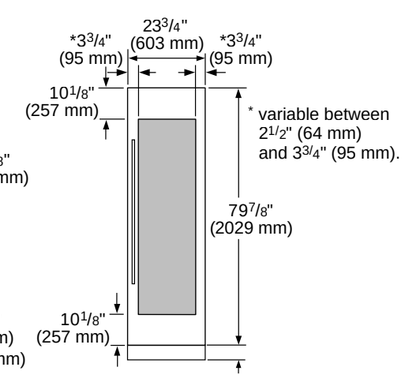

30-Inch Built-In 2-Door Bottom Freezer – T30IB905SP

Cutout Dimensions

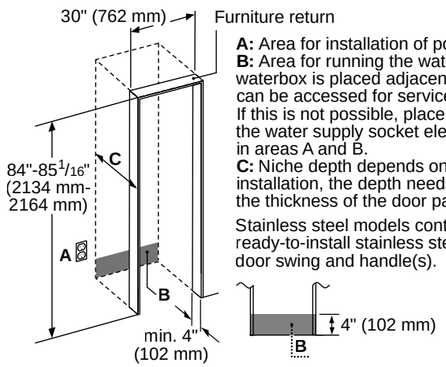

A: Area for installation of power connection.
B: Area for running the water line. It is recommended that the waterbox is placed adjacent to the installation cavity, so that it can be accessed for service without uninstalling the appliance. If this is not possible, place the recessed waterbox adjacent to the water supply socket elevated at the heights as referenced in areas A and B.
C: Niche depth depends on kitchen design. For a flush installation, the depth needs to be at least 24 inches plus the thickness of the door panel.

Stainless steel models contain a panel-ready base unit, ready-to-install stainless steel door(s) with a right or left door swing and handle(s).

Top View Clearance

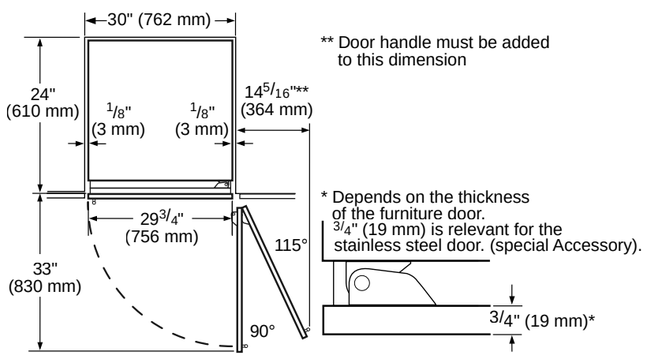

Panel Dimensions

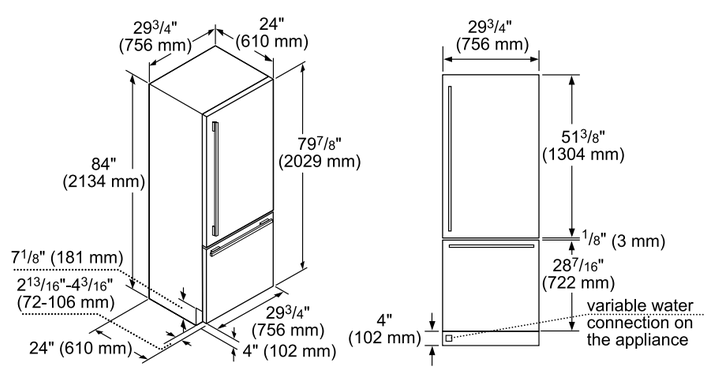

INSTALLATION
Freedom® Collection

36-Inch Built-In 2-Door Bottom Freezer – T36IB905SP

Cutout Dimensions

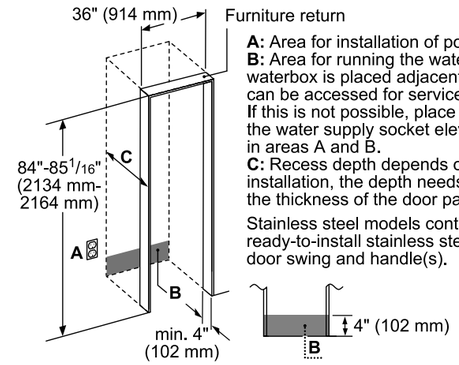

A: Area for installation of power connection.
B: Area for running the water line. It is recommended that the waterbox is placed adjacent to the installation cavity, so that it can be accessed for service without uninstalling the appliance. If this is not possible, place the recessed waterbox adjacent to the water supply socket elevated at the heights as referenced in areas A and B.
C: Recess depth depends on kitchen design.For a flush installation, the depth needs to be at least 24 inches plus the thickness of the door panel.

Stainless steel models contain a panel-ready base unit, ready-to-install stainless steel door(s) with a right or left door swing and handle(s).

Top View Clearance

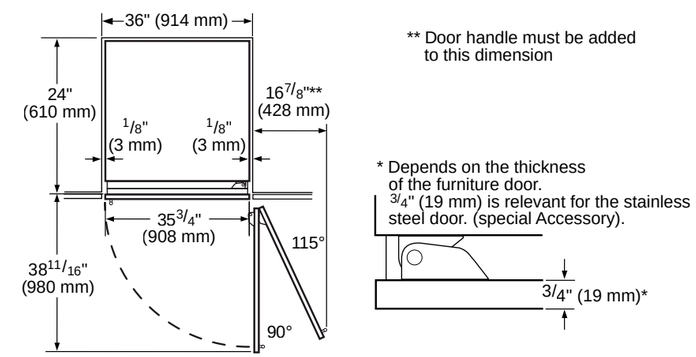

Panel Dimensions

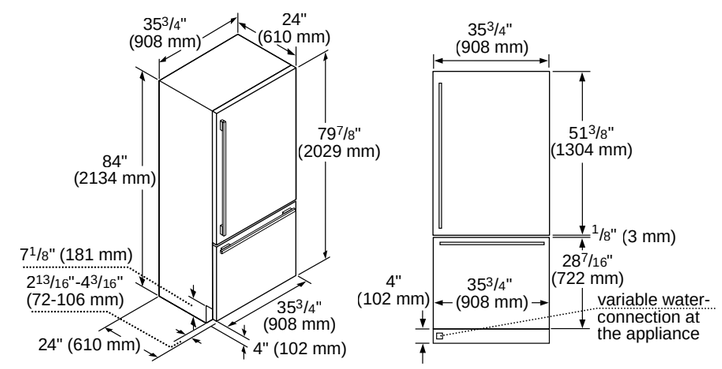

INSTALLATION

Freedom® Collection

36-Inch Built-In French Door Bottom Freezers – T36IT905NP / T36IT903NP

Cutout Dimensions

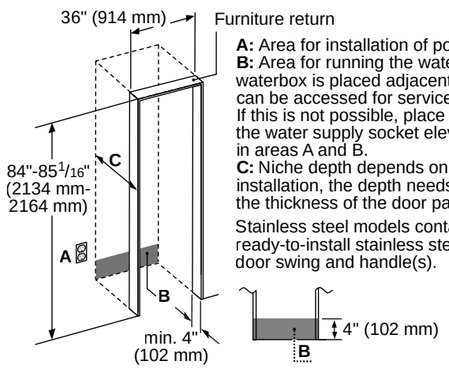

A: Area for installation of power connection.
B: Area for running the water line. It is recommended that the waterbox is placed adjacent to the installation cavity, so that it can be accessed for service without uninstalling the appliance. If this is not possible, place the recessed waterbox adjacent to the water supply socket elevated at the heights as referenced in areas A and B.
C: Niche depth depends on kitchen design. For a flush installation, the depth needs to be at least 24 inches plus the thickness of the door panel.

Stainless steel models contain a panel-ready base unit, ready-to-install stainless steel door(s) with a right or left door swing and handle(s).

Top View Clearance

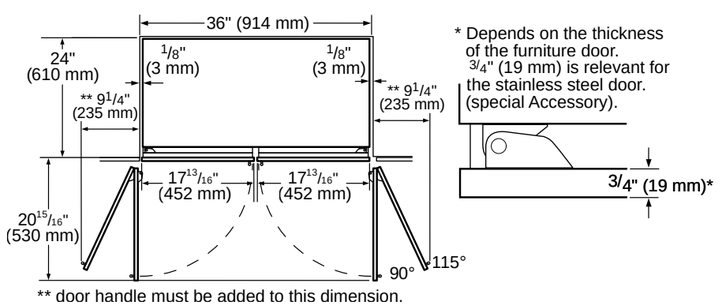

** door handle must be added to this dimension.

Panel Dimensions

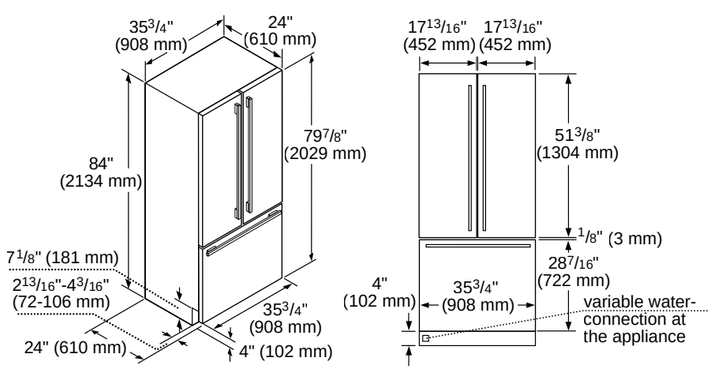

Visit Thermador.com for complete specifications or text a Thermador model number to 21432 to have specs sent to your phone

INSTALLATION

Freedom® Collection

30-Inch Pre-Assembled Built-In 2-Door Bottom Freezers – T30BB925SS / T30BB915SS

Cutout Dimensions

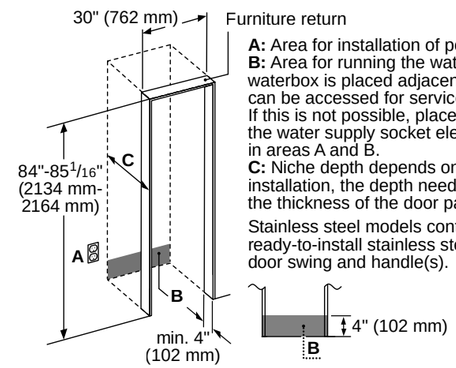

A: Area for installation of power connection.
B: Area for running the water line. It is recommended that the waterbox is placed adjacent to the installation cavity, so that it can be accessed for service without uninstalling the appliance. If this is not possible, place the recessed waterbox adjacent to the water supply socket elevated at the heights as referenced in areas A and B.
C: Niche depth depends on kitchen design. For a flush installation, the depth needs to be at least 24 inches plus the thickness of the door panel.

Stainless steel models contain a panel-ready base unit, ready-to-install stainless steel door(s) with a right or left door swing and handle(s).

Top View Clearance

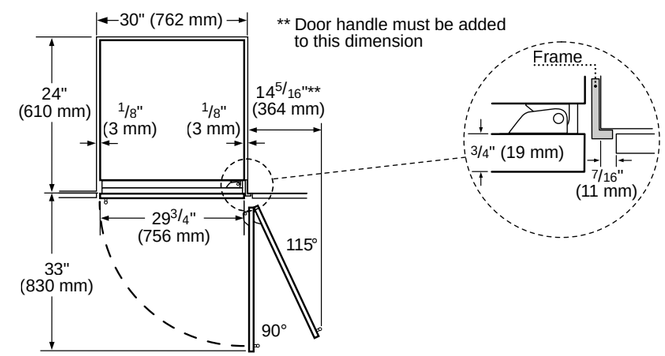

Panel Dimensions

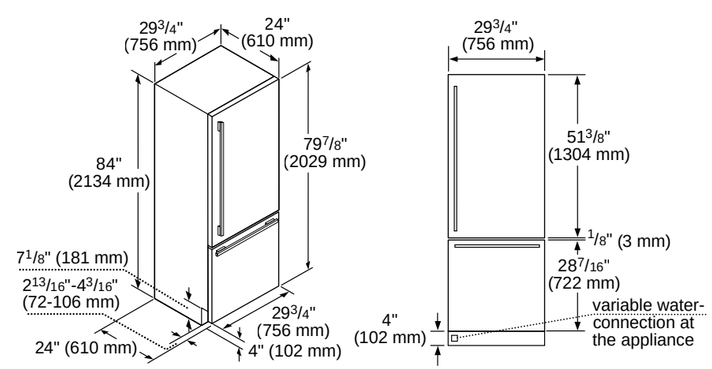

Visit Thermador.com for complete specifications or text a Thermador model number to 21432 to have specs sent to your phone

36-Inch Pre-Assembled Built-In 2-Door Bottom Freezers – T36BB925SS / T36BB915SS

Cutout Dimensions

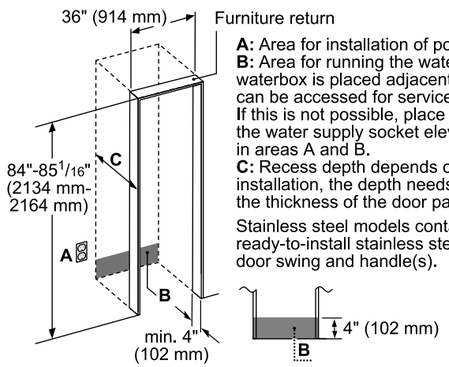

A: Area for installation of power connection.
B: Area for running the water line. It is recommended that the waterbox is placed adjacent to the installation cavity, so that it can be accessed for service without uninstalling the appliance. If this is not possible, place the recessed waterbox adjacent to the water supply socket elevated at the heights as referenced in areas A and B.
C: Recess depth depends on kitchen design.For a flush installation, the depth needs to be at least 24 inches plus the thickness of the door panel.

Stainless steel models contain a panel-ready base unit, ready-to-install stainless steel door(s) with a right or left door swing and handle(s).

Top View Clearance

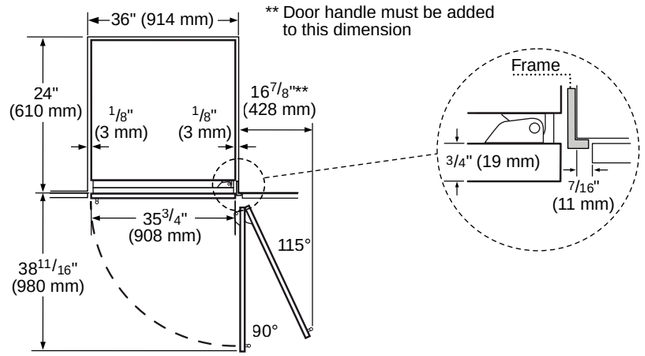

Panel Dimensions

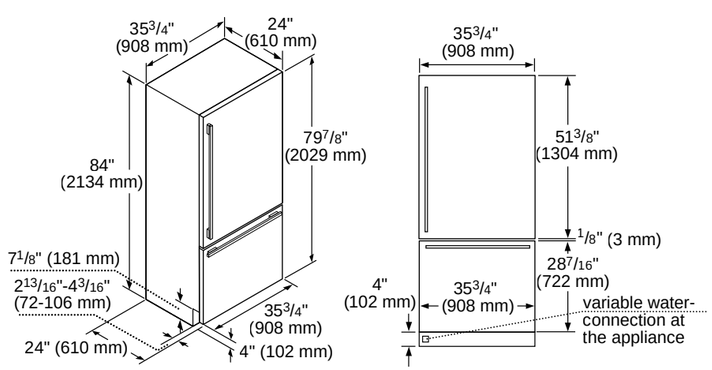

36-Inch Pre-Assembled Built-In French Door Bottom Freezers – T36BT925NS / T36BT915NS

Cutout Dimensions

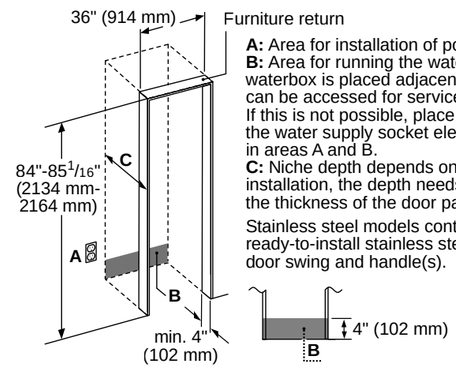

A: Area for installation of power connection.
B: Area for running the water line. It is recommended that the waterbox is placed adjacent to the installation cavity, so that it can be accessed for service without uninstalling the appliance. If this is not possible, place the recessed waterbox adjacent to the water supply socket elevated at the heights as referenced in areas A and B.
C: Niche depth depends on kitchen design. For a flush installation, the depth needs to be at least 24 inches plus the thickness of the door panel.

Stainless steel models contain a panel-ready base unit, ready-to-install stainless steel door(s) with a right or left door swing and handle(s).

Top View Clearance

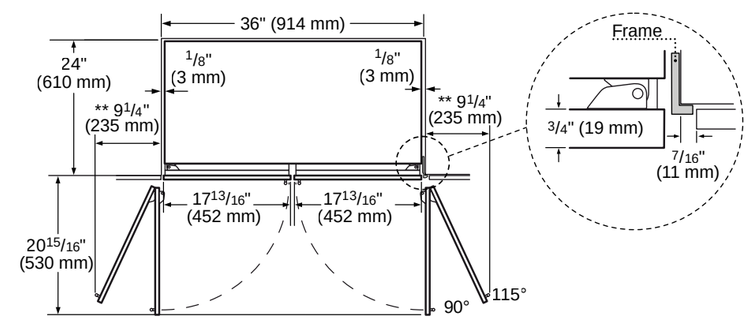

** door handle must be added to this dimension.

Panel Dimensions

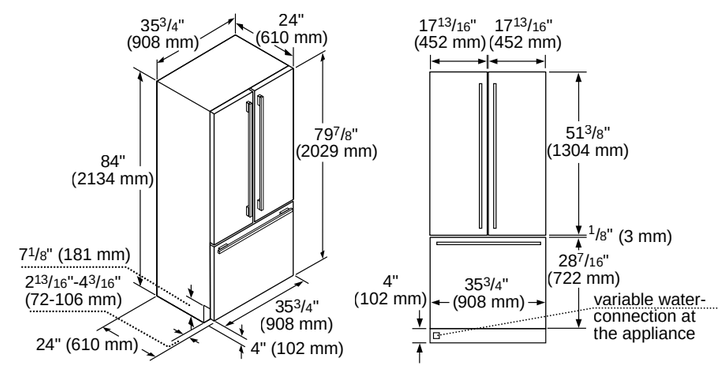

INSTALLATION

Freestanding French Door Bottom Freezers

36-Inch Stainless Steel Freestanding French Door Bottom Freezer with Professional Handles – T36FT820NS

Cutout Dimensions

measurements in inches (mm)

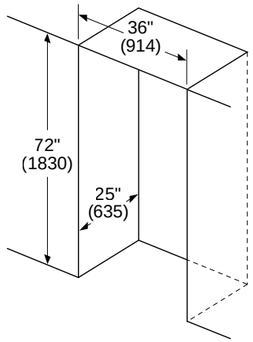

Leave ½" (12.7) gap at the top and 1" (25.4) behind the refrigerator for proper ventilation.

It is recommended that you do not install the refrigerator near a heat source such as a stove or a range.

Panel Dimensions

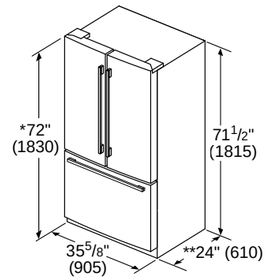

*Add 5/8" (17) with front leveling feet fully extended
** Add 1" (25) for fixed spacers on back

measurements in inches (mm)

Top View Clearance

Measurements in inches (mm)

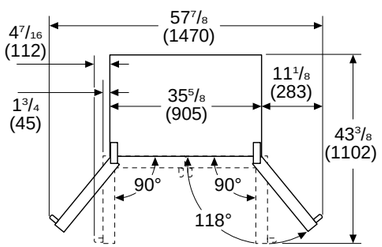

Drawers can be pulled out with door open to 90°
Drawers can be taken out with door completely opened

Measurements in inches (mm)

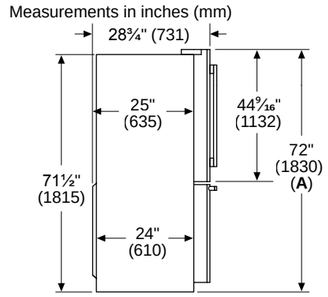

A: Add 5/8" (17) with front leveling feet fully extended

measurements in inches (mm)

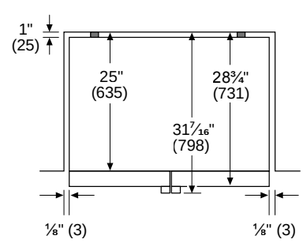

Freestanding French Door Bottom Freezer Accessories

Water Filter
REPLFLTR55
Replacement water filter for use in all freezer and bottom freezer models for built-in and freestanding.

Ethylene Filter Starter Kit
17005228

Ethylene Filter Refill
17005225

INSTALLATION

Freestanding French Door Bottom Freezers

36-Inch Stainless Steel Freestanding French Door Bottom Freezer with Masterpiece® Handles – T36FT810NS

Cutout Dimensions

measurements in inches (mm)

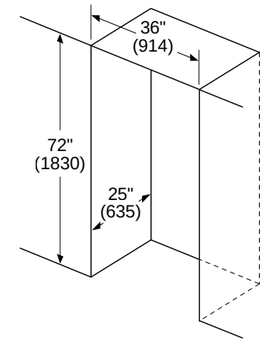

Leave ½" (12.7) gap at the top and 1" (25.4) behind the refrigerator for proper ventilation.

It is recommended that you do not install the refrigerator near a heat source such as a stove or a range.

Panel Dimensions

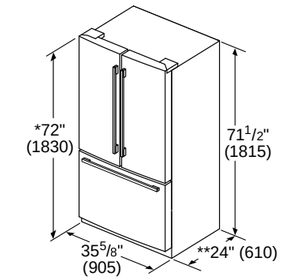

*Add 5/8" (17) with front leveling feet fully extended
** Add 1" (25) for fixed spacers on back

measurements in inches (mm)

Top View Clearance

Measurements in inches (mm)

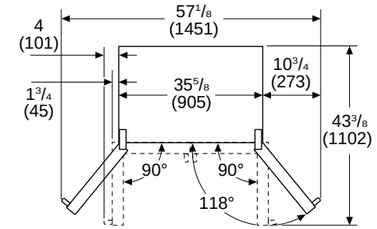

Drawers can be pulled out with door open to 90°
Drawers can be taken out with door completely opened

Measurements in inches (mm)

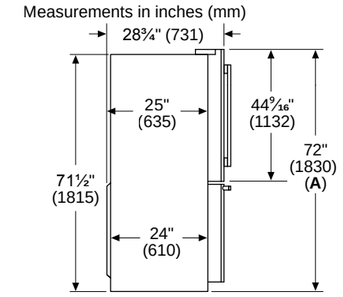

A: Add 5/8" (17) with front leveling feet fully extended

measurements in inches (mm)

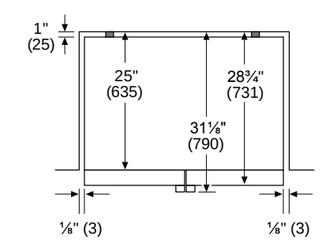

Thermador Design Tip

Mix and match refrigerator, freezer, and wine column sizes to suit your unique preservation needs.

23.5" REPLACEMENT REFRIGERATION COLUMN

Designed with Your Kitchen in Mind

Specially-designed 23.5" refrigerator unit features the same interior capacity as a 24" column, but has been crafted to seamlessly pair with any 18" or 24" freezer. Together, they will perfectly fit into predetermined 42" or 48" spaces—without the need to adjust existing cabinetry.

23.5-Inch Built-In Panel-Ready Fresh Food Column

18-Inch Built-In Panel-Ready Freezer Column

24-Inch Built-In Panel-Ready Freezer Column

Kitchen Designed by: Natalie Stanichuk

PLANNING INFORMATION

Under-Counter Refrigeration

Model Options

The Under-counter Freedom® Refrigeration Collection includes a glass door refrigerator, a glass door wine reserve, a double refrigerator drawer unit and a double refrigerator / freezer drawer unit. Glass door models are available in right-hinged and left-hinged options. All units install fully flush to be seamlessly integrated into 24" depth cabinetry. Each unit is available custom-panel ready or in stainless steel with a Masterpiece® or Professional Handle to complement the entire collection of Thermador appliances.

Installation Considerations

Location

The appliance should be installed in a dry, ventilated room. It may not be installed outdoors. The ambient temperature of the room should stay between 55°F (13°C) and 110°F (43°C).

The appliance should not be exposed to excessive heat. If installation next to a heat source, such as an oven, radiator, etc. is unavoidable, observe the following minimum distances from the heat source:

- 1" (25 mm) from another refrigerator or wine reserve,
- 1 1/4" (30 mm) from an electric cooking appliance,
- 11 13/16" (300 mm) from an oil or solid-fuel cooking appliance.

Ensure that the exterior air vent is not blocked by cabinetry or other elements.

Electrical Specifications

The appliance comes with a 3-wire power supply cord (NEMA 5-15p), UL-listed in the USA and requires a 3-wire receptacle that is fitted with a 15- or 20-Amp fuse.

Grounding Instruction

This appliance must be grounded. In the event of a malfunction or breakdown, grounding will reduce the risk of electric shock by providing a path of least resistance for the electric current.

Additional Grounding Procedure

Some local regulations may require a separate ground. In such cases, the required accessory ground wire, clamp and screw must be purchased separately. Never ground the appliance to plastic plumbing lines, gas lines or water pipes.

A 4-conductor cord shall be used when the appliance is installed in an area where local codes do not permit grounding through the neutral. Power supply cord must be replaced by a licensed electrician only.

Warning

Improper connection of the equipment grounding conductor may result in electric shock. Have the appliance checked by a qualified electrician or service technician if you are in doubt as to whether the appliance has been properly grounded.

Electrical Location

The receptacle must be near the appliance: 61" (1550 mm) to the right of the appliance or 37" (940 mm) to the left of the appliance, and also freely accessible following installation of the appliance for future service.

Water Supply

Units with an icemaker require a connection to a water supply. The pressure of the water supply coming out of a reverse osmosis system going to the water inlet valve of the refrigerator needs to be between 30 and 120 psi (207 and 827 kPa). If a reverse osmosis water filtration system is connected to your cold water supply the water pressure to the reverse osmosis system needs to be a minimum of 40 to 60 psi (276 to 414 kPa). Refer to the Installation Guide for details if the water pressure is less.

INSTALLATION

Under-Counter Refrigeration

Glass Door Refrigerator and Glass Door Wine Reserve

Product Dimensions

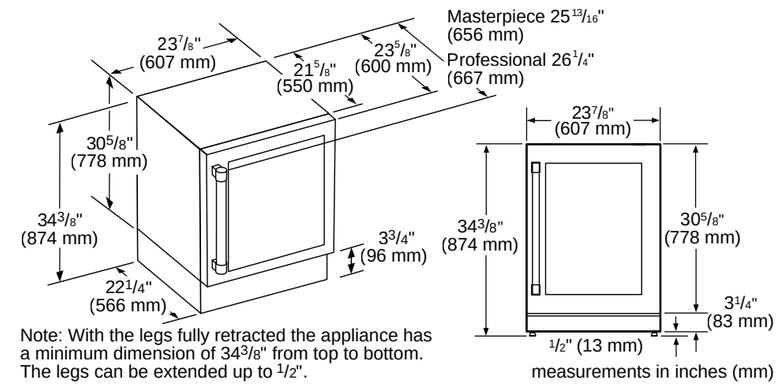

Note: With the legs fully retracted the appliance has a minimum dimension of 34 3/8" from top to bottom. The legs can be extended up to 1/2".

measurements in inches (mm)

Cutout Dimensions

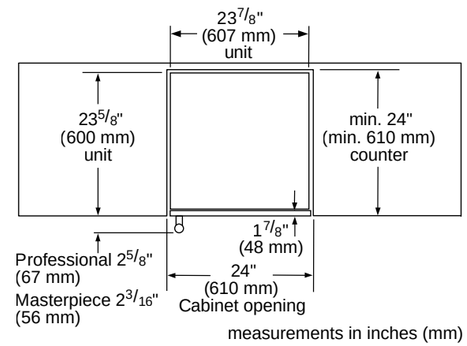

measurements in inches (mm)

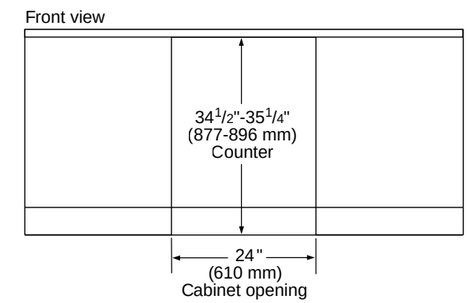

measurements in inches (mm)

Cutout Dimensions & Electrical Location

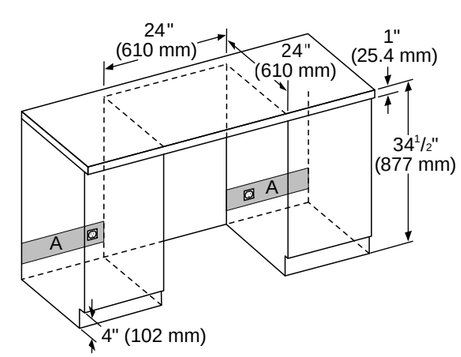

A:
Recommended area for installation connection - a 2 1/2" (63 mm) diameter hole is recommended. Location of power cord at base of the appliance.

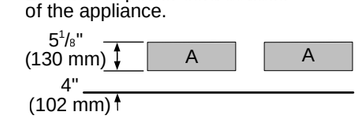

For flush installation, recommend outlet to be placed to the side of the unit and not directly behind.

measurements in inches (mm)

Glass Door Refrigerator and Glass Door Wine Reserve

Cutout & Door Swing Dimensions

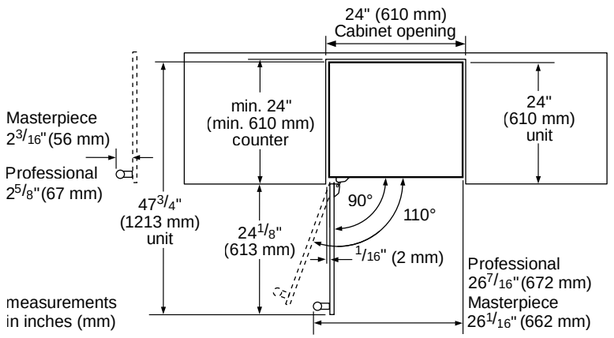

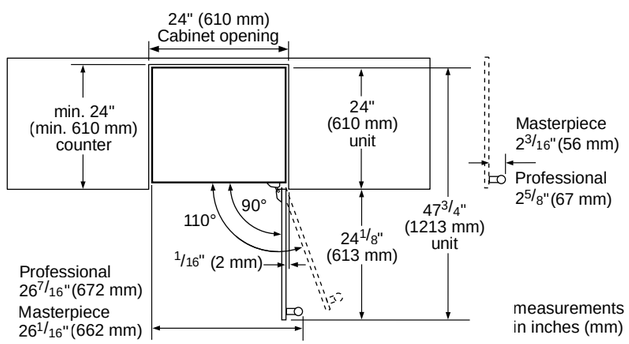

Side-By-Side Installation

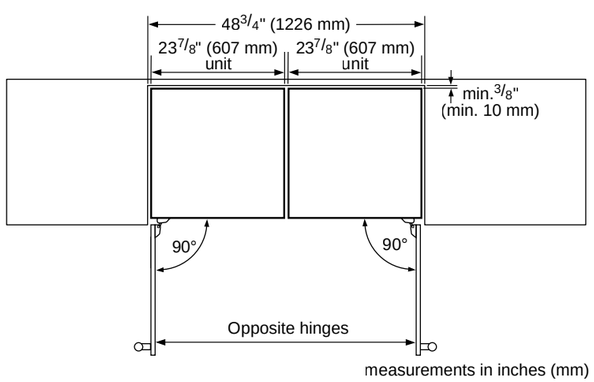

Glass Door Refrigerator and Glass Door Wine Reserve

Custom Panel Dimensions

Overlay Panel – Rear View

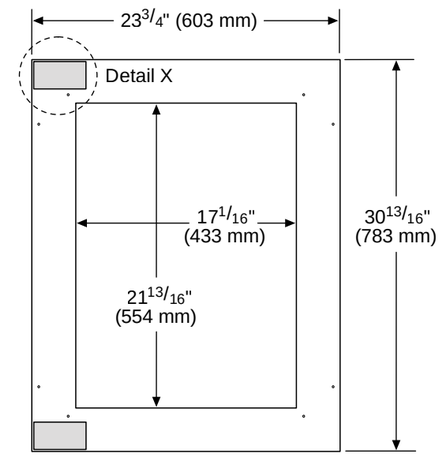

Important:
- The thickness of the overlay panel must be 3/4" (19 mm).
- Overlay panel must not weigh more than 10 lbs (4.54 kg).
- Overlay panel weighing more than recommended may cause damage to your appliance.
- To install the panel, use only the screws included in the "Installation Kit".

Create the custom overlay panel using the dimensions shown.

Important:
The following graphics show a custom panel for a door with hinges installed on the right-hand side.
If your unit has hinges installed on the left-hand side, rotate the custom panel 180° so the markings will be on the left.

Detail X

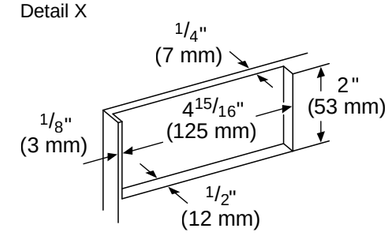

measurements in inches (mm)

Double Drawer Refrigerator and Double Drawer Refrigerator / Freezer

Product Dimensions

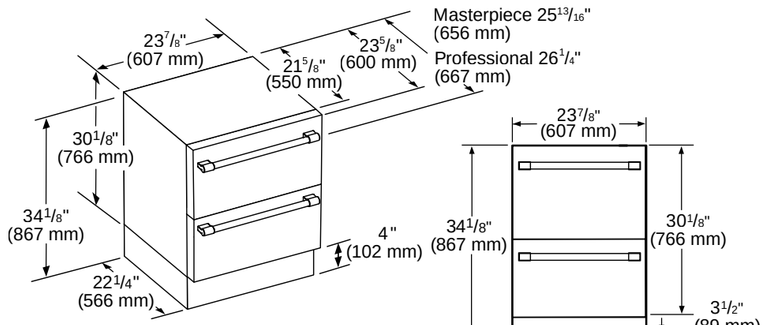

Note: With the legs fully retracted the appliance has a minimum dimension of 34 1/8" from top to bottom. The legs can be extended up to 1/2".

measurements in inches (mm)

Cutout Dimensions

Top view

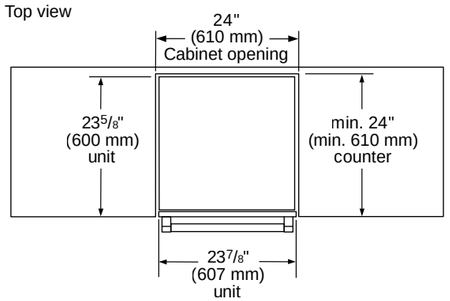

Thermador double drawer under counter top dimension.
(Unit door flushed with the cutout) measurements in inches (mm)

Front view

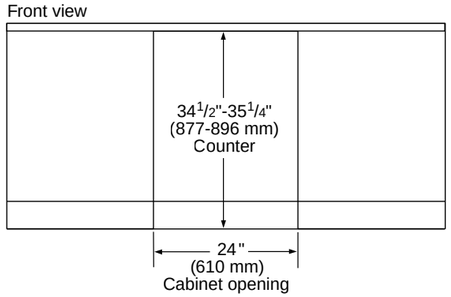

measurements in inches (mm)

Clearance Dimensions

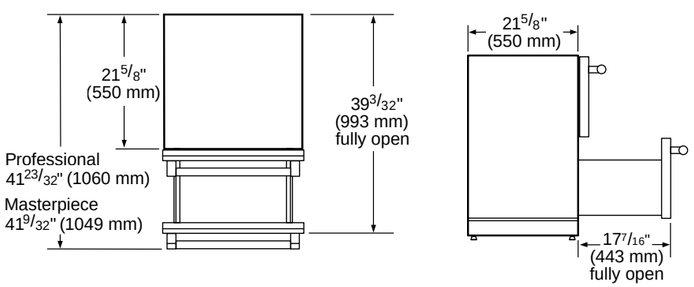

measurements in inches (mm)

Double Drawer Refrigerator and Double Drawer Refrigerator / Freezer

Side-By-Side Installation

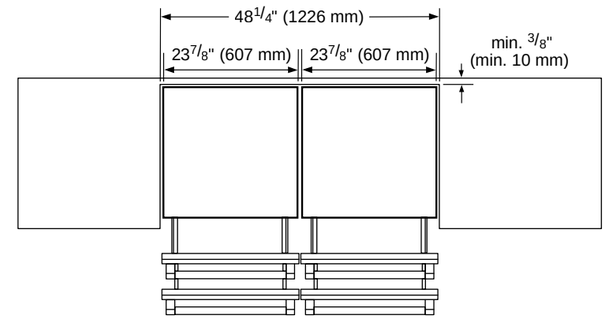

measurements in inches (mm)

Double Drawer Refrigerator Cutout Dimensions & Electrical Location

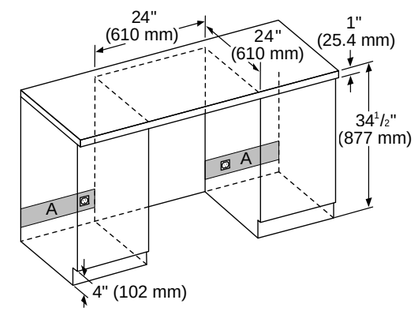

A:
Recommended area for installation connection - a 2 1/2" (63 mm) diameter hole is recommended. Location of power cord at base of the appliance.

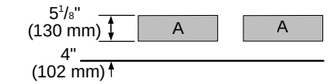

For flush installation, recommend outlet to be placed to the side of the unit and not directly behind.

measurements in inches (mm)

Double Drawer Refrigerator / Freezer Cutout Dimensions & Electrical Location

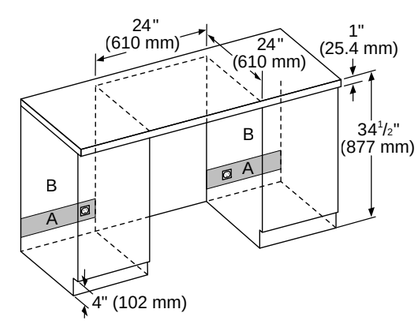

A:
Recommended area for installation connection - a 2 1/2" (63 mm) diameter hole is recommended. Location of power cord at base of the appliance.

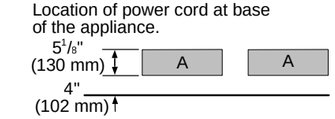

B:
It is recommended that the water connection is placed adjacent to the installation cavity, so that it can be accessed without uninstalling the appliance.

For flush installation, recommend outlet and water connection to be placed to the side of the unit and not directly behind.

measurements in inches (mm)

INSTALLATION

Under-Counter Refrigeration

Double Drawer Refrigerator and Double Drawer Refrigerator / Freezer Custom Panel Dimensions

Top Drawer

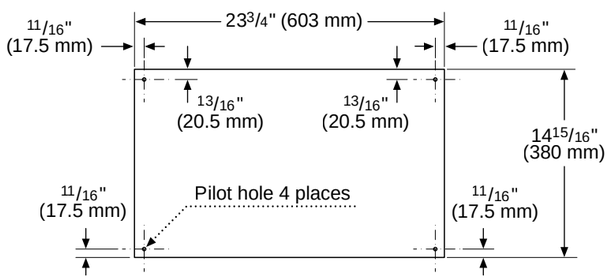

Bottom Drawer

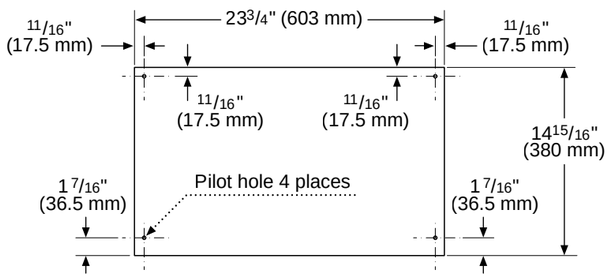

Important:

- The thickness of both the overlay panels must be 3/4" (19 mm).
- Overlay panel must not weigh more than 10 lbs (4.54 kg) each.
- Overlay panels weighing more than recommended may cause damage to your appliance.
- It is recommended to have the help of a second person to install the panel.
- Use the recommended tools in the installation manual to facilitate the installation of the panel. Failure to use the recommended tools or the help of a second person may result in damage to panel and/or the appliance.
- To install the panel, use only the screws included in the “Installation Kit”.

Create the custom overlay panel using the dimensions shown.

measurements in inches (mm)

Visit Thermador.com for complete specifications or text a Thermador model number to 21432 to have specs sent to your phone

Thermador Exclusive

Without the use of chemicals, and with no need for replenishment, our StarDry™ with Zeolite even dries containers with hard-to-reach crevices.

DISHWASHERS

FOR MASTERPIECE® & PROFESSIONAL COLLECTIONS

Introducing the Radiance Collection: a suite of dish care designed specifically for avid entertainers and exceptional cooks with unparalleled drying ability, capacity, speed and flexibility.

STAR SAPPHIRE® DISHWASHER

Masterpiece® Handle Dishwasher
7 CYCLES, 7 OPTIONS – DWHD770CFM

The VERSATILITY OF DESIGN

DISHWASHERS

With options for Stainless Steel paired with our Professional or Masterpiece® handles, or a custom panel with design of your choice, explore unique options to perfectly complement your kitchen design.

Flat Stainless Steel Panel with Professional Handle

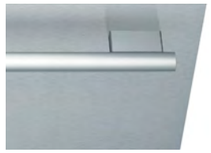

Flat Stainless Steel Panel with Masterpiece® Handle

Custom Panel to Match Your Cabinetry

Fully Flush Custom Panel Dishwashers

Custom Design

Match your kitchen's custom cabinetry to our dishwasher for complete integration. Thermador custom panel dishwashers install fully flush for a seamless, integrated look.

Protect Your Fine Wood Cabinets

Thermador dishwashers feature a unique condensation drying system designed to reduce the risk of steam damage over time to custom panel wood cabinetry and countertops. The closed system heats dishes with hot water from the final rinse resulting in the ultimate drying performance.

Kitchen Designed by: Ili Hidalgo-Nilsson, Terracotta Design Build Co.

STAR SAPPHIRE®

Dishwashers

7 Cycles, 7 Options

Home Connect

2021 PROBUILDER TOP100 PRODUCTS

Features

- Powerfully Quiet—42 dBA
- Stainless Steel Tub
- Time Remaining PowerBeam®
- Premium Capacitive Touch Controls
- TFT Display
- Entertainer's Drawer Third Rack
- Lower Rack Folding Glass Care Rack
- Multi-color Star Glow Interior Light
- Crystal Protect® Water Softener System
- StarDry™ with Zeolite
- NSF®-Certified* Sanitize Cycle / Option
- *Thermador® Connected Experience by Home Connect®*

Professional Handle

7 Cycles, 7 Options – DWHD770CFP

Masterpiece® Handle

7 Cycles, 7 Options – DWHD770CFM

Custom Panel

7 Cycles, 7 Options – DWHD770CPR

*Certification to NSF / ANSI Standard 184 for residential dishwashers

SAPPHIRE®

Dishwashers

7 Cycles, 6 Options

Home Connect

2021 PROBUILDER TOP100 PRODUCTS

Features

- Exceptionally Quiet—44 dBA
- Stainless Steel Tub
- Time Remaining PowerBeam®
- Touch Controls
- LED Display
- Adjustable Chef's Tool Drawer® Third Rack
- Flexible Folding Tines
- Blue Sapphire Glow® Interior Light
- Crystal Protect® Water Softener System
- StarDry™ with Zeolite
- NSF®-Certified* Sanitize Cycle / Option
- *Thermador® Connected Experience by Home Connect®*

Professional Handle

7 Cycles, 6 Options – DWHD760CFP

Masterpiece® Handle

7 Cycles, 6 Options – DWHD760CFM

Custom Panel

7 Cycles, 6 Options – DWHD760CPR

*Certification to NSF / ANSI Standard 184 for residential dishwashers

EMERALD®

Dishwashers

5 Cycles, 6 Options

Home Connect

Features

- Effectively Quiet—48 dBA
- Stainless Steel Tub
- Blue PowerBeam® Indicator Light
- Touch Controls
- LED Display
- Chef's Tool Drawer® Third Rack
- Three Stage Advanced Filtration
- 3-Level Adjustable Upper Rack
- NSF®-Certified* Sanitize Cycle / Option
- *Thermador® Connected Experience by Home Connect®*

Professional Handle

5 Cycles, 6 Options – DWHD560CFP

Masterpiece® Handle

5 Cycles, 6 Options – DWHD560CFM

Custom Panel

5 Cycles, 6 Options – DWHD560CPR

See page 240 for accessories
Visit Thermador.com for complete specifications or text a Thermador model number to 21432 to have specs sent to your phone

DISHWASHERS QUICK REFERENCE CHART

	Star Sapphire®	*Sapphire®*	*Emerald®*
Professional Handle	DWHD770CFP	DWHD760CFP	DWHD560CFP
Masterpiece® Handle	DWHD770CFM	DWHD760CFM	DWHD560CFM
Custom Panel	DWHD770CPR	DWHD760CPR	DWHD560CPR
Key Features			
Number Of Wash Cycles	7	7	5
Number Of Options	7	6	6
dBA	42	44	48
Third Rack	Entertainer's Drawer	Adjustable Chef's Tool Drawer®	Chef's Tool Drawer®
StarDry™ with Zeolite	Yes	Yes	No
Interior Lighting	Star Glow	Sapphire Glow®	No
Cycle Status Indicator	Time Remaining PowerBeam®	Time Remaining PowerBeam®	Blue PowerBeam®
Number Of Place Settings	16	16	16
Wine Glass Capacity	18	6	6
Thermador® Connected Experience by Home Connect® (Wi-Fi enabled)	Yes	Yes	Yes
General Properties			
Tub Material	Stainless Steel	Stainless Steel	Stainless Steel
Control Type	Premium Touch Controls	Touch Controls	Touch Control
Concealed Water Heating Element	Yes	Yes	Yes
Leak Protection System	24/7 AquaStop®	24/7 AquaStop®	24/7 AquaStop®
Water Softener	Yes	Yes	No
Efficiency			
Energy Efficiency Class	Tier 1	Tier 1	Tier 1
Dimensions			
Professional & Masterpiece® Models – Overall Appliance Dimensions (HxWxD) (in)	33 7/8" x 23 9/16" x 23 3/4"	33 7/8" x 23 9/16" x 23 3/4"	33 7/8" x 23 9/16" x 23 3/4"
Custom Panel Models – Overall Appliance Dimensions (HxWxD) (in)	33 7/8" x 23 9/16" x 23 1/16"	33 7/8" x 23 9/16" x 23 1/16"	33 7/8" x 23 9/16" x 23 1/16"
Required Cutout Size (HxWxD) (in)	33 7/8" Min. x 23 5/8" Min. x 24"	33 7/8" Min. x 23 5/8" Min. x 24"	33 7/8" Min. x 23 5/8" Min. x 24"

Visit Thermador.com for complete specifications or text a Thermador model number to 21432 to have specs sent to your phone

ENTERTAINER'S CORNER

A Destination Spot, at Home

Enjoy barista-style coffee or sip on craft cocktails—all within the luxury and tranquility of your own home.

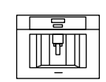

24-Inch Built-In Coffee Machine

24-Inch Custom Panel Sapphire® Dishwasher

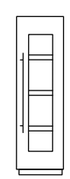

24-Inch Built-In Panel-Ready Wine Preservation Column

PLANNING INFORMATION

Dishwashers

Model Options

All collections are available with a Masterpiece® or Professional Handle to perfectly match other Thermador appliances in your kitchen, or a custom panel option to fully integrate with your cabinetry. Be sure to reference the correct model information in this design guide.

Installation Options

Custom Door Panels

Thermador custom panel dishwashers can be installed fully flushed for a seamless, integrated look.

Fully integrated models allow you to have a custom door panel made to match your cabinetry. The custom door can be a two-piece configuration to look like a drawer at the top and a cabinet door at the bottom or like a single full-length door. A template is included with the fully integrated models to explain the mounting procedure.

NOTE: These dishwashers can accept custom door panel weights ranging from 7 to 24 lbs.; however, the dishwasher comes from the factory ready for custom panel door weights from 11 to 18 lbs. If you plan on using a door panel that is not 11 to 18 lbs., please contact customer service at (800) 944-2904.

Installation Considerations

The information in this design guide provides key features, product dimensions, cutouts and installation specifications. Before installing a Thermador Dishwasher, be sure to verify the cabinet dimensions, electrical connections and water connections. Installation instructions are subject to change. Always consult with the installation manual included with the product for complete details prior to the installation.

Thermador Dishwashers are designed to be enclosed on the top and both sides by standard residential kitchen cabinetry.

If the dishwasher is to be installed in a corner, make sure that there is adequate clearance to open the door.

Hot Water Supply

The hot water heater should be set to deliver approximately 120° F (49° C) water to the dishwasher. Water that is too hot can cause some detergents to lose effectiveness. Lower water temperatures will increase run times. The hot water supply pressure must be between 15–145 psi (1–10 bar).

All Thermador Dishwashers are ENERGY STAR® Certified

Electrical Specifications

This appliance must be grounded to a metal, permanent wiring system, or an equipment grounding conductor must be run with the circuit conductors and connected to the equipment grounding terminal or lead on the dishwasher.

Model	*Required Circuit Breaker*
All Dishwasher Models	120 V, 60 Hz, 12 A

Water and Electrical Locations

For proper dishwasher operation and appearance, ensure that the enclosure is square and has the dimensions shown in the cutout drawings on the following page. Select a location as close to the sink as possible for easy access to water supply and drain lines.

Make required openings to allow for passage of the water, drain and electrical line. In order to avoid interference with the dishwasher when sliding it into the cabinet, the holes should be cut within the 7 x 2.5" area shown.

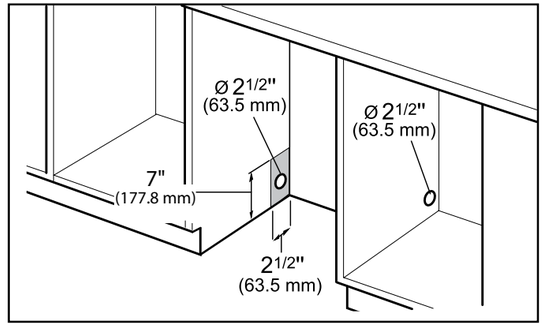

NOTE: Plumbing installations will vary — refer to local codes. The maximum length of the drain hose, including hose leading to air gap (if any) is 150" (380 cm). Ensure a portion of the drain hose is raised at least 33" (84 cm) above the floor to ensure proper draining.

Optional Accessories

SGZ1010UC	Dishwasher Supply and Drainage Hose Extension 76 3/4"
SMZ5000	Dishwasher Accessory Kit
SMZ5002UC	Fine Silverware Carafe
SMZPCJB1UC	Junction Box

Accessory Kit includes Extra-Tall-Item Sprinkler, Vase / Bottle Holder, 3 Plastic Item Clips and Small Item Basket

Fine Silverware Carafe

INSTALLATION

Dishwashers

Dishwasher & Cutout Dimensions – Professional and Masterpiece® Handle

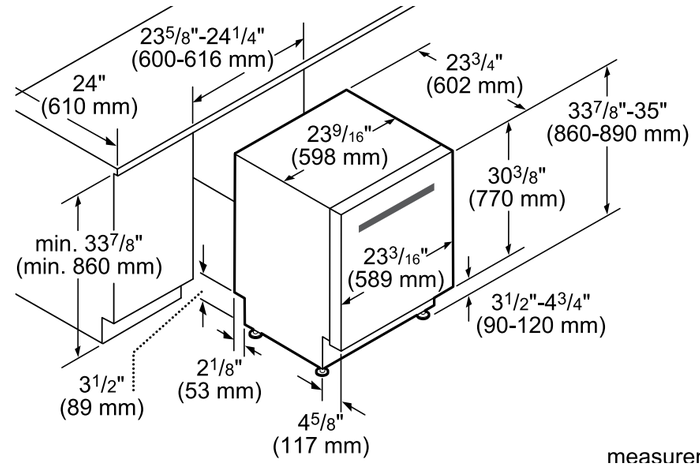

measurements in inches and mm

Dishwasher & Cutout Dimensions – Custom Panel

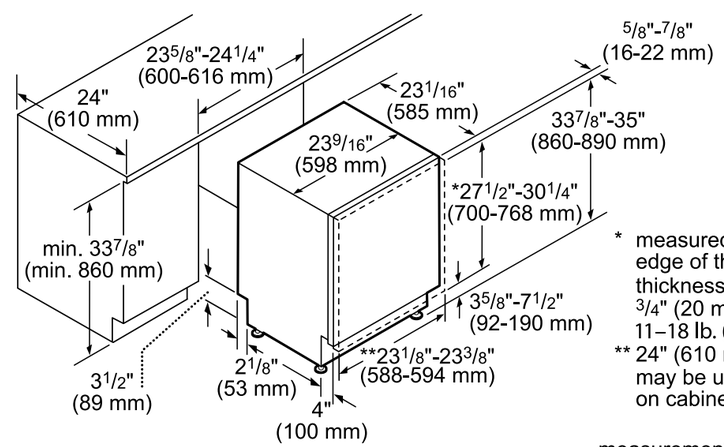

* measured from the bottom edge of the countertop panel thickness recommended 3/4" (20 mm) panel weight 11–18 lb. (5–8 kg)

** 24" (610 mm) wide panel may be used depending on cabinet design

measurements in inches and mm

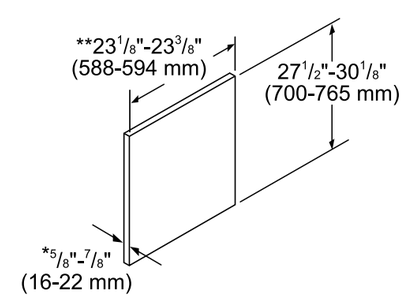

* thickness recommended 3/4" (20 mm), panel weight 11–18 lb. (5–8 kg)

** 24" (610 mm) wide panel may be used depending on cabinet design

measurements in inches and mm

Thermador Exclusive

Store up to 8 personalized beverages by name so family members and guests can program and save their favorite drinks.

Built-in COFFEE MACHINE

FOR MASTERPIECE® & PROFESSIONAL COLLECTIONS

With 8 personalized beverages by name, multiple people can program their favorite coffee and tea beverages. And with options for both plumbed and non-plumbed units, you can incorporate in any room in the home.

BUILT-IN COFFEE MACHINE

Professional & Masterpiece®
24-INCH – TCM24PS

BUILT-IN COFFEE MACHINE

24-Inch Professional & Masterpiece®

Home Connect

Plumbed Installation

- Direct Plumbed Installation for Water and Drain Connection
- Equipped with the *Thermador® Connected Experience by Home Connect®*

24-Inch – TCM24PS

Home Connect

Non-Plumbed Installation

- Refillable Water Reservoir
- Equipped with the *Thermador® Connected Experience by Home Connect®*

24-Inch – TCM24TS

Optional Accessory

- TCM24PS shown with optional trim kit

30-Inch Stainless Steel Trim Kit – TCMTK30RS

See page 246 for accessories
Visit Thermador.com for complete specifications or text a Thermador model number to 21432 to have specs sent to your phone.

Kitchen Designed by: Marc Thee

MUST-HAVE SPACES

Think Outside the Kitchen

Bring Thermador into ancillary spaces to add a touch of luxury. Whether you're enhancing your bedroom or completing your wet bar, refine your daily rituals with Thermador luxury smart appliances designed for exceptional living.

24-Inch Built-in Wine Preservation Column

24-Inch Built-in Coffee Machine

24-Inch Custom Panel Dishwasher

Kitchen Designed by: Brittany Bromley

PLANNING INFORMATION

Built-In Coffee Machine, Professional & Masterpiece®

Model Options

The Thermador Built-in Coffee Machine is available in two options for use in a plumbed or non-plumbed installation. Both models feature a stainless steel finish and design that coordinates with both the Professional and Masterpiece® collection. An optional trim kit is available for 30" cutout installations.

Installation Considerations

The information in this design guide provides key features, product dimensions, cutouts and installation specifications. Before installing a Thermador Built-in Coffee Machine, be sure to verify the cabinet dimensions and water / electrical connections. Installation instructions are subject to change. Always consult with the installation manual included with the product for complete details prior to the installation.

Installation Options

Plumbed

With a new option for built-in drainage instead of a water tank, Thermador plumbed Built-in Coffee Machines help ensure your machine is ready to operate. A water and drain connection eliminate the need to empty a drip tray, while water replenishment flows water directly into the machine from a plumbed water source, eliminating the need to fill a water container.

Non-Plumbed

Thermador non-plumbed Built-in Coffee Machines can be installed without an additional water line in the home—enabling installation in a bedroom, guest room, office and beyond.

Important

Make sure there is adequate ventilation. To do this, remove the rear panel or cut out an opening of 19 $^{11}/_{16}$" x 15 $^{3}/_{4}$" (500 x 400 mm). There must be a gap of at least 1 $^{3}/_{8}$" (35 mm) between the wall and base of the unit or the rear panel of the unit situated above.

The ventilation slots and intake openings must not be covered.

Also follow the installation instructions for the appliance situated above or below.

The ideal installation height for the fully automatic espresso machine, measured from the floor to the lower edge of the appliance, is 37 $^{1}/_{2}$" to 57" (95–145 cm).

If installing the appliance above a warming drawer, the height of the recess must be 23 $^{1}/_{4}$" (590 mm). If the appliance is installed directly under a décor panel, ensure that there is a ventilation slot of at least 31 square inches (200 cm²). The ideal installation height for the fully automatic coffee machine, measured from the floor to the lower edge of the appliance, is 37 $^{7}/_{16}$" (950 mm).

Electrical Specifications

Be sure your appliance is properly installed and grounded by a qualified technician. Installation, electrical connections and grounding must comply with all applicable local codes.

Thermador Built-in Coffee Machines are equipped with a 39-inch, 3-wire supply cord with a NEMA 5-15R plug. It is designed to be connected to a 120V AC, 60Hz, single phase power supply.

Model	*Required Circuit Breaker*
TCM24PS	120 V, 60 Hz, 15 A
TCM24TS	120 V, 60 Hz, 15 A

Optional Accessories

TCMTK30RS – 30-Inch
Stainless Steel Trim Kit

11005967 Stainless Steel Milk Container
11015223 1 Lb. Bean Container
12008246 Water Filter
00573828 Descaling Tablets
00573829 Cleaning Tablets

INSTALLATION

Built-In Coffee Machine, Professional & Masterpiece®

Plumbed Coffee Machine Product & Cutout Dimensions

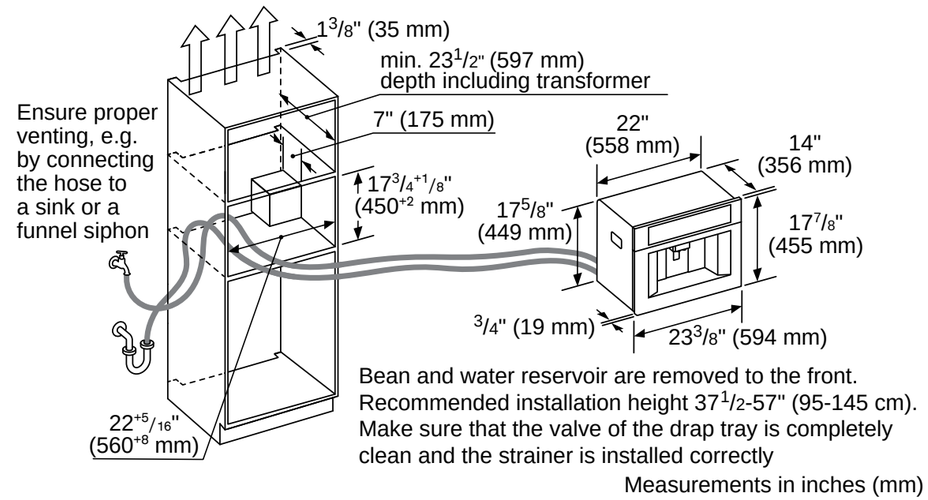

Plumbed Coffee Machine Water and Electrical Connections

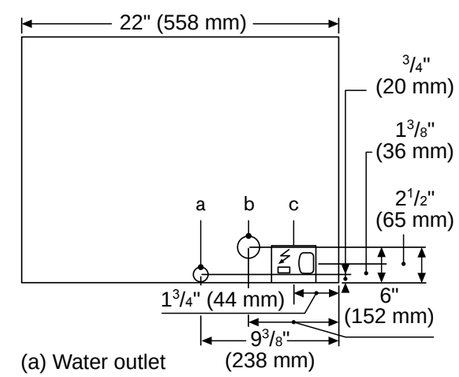

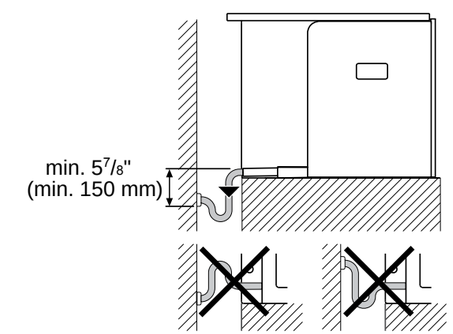

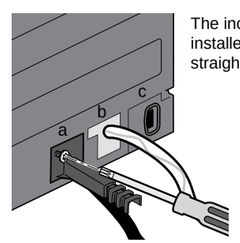

The included red hose guide must be installed. The drain hose must be guided straight at the outlet point from the machine.

The drain hose must be installed with a continuous gradient and a height difference of more than 6".

There should be no loops, clews, double siphon or sagging in the drain hose that can interfere with water flow or cause water accumulation in the drain hose.

Non-Plumbed Coffee Machine Product & Cutout Dimensions

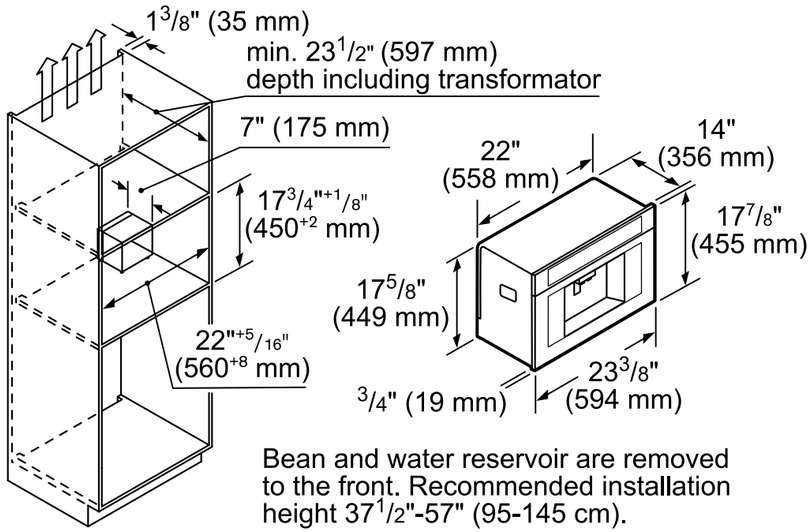

Plumbed and Non-Plumbed Coffee Machine Flush Install

Side View

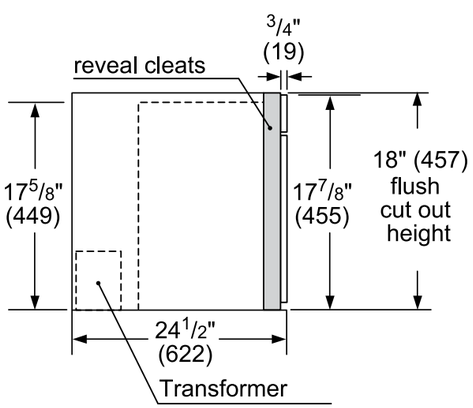

measurements in inches (mm)

Top View

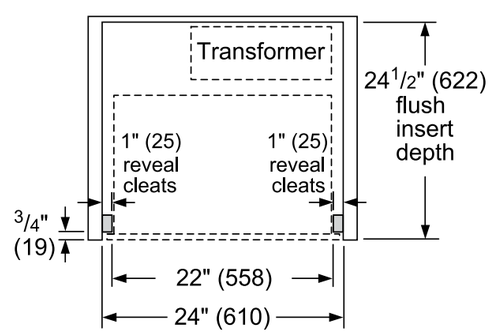

measurements in inches (mm)

INSTALLATION
Built-In Coffee Machine, Professional & Masterpiece®

Plumbed and Non-Plumbed Coffee Machine Flush Install with Optional 30-Inch Trim Kit TCMTK30RS

inches (mm)

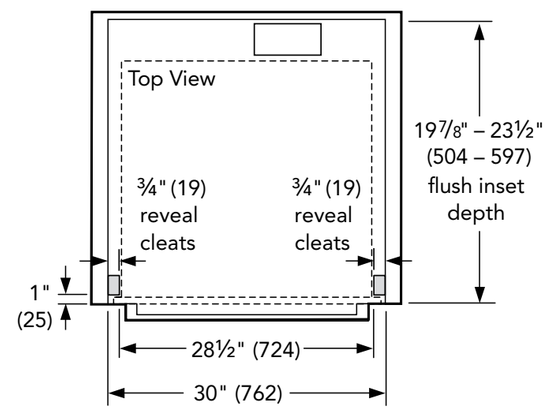

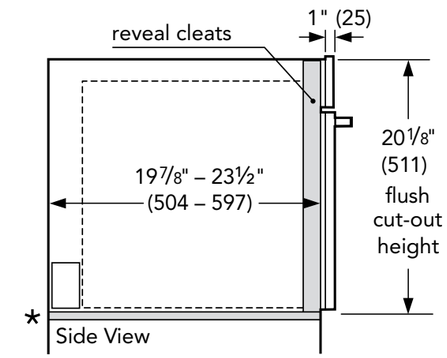

NOTE: * Flush installation requires a 5/16" (8 mm) high x 28½" (724 mm) wide x 22½" (571 mm) deep baseplate underneath the unit body.

Plumbed and Non-Plumbed Coffee Machine Cutout Dimensions with Optional 30-Inch Trim Kit TCMTK30RS

inches (mm)

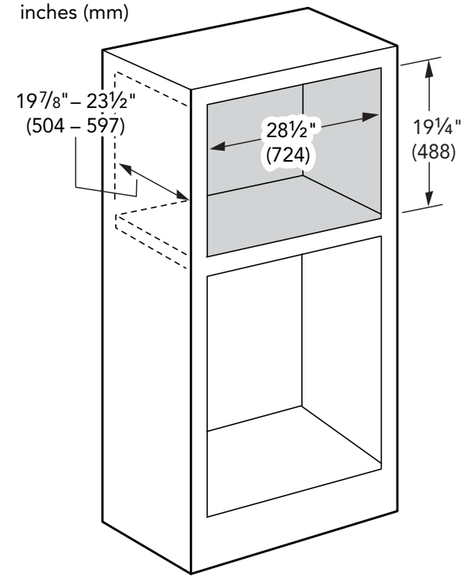

inches (mm)

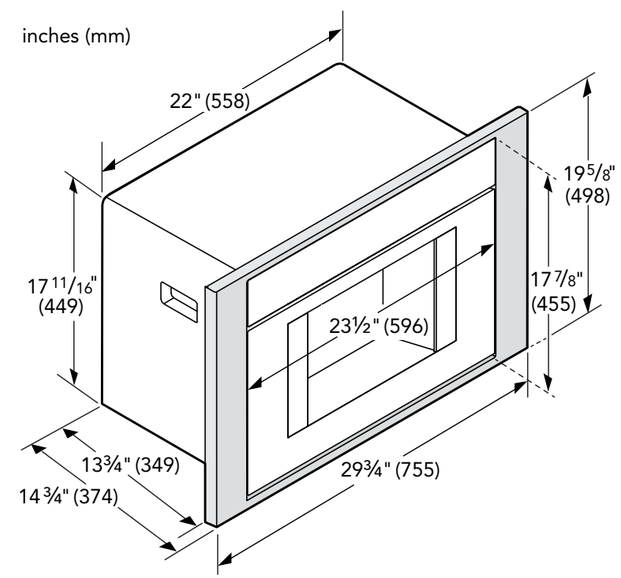

LEAP INTO LUXURY

Exceptionally Designed, Irresistibly Priced

Introducing products with price points that work with any budget: Our first-ever 72" Tall Freestanding Refrigerator, as well as our new Masterpiece® 30" Single and Double Wall Ovens with Professional handles.

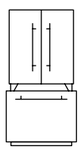

72-Inch High, Masterpiece® Freestanding French Door Bottom Freezer

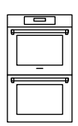

30-Inch Masterpiece® Double Oven with Professional Handles

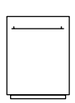

24-Inch Custom Panel Dishwasher

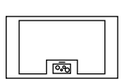

36-Inch Freedom® Induction Cooktop

PRODUCT *WARRANTY*

Professional Ranges
Limited warranty, entire appliance, parts and labor (2 year)

Professional Rangetops
Limited warranty, entire appliance, parts and labor (2 year)

Built-In Ovens
Limited warranty parts and labor (2 year)

Induction Cooktops
Limited warranty, entire appliance, parts and labor (2 year)

Gas Cooktops
Limited warranty, entire appliance, parts and labor (2 year)

Electric Cooktops
Limited warranty, entire appliance, parts and labor (2 year)

Ventilation
Limited warranty, entire appliance, parts and labor (2 year)

Warming & Storage Drawers
Limited warranty, entire appliance, parts and labor (2 year)

Built-In Microwaves
Limited warranty, entire appliance, parts and labor (2 year)

Refrigeration
Limited two-year warranty, entire appliance, parts and labor on any part of the refrigerator that fails because of a manufacturing defect

Limited warranty for sealed refrigeration system*; parts and labor (3rd to 6th year)

Limited warranty for sealed refrigeration system*; parts only (7th to 12th year)

*Sealed refrigeration system includes compressor, evaporator, condenser, dryer / strainer and connection tubing

Dishwashers
Limited warranty, entire appliance, parts and labor (2 year)

Limited warranty for microprocessor or printed circuit board; parts only (3rd to 5th year)

Limited warranty for racks (does not include rack components); parts only (3rd to 5th year)

Limited warranty for rust-through on inner tub liner; parts only (Lifetime)

Built-In Coffee Machines
Limited warranty, entire appliance, parts and labor (2 year)

2-YEAR WARRANTY

These warranties give you specific legal rights and you may have other rights that vary from state to state. Limited Warranty from Date of Purchase. For complete warranty details, refer to your Use & Care manual, or ask your dealer.

Specifications are for planning purposes only. Refer to installation instructions and consult your countertop supplier prior to making counter opening. Consult with a heating and ventilation engineer for your specific ventilation requirements. For the most detailed information, refer to installation instructions accompanying product or write to Thermador® indicating the model number. Specifications are correct at time of printing. Thermador reserves the right to change product specifications or design without notice. Some models are certified for use in Canada. Thermador is not responsible for products that are transported from the U.S. for use in Canada.

©2023 BSH Home Appliances Corporation.

EXPERIENCE *THERMADOR®*

Thermador is committed to supporting you throughout all of your culinary endeavors. Whether you would like to research our products, learn more about the use and care of your appliances, or spice up your next dinner party with new and unique recipes, explore a world of resources at thermador.com.

Take Us With You

Text a Thermador model number to 21432, to have specs sent to your phone.

Text LOOKBOOK or DESIGN GUIDE to 21432 to get the Thermador Lookbook or Design Guide sent to your phone.

Virtual Showroom Tour

Get a dynamic and up-close look at every industry-leading appliance you've had your eye on. Take a Virtual Showroom tour to view—and interact—with our entire collection of appliances. It's not every day you get the showroom all to yourself, so take your time, and get inspired at thermador.com/us/experience/showrooms.

Exceptional Customer Care 24/7

For dedicated customer service on any Thermador product: call 1-800-735-4328 or contact us at thermador.com.

Follow Us

- thermador.com/blog
- @thermador
- @thermadorhome
- @thermador
- @thermador
- youtube.com/thermadorhome

PRODUCT INDEX

Thermador

Pro Harmony® Ranges

★ PRD486WDHU	10
★ PRD364WDHU	10
★ PRD366WHU	10
★ PRI36LBHU	10
PRD305WHU	10
PRD304WHU	10
★ PRI30LBHU	10
★ PRG486WDH	11
★ PRG364WDH	11
★ PRG366WH	11
PRG305WH	11
PRG304WH	11

Pro Grand® Ranges

★ PRD606WESG	12
★ PRD606WEG	12
★ PRD48WISGU	12
★ PRD48WDSGU	12
★ PRD486WIGU	13
★ PRD486WDGU	13
★ PRG486WDG	13
★ PRD364WIGU	13
★ PRD364WDGU	13
★ PRD366WGU	13
★ PRG364WDG	13
★ PRG366WG	13

Professional Rangetops

PCG486WD	43
PCG364WD	43
PCG366W	43
PCG305W	43

Built-In Ovens

★ PODS301W	56
★ MEDS301WS	56
MC30WP	56
MC30WS	56
★ POD301W	57
★ POD301LW	57
★ POD301RW	57
★ PO301W	57
★ ME301YP	57
★ MED301WS	57
★ MED301LWS	57
★ MED301RWS	57
★ ME301WS	57
★ PODS302W	58
★ MEDS302WS	58
★ PODMCW31W	58
★ MEDMCW31WS	58
★ PODMC301W	58
★ MEDMC301WS	58
★ POM301W	58
★ MEM301WS	58
★ POD302W	59
★ POD302LW	59
★ POD302RW	59
★ PO302W	59
★ ME302YP	59
★ MED302WS	59
★ MED302LWS	59
★ MED302RWS	59
★ ME302WS	59

Built-In Microwaves

MD30WS	82
MD24WS	82
MB30WP	82
MB30WS	82
MU30WSU	82

Warming & Storage Drawers

WD30W	83
WD30WC	83
SD30WC	83
SDS30WC	83

Gas Cooktops

SGSXP365TS	98
SGSP365TS	98
SGSX365TS	98
SGS365TS	98
SGSXP305TS	98
SGSP305TS	98
SGSX305TS	98
SGS305TS	98

Induction Cooktops

★ CIT36YWB	99
★ CIT36YWBB	99
★ CIT367YGS	99
★ CIT367YG	99
★ CIT367YMS	99
★ CIT367YM	99
CIT365YB	99
★ CIT30YWBB	99
CIT304YM	99
CIT304YB	99

Electric Cooktops

CET366YB	100
CEM366TB	100
CET305YB	100
CEM305TB	100

Wall Hoods

★ PH60GWS	120
★ PH54GWS	120
★ PH48GWS	120
★ PH42GWS	120
★ PH36GWS	120
PH48HWS	120
PH36HWS	120
PH30HWS	120
★ HMWB36WS	120
★ HMWB30WS	120
★ HMWB481WS	120
★ HMWB361WS	120
★ HMDW36WS	120
★ HMDW30WS	120

Wall Chimney Hoods

HPCN48WS	120
HPCN36WS	120
★ HMCB36WS	120
★ HMCB30WS	120
★ HDDB36WS	120
★ HDDB30WS	120

Island Hoods

★ HPIN54WS	121
★ HPIN42WS	121
★ HMIB42WS	121
★ HMIB36WS	121

Downdraft Hoods

UCVP36XS	121
UCVM36XS	121
UCVM30XS	121

Custom Hood Inserts

★ VCIN60GWS	121
★ VCIN54GWS	121
★ VCIN48GWS	121
★ VCIN42GWS	121
★ VCIN36GWS	121
★ VCI3B36ZS	121
★ VCI3B30ZS	121
★ VCI6B36ZS	121
★ VCI6B30ZS	121

Fresh Food Columns

★ T23IR905SP	168
★ T24IR905SP	168
★ T30IR905SP	168
★ T36IR905SP	168

Freezer Columns

★ T18ID905LP	168
★ T18ID905RP	168
★ T24ID905LP	168
★ T24ID905RP	168
★ T18IF905SP	169
★ T24IF905SP	169
★ T30IF905SP	169
★ T36IF905SP	169

Wine Preservation Columns

★ T18IW905SP	169
★ T24IW905SP	169

Bottom Freezers

★ T30IB905SP	170
★ T36IB905SP	170
★ T36IT905NP	170
★ T36IT903NP	170
★ T30BB925SS	170
★ T36BB925SS	170
★ T36BT925NS	170
★ T30BB915SS	171
★ T36BB915SS	171
★ T36BT915NS	171
★ T36FT820NS	171
★ T36FT810NS	171

Under-Counter Refrigeration

T24UR925LS	172
T24UR925RS	172
T24UR915LS	172
T24UR915RS	172
T24UR905LP	172
T24UR905RP	172
T24UW925LS	172
T24UW925RS	172
T24UW915LS	172
T24UW915RS	172
T24UW905LP	172
T24UW905RP	172
T24UR925DS	173
T24UR915DS	173
T24UR905DP	173
T24UC925DS	173
T24UC915DS	173
T24UC905DP	173

Dishwashers

★ DWHD770CFP	236
★ DWHD770CFM	236
★ DWHD770CPR	236
★ DWHD760CFP	237
★ DWHD760CFM	237
★ DWHD760CPR	237
★ DWHD560CFP	237
★ DWHD560CFM	237
★ DWHD560CPR	237

Built-In Coffee Machines

★ TCM24PS	243
★ TCM24TS	243

Warranty

252

★ *Features Thermador Home Connect®*

Visit Thermador.com for complete specifications or text a Thermador model number to 21432 to have specs sent to your phone

Thermador

1 800 735 4328 | USA THERMADOR.COM | CANADA THERMADOR.CA

© 2023 BSH HOME APPLIANCES CORPORATION. ALL RIGHTS RESERVED.

MCG-DIGITAL 9/23