SIEMENS

# BUILT - IN GAS HOBS

# INSTALLATION AND OPERATION INSTRUCTION

en

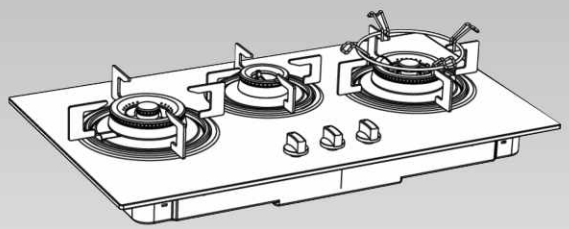

ER94331
ER94351

# Preface

Thanks for your choosing Siemens cooking appliances.

Please read this specification carefully before you use the product.

Any failure or loss derived from the improper use or installation different from that which is Stipulated in this user's manual is not covered by our product's warranty. Please keep all documents in a safe place for future reference. If you have any question, please contact Our local service center or Siemens dealer.

# Table of Contents


**Key Information**

Packaging of new hob • • • • • • • • • • • • • • • 2
Disposal of old hob • • • • • • • • • • • • • • • 2
Before using the new hob • • • • • • • • • • • • • 2

**Product Introduction**

Product specification • • • • • • • • • • • • • • • 3
Product features • • • • • • • • • • • • • • • • • 3

**Installation Instructions**

Placement location • • • • • • • • • • • • • • • • 5
Safety precautions • • • • • • • • • • • • • • • • 6
Countertop tapping • • • • • • • • • • • • • • • • 7
Connecting the gas pipeline • • • • • • • • • • • 8
Gas leak detection • • • • • • • • • • • • • • • • 9
Installing the electrical source • • • • • • • • • • 9
Installing the supports, caps and burners • • • • • 9

**Operation Instruction**

Getting familiar with your new hob • • • • • • • • 11
Safety precautions • • • • • • • • • • • • • • • • 13
Operation method • • • • • • • • • • • • • • • • 15
Flame power adjustment • • • • • • • • • • • • • 15

**Cleaning, Care and Maintenance**

Cleaning and maintaining your hob • • • • • • • • 16
Analysis and remedy of common trouble • • • • • 17

**Customer Service**

Tips with good intention • • • • • • • • • • • • • 18

# Key Information

## Packaging of the new hob

- All the packaging material are environmental friendly and recyclable. When you are disposing of these packaging materials, please do so in such a way that protects the environment and minimizes waste.
- Do not allow children to play with the thin film or packaging case to avoid suffocation or accidents.

## Disposal of the old hob

- The old hob should be taken to a recycling center where it can be disposed of in a way which protects the environment.
- Old hobs contain useful materials that can be recycled. Discarded old electrical appliances can be hazardous to the environment.

## Before using the new hob

- The gas hob is specially designed for the purpose of home cooking, so that it should be installed in the kitchen for personal use.
- If you find the hob is visibly damaged, do not connect it to the gas. Contact your local service center or dealer immediately.
- Please check the nameplate on your gas hob carefully, and make sure that the gas type you intend to use corresponds with that specified on the nameplate (which is located at back of the gas hob) .If you have any doubts, please contact our local service center.

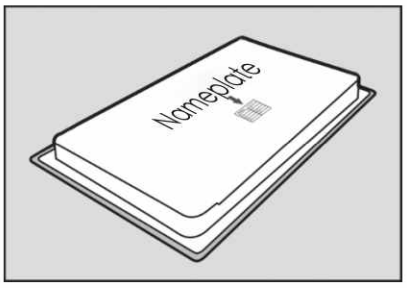


- Only technicians who have received professional training and have the proper qualifications for gas hob maintenance can perform the installation and maintenance of the gas hob.
- As the end-user, you are responsible for the regular maintenance and proper use of the gas hob.
- For confirming you can use the hob correctly and safety, please read the operation and installation instruction carefully accordingly.

# Product Introduction

## Production specification

ER94331

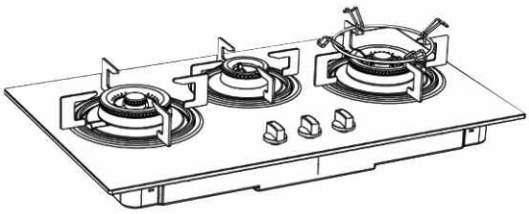

ER94351

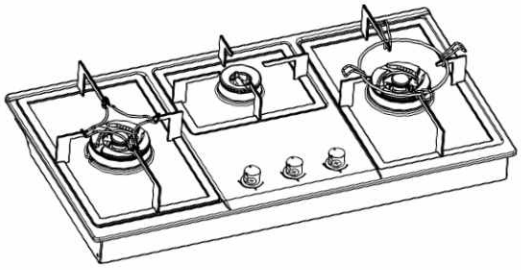

## Product features

- Safety design
  Each burner of this gas hob is equipped with a safety device for the quick cut-off of the gas.
  In the case of a flameout while you are cooking, the safety device will be engaged immediately to cut off the gas supply, thus avoiding any accidents.

- Personal-friendly design
  This product inherits and carries forward the precise processing and manufacturing techniques of Germany， as well as a human-oriented design concept. Besides the hobs' convenience and practicality, the gas hob also gives the user a sense of beauty.

## Product Introduction

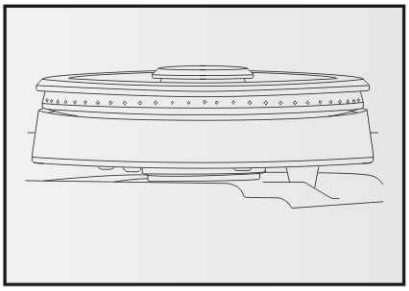

-Design One-Click™ (installation)
This novel method allow the burner head and pan support to be placed on the top of countertop, eliminating the ignition failure and the breaking of ignition electrode or a thermocouple positioned under the burner.

-Design EasyFix™ assembly method(snap spring installation)
Make it easier and simpler to install and disassemble the product. Please refer to the Countertop tapping on page7.

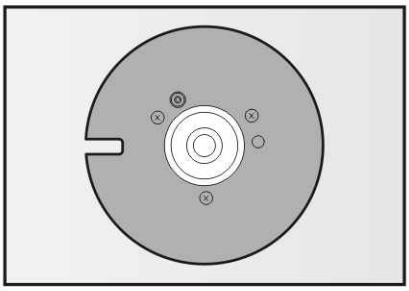

-The innovative closed top faceplate is formed through sealing the faceplate as a whole, and is assisted with an invisible foam seal (see the view of product bottom), which even under pressure at high temperatures has a high rebound property. This rebound property thus completely prevents the food residue from leaking into the countertop. This greatly shortens the time for daily cleaning and maintenance while also making the product operate consistently and safetly over a long period of time.

-Follow strictly the internal control design testing procedure, and repeat with multiple tests, to ensure that the product can stably operate in a wide range of settings. The product adopts the valve components that apply to the three gas types, in order to guarantee the optimal cooking flame.

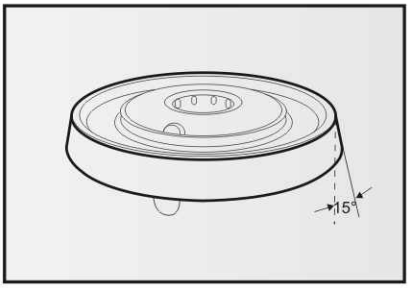


■ Western style appearance design
Form the burner with the steep skirts (the patented design of no ornament ring which is currently leading in China), the heavy supports made of enamel board, to the high quality control knobs, you can find a sense of simple dignity in every part of this western style Hob design.

# Installation Instruction

## Placement location

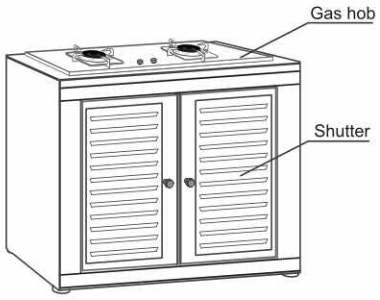


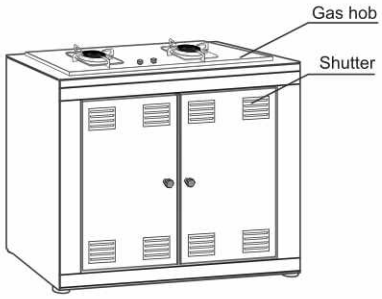


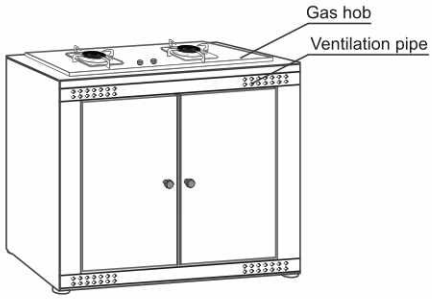


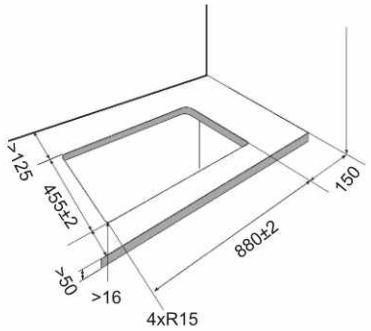


- The gas hob should only be installed in the home kitchen. Do not use it in other rooms.
- Do not place the gas hob in the bathroom, bedroom, basement, corrosive material in close proximity.
- Do not place flammable or explosive objects on or around the gas hob, e.g. curtains.
- If there are flammable material around the gas hob, e.g. wooden wall, low ceiling etc, then the gas hob should be installed at a distance of at least 150mm from the wooden wall, and at least 1m to the kitchen ceiling. Fire-proof material around the gas hob are not limited by this distance.
- The use of the gas hob will result in temperature rising and humidity increasing in the room where the hob is installed. Therefore, please ensure there is good ventilation openings. If the gas hob operates at a high flame for a long time , then good ventilation is required. To accomplish this ventilation, you may open a window, door, or use an efficient range hood with an exhaust fan.
- Installation of cooking appliances such as sterilizer cabinet, baking oven and microwave oven ect. must be made in strict accordance with the method described in instruction manual of corresponding appliance and ensure good ventilation of cupboard. If drawers are set under them, the drawers made of fireproof materials shall be used and no any mutual interference with gas connecting hose! Please do not put any heat-sensitive or flammable products under the drawers, e.g.; spraying agent or shoe polishing ect.
- If the gas hob is installed in a cupboard, the plastic cooking and adhesive bonded panel in it should be subjected to the fire-resistant glue treatment (heat resistant glue); otherwise, deformation or scaling of the surface-layers will likely result, especially on the sides of the cupboard.
- The gas hob should be installed on a solid, flat countertop.Countertop's minimum thickness should be more than 16mm.Countertop's minimum width should be more than 550mm, however the width of 600mm is recommended. For the size of the template provided with the gas hob.
- The cupboard should have a tapping size which meet the ventilation requirements and is open to the air. The stove ventilation pipe opening should be a minimum of 100cm$^2$. Otherwise , the lack of ventilation might cause an explosion resulting from the leakage of gas.

# Installation Instructions

## Safety precautions

- The installation, maintenance and gas replacement for the gas hob should be performed by the technicians with the proper qualification for gas maintenance.
- Before installation, please carefully check the nameplate on your gas hob. Make sure that the gas hob type specified on the nameplate (which is stuck to the back shell) is consistent with the gas that you are currently using. If you have any doubts on whether the gas you are using is consistent, please contact our local service center.
- Install a special gas valve between the indoor gas connecting hose and the gas hob, in order to switch on and off the gas. It should be installed in such a way that in the event an accident occurs during operation period, the user will be able to immediately shut of the gas. In addition, please ensure this gas valve can be accessed at all times.
- Please install the domestic range hood with an exhaust pipe in accordance with the local gas hob installation specification and guides. This type of range hood should have a distance of at least 750mm to the gas hob.
- The gas hob has already received a strict gas leakage performance test before leaving the factory. Do not dismantle the faceplate or inner parts during the installation of the gas hob, to avoid later gas poisoning and fire risk resulting from the gas leakage during the operation.
- Please ensure that when the installation is completed, the gas hose connected to the gas hob does not touch any movable object in the cupboard, e.g. drawer, roller etc.
- Please confirm the flashboard are safety and grounded.
- If your gas hob requires gas replacement, please contact our service center ( at least one week in advance), and we will make the proper adjustments to your gas hob as soon as possible.

  Or

  If you move house and intend to reinstall the gas hob to your new house, please check if the gas supply for your new house is consistent with the gas specified on the nameplate. If it is not consistent, then contact our local service center and we will make the proper adjustments to your gas hob as soon as possible.

# Installation Instruction

## Countertop tapping

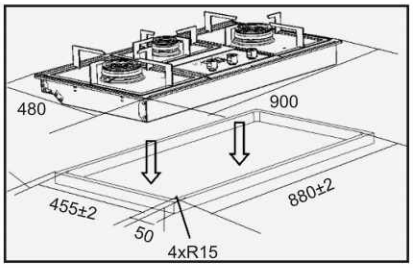


- Please perform the tapping on the countertop according to the tapping template (keeping to the installation size of all the five types of products). To ensure the proper connection of the gas hose, a space of at least 100mm height should be kept available below the gas hob.

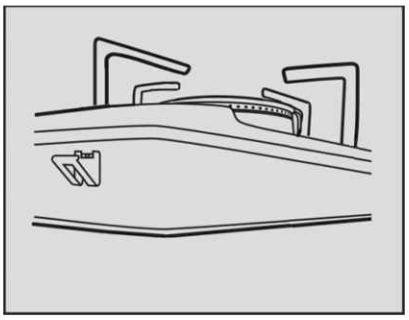

- To ensure the stable placement of the gas hob, please ensure that after the tapping, the vertical sides of the installation site are smooth.
- Follow the method shown in the illustration on the left and clamp the four spring sheets supplied with the product to the corresponding four installation positions on the back shell.
- After installing the spring sheets, push the entire gas hob firmly into the cutout opening in the countertop, until the outside rim of the gas hob is seated closely on the countertop.

# Installation Instructions

## Connecting the gas pipeline

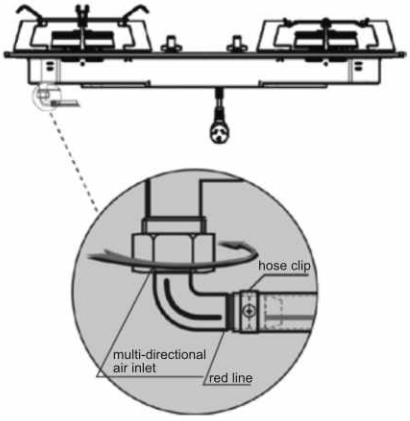


- The connection of the gas hob must be performed by a qualified technician, and it must conform with the legal provisions and connection requirement. The indoor gas hose behind the gas meter and the air inlet at the bottom of the gas hob should be connected with a metal bellows and a special rubber hose whose length should be connected with a metal bellows and a special rubber hose whose length should not exceed 1.5m.(Please refer to the appropriate requirements filed by the local gas management department. You can consult and purchase the special hose and hose clip at counters for gas products in hardware stores).

  We recommend you to use the metal bellows to attach the connecting hose. Especially, if the other appliances are installed under the hob such as a disinfecting cabinet, backing oven and microwave oven etc, a gas rubber hose must not be used for the gas connection.

  Using a gas rubber hose for the gas connection

-The multi-directional air inlet used for connecting the hose is provided in the packing case of gas hob.
-The two ends of the gas hose are connected to the gas hob and the indoor gas valve (the inside diameter of the gas hose is 9.5mm).
-When connecting the gas hose, you must insert the gas hose until it reaches the red line on the multi-directional air inlet, and secure it firmly in position with a hose clip.
-After the connection is completed, please make sure that the gas hose is not flattened, twisted or bent by any other objects. Then smear soap suds all over the hose connection part; and check each part of the connection hose carefully to see if there is any leakage.
-We recommend that you perform an airtight test for the gas hob periodically while it is in use, or else replace the gas hose annually.
-Do not leave the gas hose in a high temperature area or put it contact with any high temperature section of the gas hob.

# Installation Instructions

## Gas leak detection

■ Leak detection
Attention!
After he gas pipeline connection has been completed, the leak detection test must be performed.

Smear the suds on each connection part with a soft brush, and then pen the gas valve to check carefully if bubbles appear, please close the gas valve immediately, and adjust the air inlet connection until no bubbles appear.

## Installing the electrical source

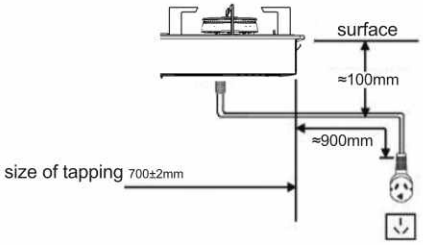


■ Installing the electrical source
Connection the electrical source
The electrical source is fixed in the middle of bottom, when you use it, please confirm it is safety and grounded.
Please confirm the hob wire are grounded, it is used attached a tri-pins, and the tri-pins are grounded, when it is creepage, the setting can prevent human from getting an electric shock.
We suggest the flashboard is fixed on the right underside, be far away from the gas and air inlet.

## Installing the supports, caps and burners

■ As shown in the below picture, please make sure that the knobs, burner heads, caps and supports have been installed correctly. Incorrect installation will seriously affect the normal use of the product and shorten its life-span.

When installing the supports and burners, the user should pay attention that the protruding objects on the bottom of the supports and burners are aligned with the stretching slot on the faceplate, which is used for maintenance. If you place the components randomly or rotate them for hob placement, the stainless steel faceplate may be scratched. The appearance damage of the gas hob resulting from such installation operations is not covered by our warranty.

## Installation Instructions

ER94331

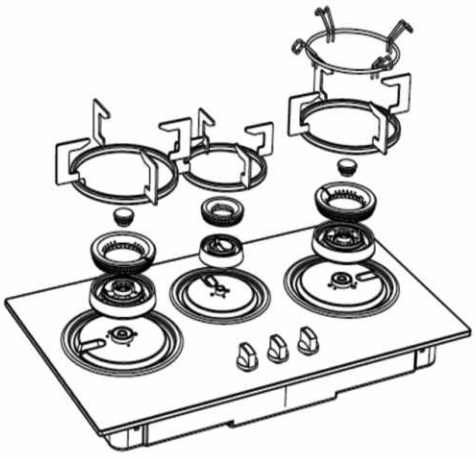

ER94351

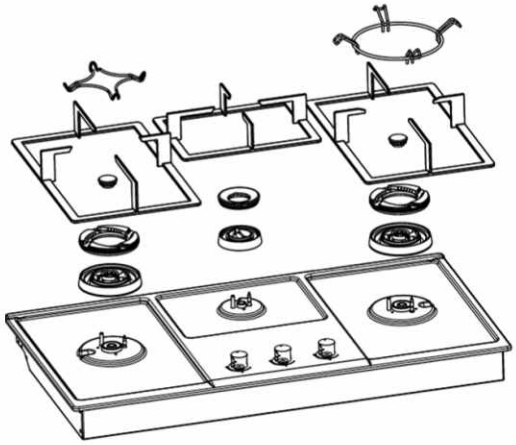

# Operation Instruction

## Getting familiar with your new hob

ER94331

- Top view of product

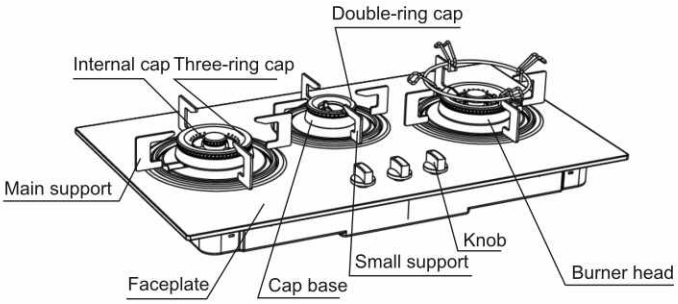


ER94351

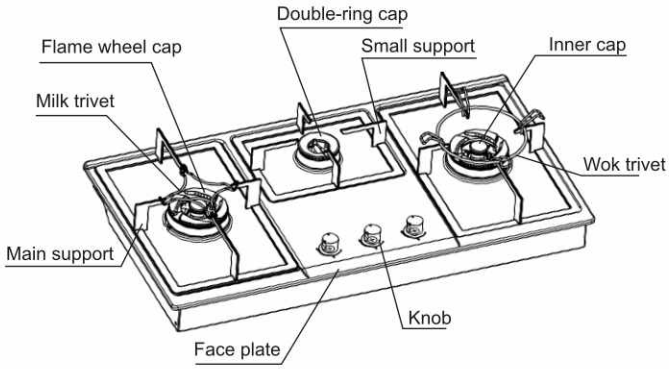


- Top view of Left burner

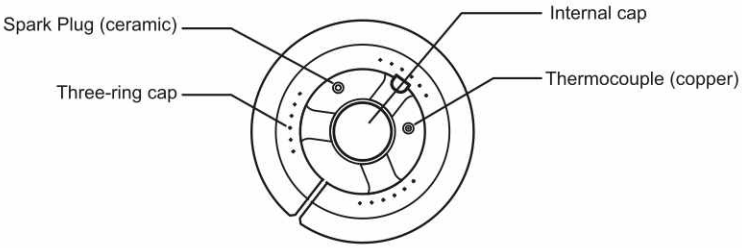


- Back view of product

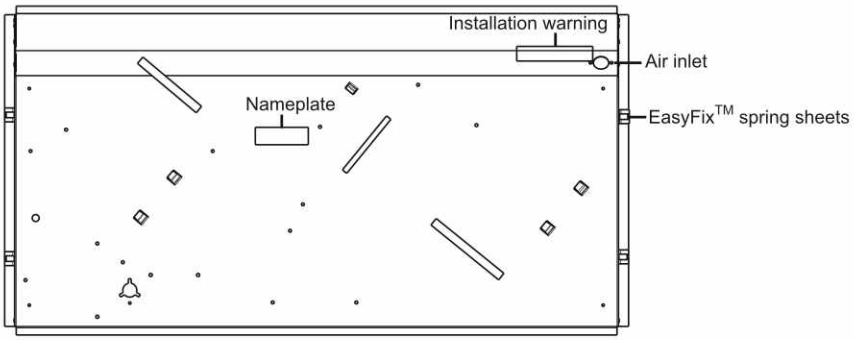

# Operation Instruction

| Product codes / Specifications | ER94331 | ER94351 |
|---|---|---|
| Product appearance | 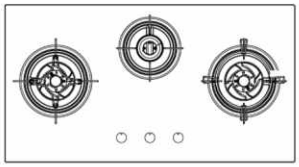 | 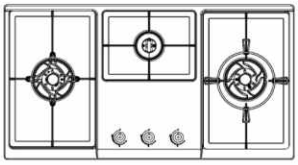 |
| Model | JZY-X2B3E40B | JZY-X23E40F |
| Appropriate gas | LPG | |
| Gas pressure kPa | 2.9 | |
| Heat load of burner kW | —— | |
| Rating heat input (left/right) kW | 4.0 | |
| Rating heat input (mid) kW | 1.7 | |
| Dimension (W x D x H) mm | 920 × 500 × 150 | 900 × 480 × 150 |
| Size of tapping (W x D) mm | (880 ± 2 × 455 ± 2) Fillet 4 × R15 | |
| Net weight kg | 22 | 17 |
| Gross weight kg | 25 | 20 |
| Power V | 220-240 | |

# Operation Instruction

## Safety precautions

Before first use

- Please clean the hob and its accessories thoroughly. This will remove the 'new' smell of the hob.
- Before using, ensure the gas pipeline, knob, burner heads and caps, and supports have been mounted correctly. Then, open the indoor gas valve.
- The first ignition (or ignition after it has been left unused for a long time) may be difficult, as there is residual air in the gas pipeline, it may be difficult to light the burner. This is a normal phenomenon. Please repeat the igniting operations, until the hob has ignited properly.

When in use:

- When cooking with the gas hob, do not leave it unattended. Be sure to turner it off completely before leaving the room.
- Gas Poisoning Warning!
  When using the hob, make sure to open the windows or turner on the exhaust fan of the range hood so as to keep good ventilation around the gas hob. The gas hob may cause carbon monoxide poisoning if you are using the gas hob in a closed kitchen with no ventilation for an extended time.
- Explosion Warning!
  If you detect a gas leakage while operating the Gas hob, you should turner off the indoor main gas valve immediately, and then open windows and doors for ventilation. Do not use matches or any lighters at this time. Creating a flame at this time may ignite the residual gas in the room and, cause an explosion. In the case of a leak, please contact our local service center immediately.
- Fire Warning!
  Do not ignite the gas hob for heating when no pan is placed on it or there is no food in the pan. This may cause the extraction hood over the gas hob to be damaged by overheating, or cause a fire if the residual grease in the extraction hood is ignited.
- Burner risk!
  Do not let unattended children use or stand next to the gas hob while it is in use. Once the gas hob has been turned off, it remains very hot and dangerous for several minutes. At this time to avoid burn injury, avoid touching the hot burners, supports and the faceplate around the burners with your hands or other part of your body.

# Operation Instruction

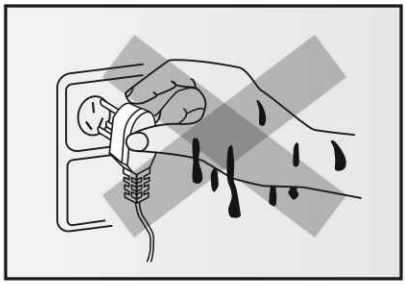

- When using the gas hob, please protect it from external air, which may cause uneven heating or even extinguish the flame.
- When cooking food with vegetable oil and animal fats, you should be careful to avoid fires caused by overheating oil in the pan.
- If fire is caused by overheated oil, immediately use an iron pot lid or other large metal object to cover the fire, in order to cut off the air needed for burning, and then turn off the indoor gas valve. In order to avoid accidents, never use water to put out oil or grease fire.
- When using the hob, please careful do not touch the heat thing. Do not put metallic thing on the hob. Ex. Knife, fork, scoop, lid…
- Whenever the burners is extinguished for any reason, you should turn it off and wait for at least 1 minute before re-igniting the burner.
- Please do not plug and pull out the flashboard when your hands are wet.
- Please do not draw the wire strongly when pulling the plug.

## Operation method

- Normal operation of gas hob should not cause any unusual noise. If you have any doubts, please contact our local service center.

After use:

- Remember to close the gas shut-off valve on the indoor pipeline, when you have finished using the gas hob.
- Using a pan with a thick base can improve heat distribution, especially for small flames when the gas is on a low setting. The higher efficiency of gas hob is achieved when the bigger size of pan is used. This can also save energy.
- Each time you move the pan away for a short time, turner the burner to the small-flame position or off. Even when you do other operations near the hob this is a good rule of thumb. Turning the flame down will also reduce the risk of burning, save gas, and reduce pollution.
- When you use a big stove, ensure there is a distance of at least 25mm between the stove and the surrounding combustible materials. In addition the distance between the knob and the stove should be at least 50mm.

# Operation Instruction

## Flame power adjustment

- To adjust the flame properly, refer to the following five-stage flame power indication chart and function descriptions. Select your flame as desired.

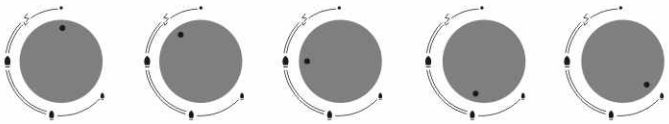

- To ignite the burner, when the knob is turned to OFF (0 degree), press it down and turn it to the ignition position (30-40 degrees counterclockwise). The flame of the internal ring should ignite; while the flame of the external ring is not yet ignited. Press the knob down, turn it and hold it down for 3-5 seconds before releasing. If the flame goes out after the release, return the knob to the vertical OFF (0 degree) position and repeat the above ignition operations.

- Special instructions:
  Do not ignite the gas hob for heating when no pan is placed on it or there is no food in the pan. This may cause the extraction hood over the gas hob be damaged by overheating, or cause a fire if the residual grease in the extraction hood is ignited.

  When the knob is turned counterclockwise from the maximum flame position (90 degrees) to the medium flame position (170 degrees), the small flame of the internal ring will remain unchanged, but the flame of the external ring will gradually be extinguished.

  When the knob is turned counterclockwise from the medium flame position (170 degrees) to the minimum flame position (230 degrees), the small flame of the internal ring will gradually be reduced to the lowest setting.

  The innovative 230-degree dial wide range of flame power adjustment ensures the flame power can be adjusted conveniently and accurately to suit your needs.

  After you are finished using the gas hob, please turn the knob clockwise to OFF (0 degree), the flame will then go out. For your safety, please close the gas valve on the indoor pipeline after using the gas hob.

# Cleaning and maintaining your hob

## Cleaning and maintaining your hob

- Before cleaning the gas hob, you must switch of the indoor gas valve, and wait until the gas hob has cooled. When cleaning, do not dismantle the safety device or sealed parts of the hob.
- Clean the pan supports of the gas hob
  Clean the pan supports with soft gauze, a solution of cleanser and hot water.

  Do not use a granular cleanser (decontamination powder) or steel wool to clean the faceplate. These may cause scratches on the surface of the hob.
- Clean the burners of the gas hob
  Please use soft gauze and soap suds (or special cleansers) to clean and maintain the hob faceplate. If you want to remove the fingerprints left on the stainless steel surface, you should use a 3M cleanser. It is best not to use a chloride-based cleanser to clean the glass.
  Do not use a granular cleanser (decontamination power) or steel wool to clean the faceplate. These may cause scratches on the surface of the hob.
- Clean the caps of the gas hob (recommended frequency: cleaning at least once a month)
  When you are using the hob, you may find the flame is not uniform or some burner openings have no flame. In such cases, after the hob has cooled, you should take off the cap and use an iron slice and steel needle to remove the dirt and carbon blocking the burner openings. As shown in the picture, please make sure that burner heads and caps have been installed correctly.
  Do not wash the cap directly with water (as the bubbles may temporarily block the fire holes). Do not use a hard object to wipe the burner surface with an inorganic water-based and temperature-resistant coating, which could result in permanent damage to the black surface.
  Attention: When dismantling the cap parts prior to cleaning and re-assembling them after cleaning, take care when touching the ignition needle as it is made of ceramic material which can be easily damaged.
- After cleaning is complete, please re-install the support, burner heads and caps in accordance with the illustration (page 10). Any permanent scratches on the top sheet surface caused by incorrect installation are not covered by the warranty.

  Once the surfaces of the products are cleaned, please ensure they are put back correctly, otherwise the electronic ignition devices may not work normally. The heads and caps should be dried completely prior to putting them back.
  Pan supports must be dried completely prior to putting them back in.

please make sure that burner heads and caps have been installed correctly.

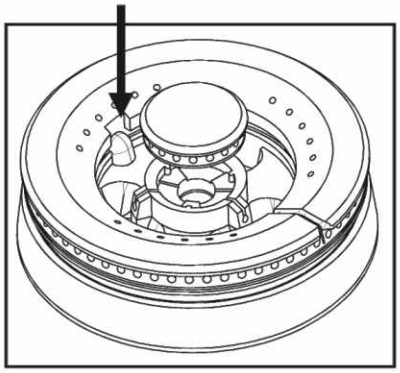

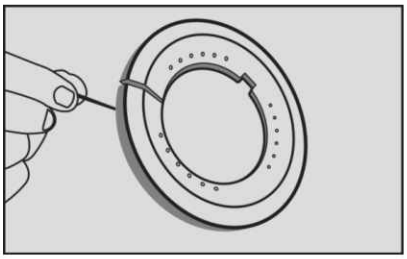

# Analysis and remedy of common trouble

| Symptom | Cause | | Solution |
|---|---|---|---|
| Ignition electrode does not spark | Electrical source | The source not installed, poor contact. | Re-install correctly |
| | Burner | Not installed properly | Re-install correctly |
| | Ignition electrode | Ignition electrode and ignition position are aligned | Adjust discharge distance to 3-4 mm |
| | | The ignition is wet, especially in the rainy season; or due to food overflows | Use a dry, soft cloth to dry the ignition electrode |
| Flame goes old when the ignition knob is released | Safety valve | The pressing and holding time was too short for the safety solenoid valve to work properly | Ignite again and hold the knob down for 3-5 seconds after the flame has ignited |
| When you are using the pulse ignition, the hob is not ignited or has difficulty igniting | Gas valve | Not open or not completely open | Ensure the gas valve is fully open |
| | Gas pipeline | There is air in the gas pipeline | Ignite repeatedly until the flame has ignited |
| | Burner | Caps or other components are not installed correctly | Re-install correctly |
| | Burner | The burner holes on the cap are blocked so that the gas cannot flow out normally | Clean the dirt out of the burner holes |
| | Ignition electrode | It is wet, or dirty due to the overflowing food | Dry the ignition electrode and remove any dirt |
| | Gas connecting hose | The gas hose is flattened or blocked | Adjust or replace the gas connecting hose |
| A loud noise when igniting/burner | Cap | Not installed properly | Re-install correctly |
| Flame out when using | Thermal couple | The protection sensor is dirty | Clean thermal couple |
| | | The fitting position deviates from the small flame range | Adjust the position of thermal couple properly |
| | Electrical source | Was shut off | Switch on electrical source |
| Short and weak flame | Gas source | Gas in gas cylinder is used up; the opening angle of the pressure reducing valve is too small; otherwise there is a problem with the gas pressure in the pipeline | Replace the gas cylinder or adjust the pressure reducing valve |
| Long and yellow flames | Cap | Some flame holes are blocked | Clean out the dirt in the flame holes |
| Unstable burning | Cap | Not installed properly | Re-install correctly |
| Smell | Leakage | The gas rubber hose is aging, cracked, fractured or falling off | Replace the gas connecting hose |
| | | The main burner is not igniting | Re-ignite after the smell disappears. |
| Can not ignite and buzzer beep alarm signal | The station of knob is not right | | Re-adjust the knob station |

# Customer Service

## Tips with good intention

- Danger！！！
  Only technicians that have received professional training and have a qualification for gas hob maintenance may carry out maintenance operations for the gas hob. No other person should maintain the gas hob, to avoid serious consequences.

- When your gas hob is malfunctioning, before contacting our customer service, please refer to “Analysis and Remedy of Common Trouble” first. If technicians visit your house and find there is nothing wrong with your gas hob, you will have to pay the relevant cost, even if it is during the warranty period.

- If you cannot find solution to a problem, turn off the gas valve and contact our customer service center.

- When you contact our customer service, please state the product code(E-Number), the production date(FD)and the serial number(Serial No.). These information can help us to offer better service, and save you unnecessary cost. You will find this information on the nameplate of the gas hob, as illustrated below.

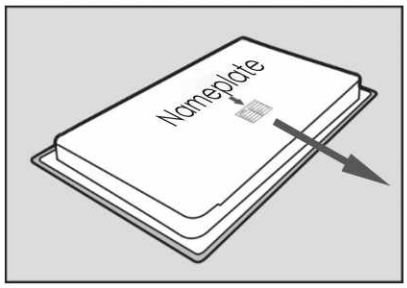


| |
|---|
| E-Number |
| FD |
| Serial No. |

Material Number: 9000686028

Version: 03

Production License Code: XK21-007-00819

**Guarantee:** The guarantee conditions for this appliance are as defined by our representative in the country in which it is sold. Details regarding these conditions can be obtained from the dealer from whom the appliance was purchased. The bill of sale or receipt must be produced when making any claim under the terms of this guarantee.