SIEMENS

Fridge-freezer

KI..N..

siemens-home.bsh-group.com/welcome

en Instruction for Use

Register your product online

en Table of Contents

Safety and warning information 3
Information concerning disposal 5
Scope of delivery 6
Ambient temperature and ventilation 6
Installation location 7
Connecting the appliance 7
Getting to know your appliance 8
Switching the appliance on 9
Setting the temperature 9
Alarm functions 10
Usable capacity 10
Refrigerator compartment 10
Super cooling 11
Freezer compartment 11
Max. freezing capacity 12
Freezing and storing food 12
Freezing fresh food 13
Super freezing 14
Thawing frozen food 14
Interior fittings 14
Sticker “OK” 15
Switching off and disconnecting the appliance 16
Defrosting 16
Cleaning the appliance 16
Odours 18
Light (LED) 18
Tips for saving energy 18
Operating noises 19
Eliminating minor faults yourself 19
Customer service 21

Safety and warning information

Before you switch ON the appliance

Please read the operating and installation instructions carefully! They contain important information on how to install, use and maintain the appliance.

The manufacturer is not liable if you fail to comply with the instructions and warnings. Retain all documents for subsequent use or for the next owner.

Technical safety

The appliance contains a small quantity of environmentally friendly but flammable refrigerant R600a. Ensure that the tubing of the refrigerant circuit is not damaged during transportation and installation. Leaking refrigerant may cause eye injuries or ignite.

If damage has occurred

- Keep naked flames and/or ignition sources away from the appliance,
- thoroughly ventilate the room for several minutes,
- switch off the appliance and pull out the mains plug,
- inform customer service.

The more refrigerant an appliance contains, the larger the room must be in which the appliance is situated. Leaking refrigerant can form a flammable gas-air mixture in rooms which are too small. The room must be at least 1 m^3 per 8 g of refrigerant. The amount of refrigerant in your appliance is indicated on the rating plate inside the appliance.

If the power cord of this appliance is damaged, it must be replaced by the manufacturer, customer service or a similarly qualified person. Improper installations and repairs may put the user at considerable risk.

Repairs may be performed by the manufacturer, customer service or a similarly qualified person only.

Only original parts supplied by the manufacturer may be used. The manufacturer guarantees that only these parts satisfy the safety requirements.

A extension cable may be purchased from customer service only.

Important information when using the appliance

- Never use electrical appliances inside the appliance (e.g. heater, electric ice maker, etc.). Explosion hazard!
- Never defrost or clean the appliance with a steam cleaner! The steam may penetrate electrical parts and cause a short-circuit. Risk of electric shock!
- Do not use pointed or sharp-edged implements to remove frost or layers of ice. You could damage the refrigerant tubes. Leaking refrigerant may cause eye injuries or ignite.
- Do not store products which contain flammable propellants (e.g. spray cans) or explosive substances in the appliance. Explosion hazard!
- Do not stand on or lean heavily against base of appliance, drawers or doors, etc
- For defrosting and cleaning, pull the mains plug out or switch off the fuse. Do not pull out the mains plug by tugging on the power cord.
- Store high-percentage alcohol tightly closed and standing up.
- Keep plastic parts and the door seal free of oil and grease. Otherwise, parts and door seal will become porous.
- Never cover or block the ventilation openings of the appliance!
- **Avoiding placing children and vulnerable people at risk:**

  At risk are children, people who have limited physical, mental or sensory abilities, as well as people who have inadequate knowledge concerning safe operation of the appliance.

  Ensure that children and vulnerable people have understood the hazards.

  A person responsible for safety must supervise or instruct children and vulnerable people who are using the appliance.

  Only children from 8 years and above may use the appliance.

  Supervise children who are cleaning and maintaining the appliance.

  Never allow children to play with the appliance.

- Do not store bottled or canned drinks (especially carbonated drinks) in the freezer compartment. Bottles and cans may burst!
- Never put frozen food straight from the freezer compartment into your mouth.
  Risk of low-temperature burns!
- Avoid prolonged touching of frozen food, ice or the evaporator pipes, etc.
  Risk of low-temperature burns!

Children in the household

- Keep children away from packaging and its parts.
  Danger of suffocation from folding cartons and plastic film!
- Do not allow children to play with the appliance!
- If the appliance features a lock:
  keep the key out of the reach of children!

General regulations

The appliance is suitable

- for refrigerating and freezing food,
- for making ice.

This appliance is intended for use in the home and the home environment.

The appliance is suppressed according to EU Directive 2004/108/EC.

The refrigeration circuit has been checked for leaks.

This product complies with the relevant safety regulations for electrical appliances (EN 60335-2-24).

This appliance is intended for use up to a maximum height of 2000 metres above sea level.

Information concerning disposal

♻ Disposal of packaging

The packaging protects your appliance from damage during transit. All utilised materials are environmentally safe and recyclable. Please help us by disposing of the packaging in an environmentally friendly manner.

Please ask your dealer or inquire at your local authority about current means of disposal.

♻ Disposal of your old appliance

Old appliances are not worthless rubbish! Valuable raw materials can be reclaimed by recycling old appliances.

This appliance is labelled in accordance with European Directive 2012/19/EU concerning used electrical and electronic appliances (waste electrical and electronic equipment - WEEE). The guideline determines the framework for the return and recycling of used appliances as applicable throughout the EU.

⚠ Warning

Redundant appliances

1. Pull out the mains plug.
2. Cut off the power cord and discard with the mains plug.
3. Do not take out the trays and receptacles: children are therefore prevented from climbing in!
4. Do not allow children to play with the appliance once it has spent its useful life. Danger of suffocation!

Refrigerators contain refrigerant and gases in the insulation. Refrigerant and gases must be disposed of professionally. Ensure that tubing of the refrigerant circuit is not damaged prior to proper disposal.

Scope of delivery

After unpacking all parts, check for any damage in transit.

If you have any complaints, please contact the dealer from whom you purchased the appliance or our customer service.

The delivery consists of the following parts:

- Built-in appliance
- Interior fittings (depending on model)
- Bag containing installation materials
- Operating instructions
- Installation manual
- Customer service booklet
- Warranty enclosure
- Information on the energy consumption and noises

Ambient temperature and ventilation

Ambient temperature

The appliance is designed for a specific climate class. Depending on the climate class, the appliance can be operated at the following temperatures.

The climate class can be found on the rating plate. Fig. 11

Climate class	Permitted ambient temperature
SN	+10 °C to 32 °C
N	+16 °C to 32 °C
ST	+16 °C to 38 °C
T	+16 °C to 43 °C

Note

The appliance is fully functional within the room temperature limits of the indicated climatic class. If an appliance of climatic class SN is operated at colder room temperatures, the appliance will not be damaged up to a temperature of +5 °C.

Ventilation

Fig. 1/23

The refrigeration unit is ventilated only via the ventilation grille in the base. Never cover the ventilation grille or place anything in front of it. Otherwise the refrigeration unit must work harder, increasing the power consumption.

Installation location

Install the appliance in a dry, well ventilated room. The installation location should neither be exposed to direct sunlight nor near a heat source, e. g. a cooker, radiator, etc. If installation next to a heat source is unavoidable, use a suitable insulating plate or observe the following minimum distances to a heat source:

- 3 cm to electric or gas cookers.
- 30 cm to an oil or coal-fired cooker.

Connecting the appliance

After installing the appliance, wait at least 1 hour until the appliance is switched on. During transportation the oil in the compressor may have flowed into the refrigeration system.

Before switching on the appliance for the first time, clean the interior of the appliance (see chapter “Cleaning the appliance”).

Electrical connection

The socket must be near the appliance and also freely accessible following installation of the appliance.

The appliance complies with the protection class I. Connect the appliance to 220–240 V/50 Hz alternating current via a correctly installed socket with protective conductor. The socket must be fused with a 10 to 16 A fuse.

For appliances operated in non-European countries, check whether the stated voltage and current type match the values of your mains supply. This information can be found on the rating plate. Fig. 11

Warning

Never connect the appliance to electronic energy saver plugs.

Our appliances can be used with mains and sine-controlled inverters. Mains-controlled inverters are used for photovoltaic systems which are connected directly to the national grid. Sine-controlled inverters must be used for isolated applications (e.g. on ships or in mountain lodges) which are not connected directly to the national grid.

Getting to know your appliance

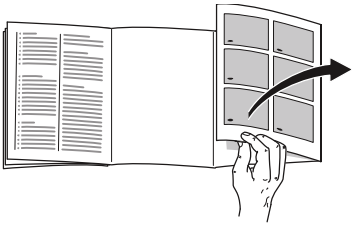

Please fold out the illustrated last page. These operating instructions refer to several models.

The features of the models may vary.

The diagrams may differ.

Fig. 1

* Not all models.

A	Refrigerator compartment
B	Freezer compartment
1-7	Controls
8	On/Off button
9	Light, refrigerator compartment
10	Glass shelf “EasyLift”
11*	Fixed glass shelf
12	Delicatessen container
13	Vegetable container
14	Butter and cheese compartment
15	Egg rack
16	Door shelf “EasyLift”
17	Bottle holder
18	Shelf for large bottles
19*	Berry tray
20	Frozen food container (small)
21	Glass shelf
22	Frozen food container (large)
23	Ventilation opening

Controls

Fig. 2

1 **Alarm button**
Used to switch off the warning signal, see chapter “Alarm function”.

2 **“Super” button (freezer compartment)**
Switches super freezing on and off.

3 **Temperature selection button freezer compartment**
The button sets the temperature in the freezer compartment.

4 **Temperature display freezer compartment**
The numbers correspond to the set freezer compartment temperatures in °C.

5 **“Super” button refrigerator compartment**
Switches super cooling on and off.

6 **Refrigerator compartment temperature selection button**
The button sets the temperature in the refrigerator compartment.

7 **Temperature display refrigerator compartment**
The numbers correspond to the set refrigerator compartment temperatures in °C.

Switching the appliance on

1. Switch on the appliance with the On/ Off button, Fig. 1/8.

   A warning signal sounds, the temperature displays, Figs. 2/4 and 7, flash, the alarm button, Fig. 2/1, is lit.

2. Press the alarm button Fig. 2/1.

   The warning signal is switched off, the appliance starts to cool. The alarm button is lit and the temperature displays flash until the set temperatures have been reached.

When the door is open, the light in the refrigerator compartment is lit.

The factory has recommended the following temperatures:

- Refrigerator compartment: +4 °C
- Freezer compartment: -18 °C

Operating tips

- After the appliance has been switched on, it may take several hours until the set temperature has been reached. Do not put any food in the appliance beforehand.
- The fully automatic NoFrost system ensures that the freezer compartment remains free of ice. Defrosting is not required.
- The sides of the housing are sometimes heated slightly. This prevents condensation in the area of the door seal.
- If the freezer compartment door cannot be immediately re-opened after it has been closed, wait until the resulting low pressure has equalised.

Setting the temperature

Fig. 2

Refrigerator compartment

The temperature can be set from +2 °C to +8 °C.

Keep pressing temperature setting button on refrigerator compartment 6, until the required refrigerator compartment temperature is set.

The value last selected is saved. The set temperature is indicated on the temperature display for the refrigerator compartment 7.

Freezer compartment

The temperature can be set from –16 °C to –24 °C.

Keep pressing temperature setting button freezer compartment 3 until the required freezer compartment temperature is set.

The value last selected is saved. The set temperature is indicated on temperature display for the freezer compartment 4.

Alarm functions

Fig. 2

Door alarm

The door alarm (continuous sound) switches on if the appliance door is open for longer than one minute. Close the door to switch off the warning signal.

Temperature alarm

The temperature alarm switches on if the freezer compartment is too warm:

- Alarm button 1 flashes, temperature display 4 is lit: the frozen food is or was at risk of thawing in the past.
- Alarm button 1 flashes, temperature display 4 flashes: the frozen food is at risk of thawing.
- Alarm button 1 is lit, temperature display 4 flashes: the frozen food is not at risk of thawing.

Note

Do not refreeze thawing or thawed food. Only ready meals (boiled or fried) may be refrozen.

No longer store the frozen produce for the max. storage period.

The alarm may switch on without any risk to the frozen food:

- when the appliance is switched on,
- when large quantities of fresh food are placed in the appliance,
- if the freezer compartment door is open too long.

Switching off the alarm

Fig. 2
Press the alarm button 1 to switch off the warning signal.

Usable capacity

Information on the usable capacity can be found inside your appliance on the rating plate. Fig. 11

Fully utilising the freezer volume

The maximum amount of food can be placed in the freezer by removing all fittings. The food can be stacked directly on the shelves and in the bottom of the freezer compartment.

Removing the fittings
Pull out the frozen food container all the way, lift at the front and remove. Fig. 3

Note

To insert the frozen food container with telescopic rails, the rails must be pulled out.

Refrigerator compartment

The refrigerator compartment is the ideal storage location for meat, sausage, fish, dairy products, eggs, ready meals and pastries.

Storing food

- Store fresh, undamaged food. The quality and freshness will then be retained for longer.
- In the case of ready-made products and bottled goods, observe the best-before date or use-by date specified by the manufacturer.

- To retain aroma, colour and freshness, pack or cover food well before placing in the appliance. This will prevent the transfer of flavours and the discolouration of plastic parts in the refrigerator compartment.
- Allow warm food and drinks to cool down before placing in the appliance.

Note

Avoid contact between food and rear panel. Otherwise the air circulation will be impaired.

Food or packaging could freeze to the rear panel.

Note the chill zones in the refrigerator compartment

The air circulation in the refrigerator compartment creates different chill zones:

- Coldest zone is between the arrow stamped on the side and the base of the refrigerator compartment. Fig. 4

  Note

  Store perishable food (e.g. fish, sausage, meat) in the coldest zone.
- Warmest zone is at the very top of the door.

  Note

  Store e.g. hard cheese and butter in the warmest zone. Cheese can then continue to release its flavour and the butter will still be easy to spread.

Super cooling

Super cooling sets the refrigerator temperature to the coldest temperature setting for approx. 6 hours. Then the appliance automatically switches to the temperature set prior to super cooling mode.

Switch on super cooling mode, e.g.

- before placing large quantities of food in the refrigerator compartment.
- for the fast cooling of drinks.

Switching on and off

Fig. 2

Press super button 5 refrigerator compartment.

The button is lit when super cooling is switched on.

Note

When super cooling is switched on, increased operating noises may occur.

Freezer compartment

Use the freezer compartment

- To store deep-frozen food.
- To make ice cubes.
- To freeze food.

Note

Ensure that the freezer compartment door has been closed properly. If the door is open, the frozen food will thaw. The freezer compartment will become covered in thick ice. Also: waste of energy due to high power consumption!

Max. freezing capacity

Information about the max. freezing capacity within 24 hours can be found on the rating plate. Fig. 11

Prerequisites for max. freezing capacity

- Switch on super freezing before placing fresh products in the compartment (see chapter entitled “Super freezing”).
- Removing the fittings
- The food can be stacked directly on the shelves and in the bottom of the freezer compartment.

  Note

  Do not cover the ventilation slots on the rear panel with frozen food.
- Freeze large quantities of food preferably in the very top compartment where food freezes particularly quickly and therefore also gently.

Freezing and storing food

Purchasing frozen food

- Packaging must not be damaged.
- Use by the “use by” date.
- Temperature in the supermarket freezer must be -18 °C or lower.
- If possible, transport deep-frozen food in an insulated bag and place quickly in the freezer compartment.

Note when loading products

- Preferably freeze large quantities of food in the top compartment, where food freezes particularly quickly and therefore also gently.
- Place the food over the whole area of the compartments or the frozen food containers.

  Note

  Food which is already frozen must not come into contact with the food which is to be frozen. If required, move the frozen food to other frozen food containers.

Storing frozen food

Insert frozen food container all the way to ensure unrestricted air circulation.

Freezing fresh food

Freeze fresh and undamaged food only.

To retain the best possible nutritional value, flavour and colour, vegetables should be blanched before freezing. Aubergines, peppers, zucchini and asparagus do not require blanching.

Literature on freezing and blanching can be found in bookshops.

Note

Keep food which is to be frozen away from food which is already frozen.

- The following foods are suitable for freezing:
  Cakes and pastries, fish and seafood, meat, game, poultry, vegetables, fruit, herbs, eggs without shells, dairy products such as cheese, butter and quark, ready meals and leftovers such as soups, stews, cooked meat and fish, potato dishes, soufflés and desserts.
- The following foods are not suitable for freezing:
  Types of vegetables, which are usually consumed raw, such as lettuce or radishes, eggs in shells, grapes, whole apples, pears and peaches, hard-boiled eggs, yoghurt, soured milk, sour cream, crème fraîche and mayonnaise.

Packing frozen food

To prevent food from losing its flavour or drying out, place in airtight containers.

1. Place food in packaging.
2. Remove air.
3. Seal the wrapping.
4. Label packaging with contents and date of freezing.

Suitable packaging:
Cling wrap, tubular film made of polyethylene, aluminium foil, freezer containers.
These products are available from specialist outlets.

Unsuitable packaging:
Wrapping paper, greaseproof paper, cellophane, bin liners and used shopping bags.

Items suitable for sealing packaged food:
Rubber bands, plastic clips, string, cold-resistant adhesive tape, etc.

Bags and tubular film made of polyethylene (PE) can be sealed with a film heat sealer.

Shelf life of frozen food

Storage duration depends on the type of food.

At a temperature of -18 °C:

- Fish, sausage, ready meals and cakes and pastries:

  up to 6 months
- Cheese, poultry and meat:

  up to 8 months
- Vegetables and fruit:

  up to 12 months

Super freezing

Food should be frozen solid as quickly as possible in order to retain vitamins, nutritional value, appearance and flavour.

Several hours before placing fresh food in the freezer compartment, switch on super freezing to prevent an unwanted temperature rise.

As a rule, 4–6 hours is adequate.

This appliance runs constantly and the freezer compartment drops to a very low temperature.

If the max. freezing capacity is to be used, super freezing must be switched on for 24 hours before the fresh produce is placed in the freezer compartment.

You can place smaller quantities of food (up to 2 kg) in the top compartment without super freezing.

Note

When super freezing is switched on, increased operating noises may occur.

Switching on and off

Fig. 2

Press “super” button freezer compartment 2.

If the super freezing has been switched on the button is lit.

Super freezing automatically switches off after approx. 2½ days.

Thawing frozen food

Depending on the type and application, select one of the following options:

- at room temperature
- in the refrigerator
- in an electric oven, with/without fan assisted hot-air
- in the microwave

Caution

Do not refreeze thawing or thawed food. Only ready meals (boiled or fried) may be refrozen.

No longer store the frozen produce for the max. storage period.

Interior fittings

(not all models)

Glass shelf “EasyLift”

Fig. 5

The height of the glass shelf can be adjusted without taking it out.

Pull right lever to move the shelf upwards. Pull left lever to move the shelf downwards.

Notes

- Only ever press one lever.
- If a load exceeds 5 kg, the position of the shelf can no longer be changed.

Door shelf “EasyLift”

Fig. 6
The height of the door shelves can be adjusted without taking them out.

Simultaneously press up the buttons on the underside of the door shelves to move the door shelves downwards. They can be moved upwards without pressing the buttons.

Fixed glass shelf

Fig. 7
To change the position of the fixed glass shelf, press buttons on the underside and detach the glass shelf from the fixing. Reposition stopper. Re-insert glass shelf and fix by applying light pressure.

Bottle shelf

Fig. 8
Bottles can be stored securely on the bottle shelf. The holder can be adjusted.

Ice cube tray

1. Fill the ice cube tray ¾ full of drinking water and place in the freezer compartment.
2. If the ice cube tray is stuck to the freezer compartment, loosen with a blunt implement only (spoon-handle).
3. To loosen the ice cubes, twist the ice cube tray slightly or hold briefly under flowing water.

Ice block

If a power failure or malfunction occurs, the ice blocks can be used to slow down the thawing process. The longest storage time is obtained by placing the ice pack on the food in the top compartment.

The ice blocks can also be used to cool food temporarily , e. g. in a cold bag.

Sticker “OK”

(not all models)

The “OK” temperature monitor can be used to determine temperatures below +4 °C. Gradually reduce the temperature if the sticker does not indicate “OK”.

Note

When the appliance is switched on, it may take 12 hours until the temperature is reached.

Correct setting

Switching off and disconnecting the appliance

Switching off the appliance

Fig. 1

Press the On/Off button 8.
Refrigerating unit and light switch off.

Disconnecting the appliance

If you do not use the appliance for a prolonged period:

1. Switch off the appliance.
2. Pull out mains plug or switch off fuse.
3. Clean the appliance.
4. Leave the appliance door open.

Defrosting

Refrigerator compartment

While the appliance is running, condensation droplets or frost form on the rear panel of the refrigerator compartment. As the rear panel defrosts automatically, it is not necessary to remove the frost or the condensation droplets. The condensation runs through the condensation channel and the drainage hole to the evaporation pan where it evaporates.

Note

Keep the condensation channel and drainage hole clean, so the condensation can drain off. Fig. 9

Freezer compartment

The fully automatic NoFrost system ensures that the freezer compartment remains free of ice. Defrosting is no longer required.

Cleaning the appliance

⚠ **Caution**

- Do not use abrasive, chloride or acidic cleaning agents or solvents.
- Do not use scouring or abrasive sponges. The metallic surfaces could corrode.
- Never clean shelves and containers in the dishwasher. The parts may become deformed!

Proceed as follows:

1. Before cleaning: Switch off the appliance.
2. Pull out mains plug or switch off fuse.
3. Take out the food and store in a cool location. Place ice pack (if available) on the food.
4. Wait until the layer of frost has thawed.
5. Clean the appliance with a soft cloth, lukewarm water and a little pH neutral washing-up liquid. The rinsing water must not run into the light or through the drainage hole into the evaporation pan.
6. Wipe the door seal with clear water only and then wipe dry thoroughly.
7. After cleaning reconnect and switch the appliance back on.
8. Put the food back into the appliance.

Notes

- Regularly clean the condensation channel and drainage hole, Fig. 9/B, with a cotton bud to ensure that the condensation can drain. The water conduction channel, Fig. 9/A, can be taken out for cleaning.
- After cleaning, the stopper must be re-inserted into the drainage hole of the refrigerator compartment for functional reasons.

Interior fittings

All variable parts of the appliance can be taken out for cleaning.

Taking out the glass shelf “EasyLift”
Fig. 5

Move glass shelf all the way upwards and take out.

Taking out the door shelf “EasyLift”
Fig. 6

Move door shelf all the way upwards and take out.

Taking out the fixed glass shelf
Fig. 7

Press buttons on the underside and detach from the fixing.

Taking out the frozen food container
Fig. 3

Pull out the frozen food container all the way, lift at the front and remove.

Note

Before inserting the frozen food container with telescopic rails, remove the latter.

Take glass shelves out of the freezer compartment
Lift shelf at the front and take out.

Removing the container
Fig. 10
Tilt container forwards and take out.

To insert the container, place the front of the container on the telescopic rails and push into the appliance.
The container is engaged by pushing it into the appliance.

Remove telescopic rails
Fig. 12

1. Pull out the telescopic rail.
2. Push lock in the direction of the arrow.
3. Detach telescopic rail from the rear pin.
4. Push telescopic rail together, push backwards above the rear pin and disengage.

Installing telescopic rails

1. Place the extended telescopic rail on the front pin.
2. Pull the telescopic rail forwards slightly until it engages.
3. Place telescopic rail on the rear pin.
4. Push lock backwards.

Odours

If you experience unpleasant odours:

1. Switch off the appliance with the On/ Off button. Fig. 1/8
2. Take all food out of the appliance.
3. Clean interior (see chapter “Cleaning the appliance”).
4. Clean packages.
5. Seal strong smelling food in order to avoid odours from forming.
6. Switch the appliance on again.
7. Store food in the appliance.
8. Check whether the formation of odours is still occuring after 24 hours.

Light (LED)

Your appliance features a maintenance-free LED light.

These lights may be repaired by customer service or authorised technicians only.

Tips for saving energy

- Install the appliance in a dry, well ventilated room! The appliance should not be installed in direct sunlight or near a heat source (e.g. radiator, cooker).

  If required, use an insulating plate.
- Allow warm food and drinks to cool down before placing in the appliance.
- Thaw frozen food in the refrigerator compartment and use the low temperature of the frozen food to cool refrigerated food.
- Open the appliance as briefly as possible.
- The ice packs slow down the thawing process of the frozen food in the event of a power failure or malfunction. Place the ice packs directly on the food in the top compartment.
- Ensure that the freezer compartment door is always closed properly.
- The arrangement of the fittings does not affect the energy rating of the appliance.
- To prevent increased power consumption, occasionally clean the ventilation opening with a paint brush or vacuum cleaner.

Operating noises

Quite normal noises

Droning
Motors are running (e.g. refrigerating units, fan).

Bubbling, humming or gurgling noises
Refrigerant is flowing through the tubing.

Clicking
Motor, switches or solenoid valves are switching on/off.

Preventing noises

The appliance is not level
Please align the installation cavity with a spirit level. To do this, use the height-adjustable feet of the cavity or place something underneath.

Containers or storage areas wobble or stick
Please check the removable parts and re-insert them correctly if required.

Receptacles are touching each other
Move the receptacles slightly away from each other.

Eliminating minor faults yourself

Before you call customer service:

Please check whether you can eliminate the fault yourself based on the following information.

Customer service will charge you for advice – even if the appliance is still under guarantee!

Fault	Possible cause	Remedial action
Temperature differs greatly from the set value.		In some cases it is adequate to switch off the appliance for 5 minutes. If the temperature is too high wait a few hours and check whether the temperature has approached the set value. If the temperature is too low check the temperature again the next day.
Bottom of the refrigerator compartment is wet.	The condensation channel or drainage hole are blocked.	Clean the condensation channel and the drainage hole. See chapter Cleaning the appliance. Fig. 9
The temperature in the refrigerator compartment is too cold.	Temperature has been set too low.	Increase the temperature.
The refrigerating unit is switching on more frequently and for longer.	Appliance opened frequently.	Do not open the appliance unnecessarily.
	The ventilation openings have been covered.	Remove obstacles.

Fault	Possible cause	Remedial action
Appliance has no refrigeration capacity. The light does not work. The display does not illuminate.	Appliance has been switched off.	Press the On/Off button.
	Power failure.	Check whether the power is on.
	The fuse has been switched off.	Check the fuse.
	The mains plug has not been inserted properly.	Check whether the mains plug is secure.
Appliance is not cooling, temperature display and light are lit.	Showroom mode is switched on.	Hold down alarm button, Fig 2/1, for 10 seconds until an acknowledgement signal sounds. After a short time check whether your appliance is cooling.
The light does not function.	The LED light is defective.	See chapter “Light (LED)” section.
	Appliance was open too long. Light is switched off after approx. 10 min.	When the appliance is closed and opened, the light is on again.
Temperature display for the refrigerator compartment flashes. Fig. 2/7	Appliance opened frequently.	Do not open the appliance unnecessarily.
	Too much food was placed in the compartment.	Before placing food in the freezer, press the super button 5.
	The airing and ventilation openings are blocked.	Remove obstacles.
Warning signal sounds and the temperature display flashes. The freezer compartment is too warm! Frozen food is at risk.	Freezer compartment door is open.	See chapter entitled “Alarm functions”.
	Too much food was placed in the freezer compartment at once.	

Customer service

Your local customer service can be found in the telephone directory or in the customer-service index. Please provide customer service with the appliance product number (E-Nr.) and production number (FD-Nr.).

This information can be found on the rating plate. Fig. 11

To prevent unnecessary call-outs, please assist customer service by quoting the product and production numbers. This will save you additional costs.

Repair order and advice on faults

Contact information for all countries can be found on the enclosed customer service list.

GB	0344 892 8999	Calls charged at local or mobile rate.
IE	01450 2655	0.03 € per minute at peak. Off peak 0.0088 € per minute.
US	866 447 4363	toll-free

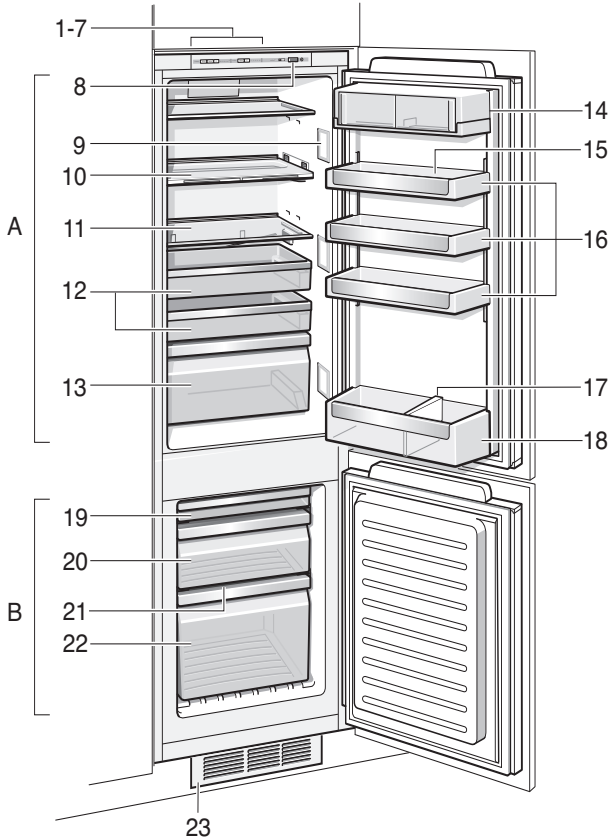
1-7
8
9
10
11
12
13
A
14
15
16
17
18
19
20
21
22
B
23

1

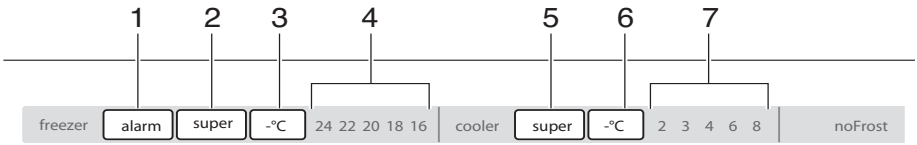
1
2
3
4
5
6
7
freezer
alarm
super
-°C
24 22 20 18 16
cooler
super
-°C
2 3 4 6 8
noFrost

2

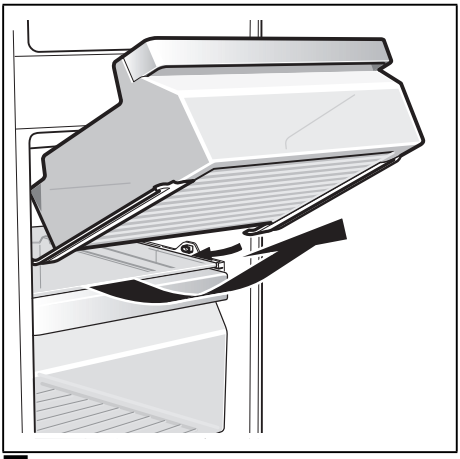

3

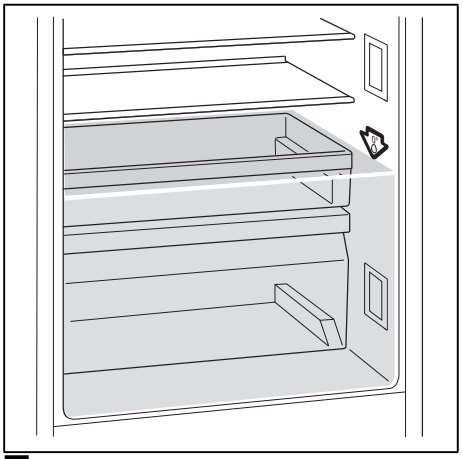

4

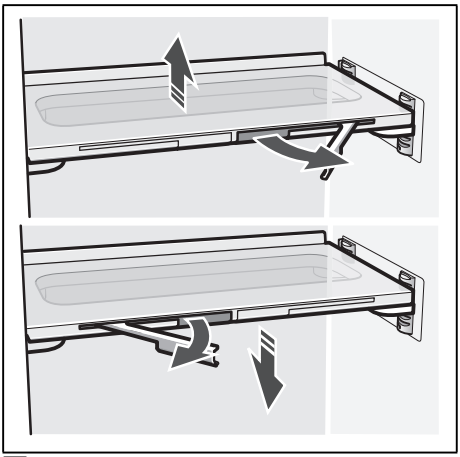

5

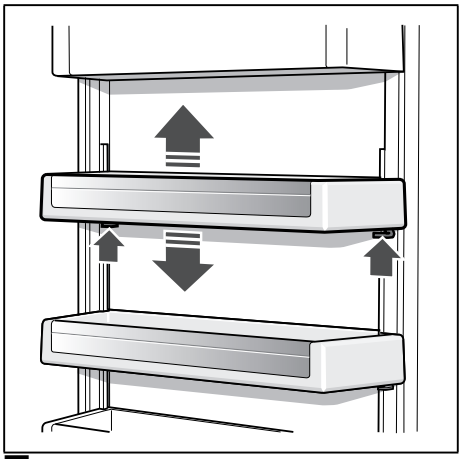

6

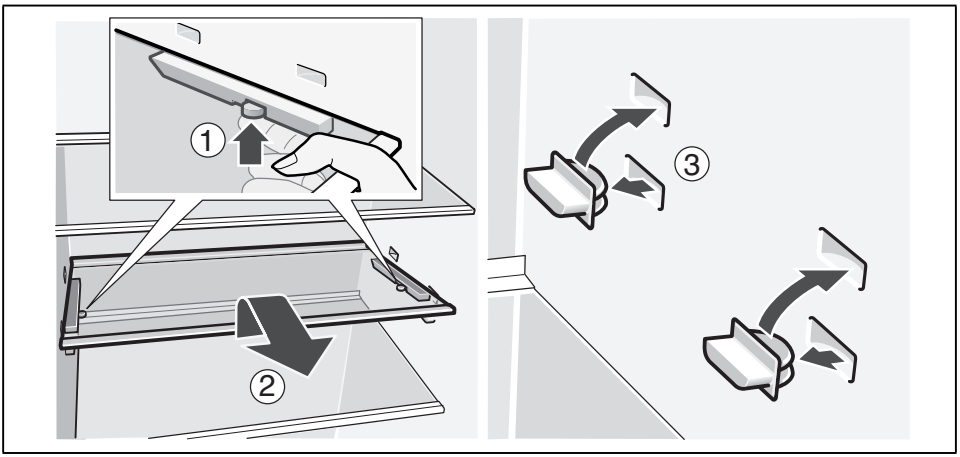

7

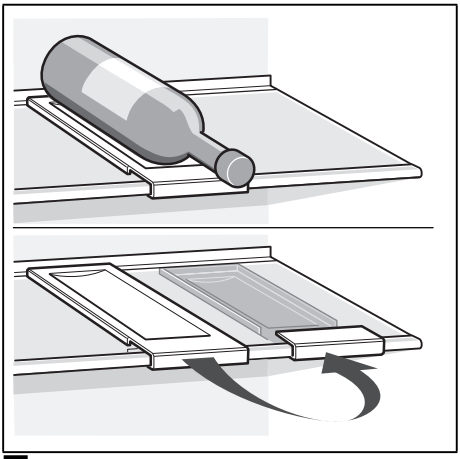

8

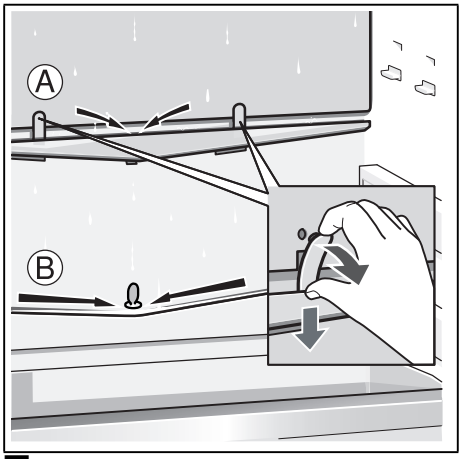

9

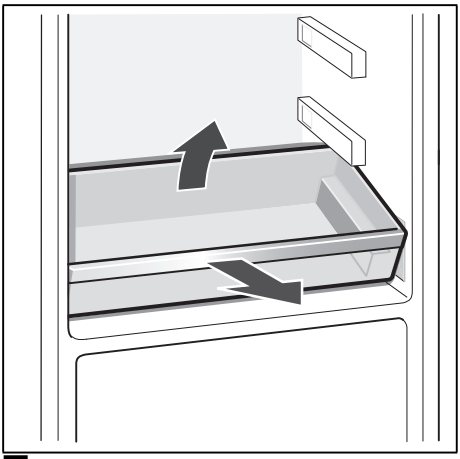

10

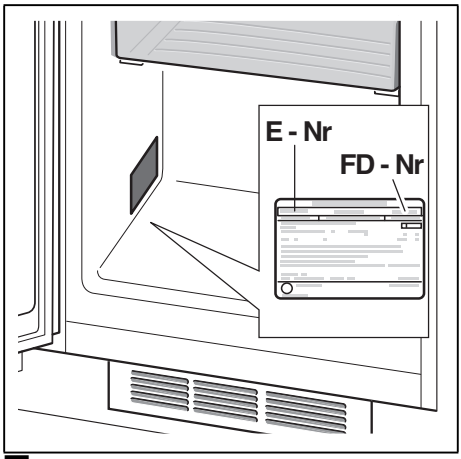

11

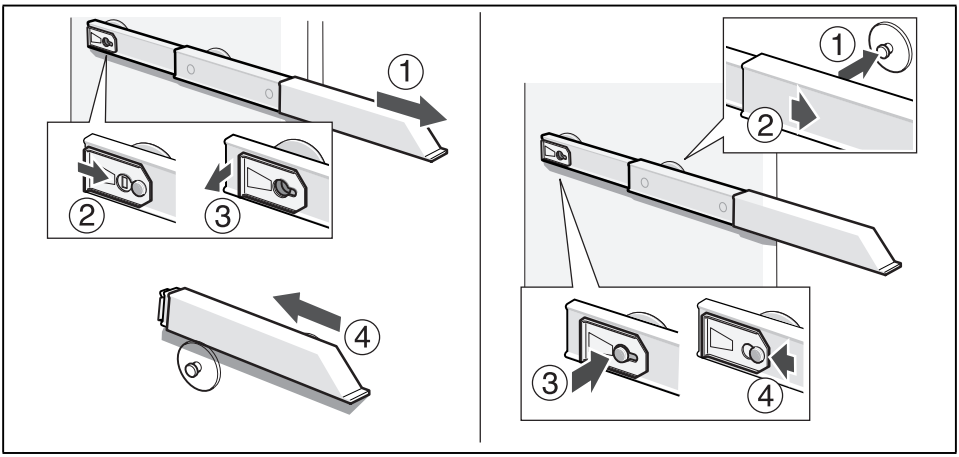

12

BSH Hausgeräte GmbH
Carl-Wery-Straße 34
81739 München, GERMANY

siemens-home.bsh-group.com

Manufactured by BSH Hausgeräte GmbH under Trademark License of Siemens AG

8001047492 (9608)
en