SIEMENS

Instructions for Use

en

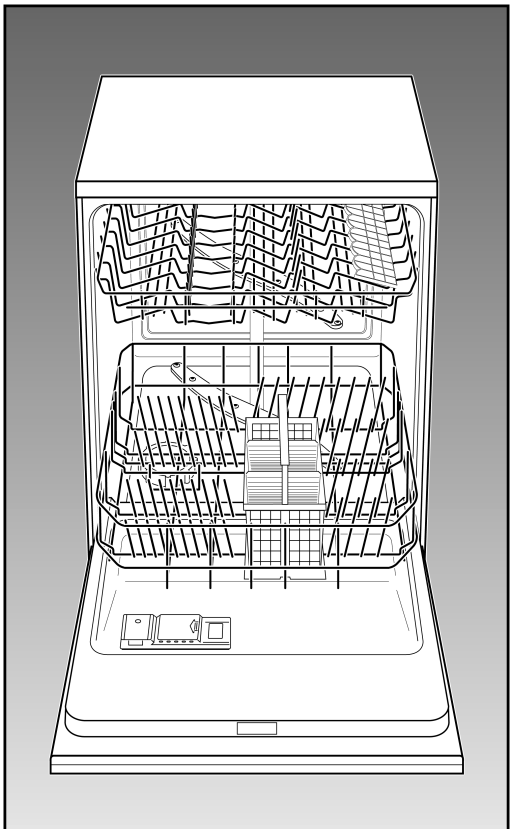

5600 044 472 (8103)

en

Index

Safety information 3
Getting to know your dishwasher 4
Water softener 5
Filling the special salt container 6
Filling the rinse-aid container 7
Not suitable for the dishwasher 8
Arranging crockery, glasses, etc. in the dishwasher 9
Detergents 12
Programme overview 14
Washing dishes 15
Additional functions * 17
Care and maintenance 18
Fault finding 19
Customer Service 22
Other information 22
Installation 23

Safety information

At time of delivery

- Check packaging and dishwasher immediately for signs of transport damage. If the appliance is damaged, do not put it into use but contact your supplier without delay.
- Please dispose of packaging materials properly.

During installation

- Site the dishwasher and connect it up in accordance with the installation instructions.
- The dishwasher must not be connected to the electricity supply while installation is being carried out.
- Ensure that the domestic wiring is properly earthed.
- The mains electricity supply must conform to the details shown on the dishwasher nameplate.
- Do not connect the dishwasher to the electricity supply via an extension cable.
- Built-under and built-in appliances should always be installed under a continuous work surface which is attached to the adjacent cupboards, in order to ensure that the appliance is entirely stable.
- After the appliance has been installed, the mains plug should still be easily accessible.
- Not on all models:
  The plastic housing on the water input contains an electrically operated valve. The connecting wires are inside the inlet hose. Do not cut through this hose and do not immerse the plastic housing in water.

Warning:

For safety reasons, if the appliance is not fitted in a recess, thereby making a side wall accessible, the door hinge area should be covered at the side.
(Risk of injury)
Covers are available as optional accessories from customer services or specialist stores.

During normal use

- Use the dishwasher solely in a domestic environment and for its designated purpose: washing household tableware and other utensils.
- Do not place any heavy objects or stand on the door when it is open. The appliance could tip forward.
- The water inside the dishwasher is not suitable for drinking.
- Do not use solvents of any kind inside your dishwasher. They could cause an explosion.
- Open the door very carefully if the dishwasher is operating. There is a risk of water squirting out.

If your family includes children

- Do not permit small children to play with or operate the dishwasher.
- Keep children away from detergents and rinse-aids.
- Keep small children away from the open door of the dishwasher. There could still be some detergent left inside.

If a fault occurs

- Repairs or other work on the dishwasher should only be carried out by a qualified specialist.
- The dishwasher must be disconnected from the electricity supply before any repairs or other work are started. Pull the mains plug out of the wall socket or switch off at the fuse box. Grasp the plug to remove it from the socket; do not tug on the cable. Turn the water off at the tap.

When disposing of old appliances

- Appliances that have reached the end of their service life should be rendered inoperable in order to exclude the possibility of subsequent accidents. Pull the mains plug out of the wall socket, cut through the connecting cable and disable the door lock.
- Take the appliance to a designated waste disposal centre.

Warning:

Children could get locked in the appliance (risk of suffocation) or get stuck in other positions. Therefore: Remove the mains plug, cut the mains wire and set aside. Damage the door lock so that the door can no longer be closed.

Getting to know your dishwasher

Illustrations of the control panel and the interior of the dishwasher are shown on the rear fold-out cover of this manual. Fold this page out before you read the manual.

Control panel

1 Main switch
2 Door opener
3 Time delay
4 Digital display/ Programme progress indicator
5 Salt refill indicator
6 Rinse-aid refill indicator
7 Programme buttons
8 Additional functions *

* some models only

Appliance interior

20 Upper basket with 2-tiered cup rack
21 Additional cutlery basket for the top basket *
22 Upper spray arm
23 Lower spray arm
24 Container for special salt with level indicator *
25 Filters
26 Cutlery basket
27 Lower basket
28 Locking mechanism
29 Container for rinse-aid, with level indicator
30 Detergent compartment
31 Nameplate

* not on all models

You will need to purchase the following before using the dishwasher for the first time:

– special salt for use in dishwashers
– detergent
– rinse-aid

Only use products, which are suitable for dishwashers.

Water softener

In order to rinse dishes and glasses satisfactorily, the dishwasher requires soft water, i.e. containing little or no lime, otherwise water stains will be left behind on crockery and glasses, etc.
If the tap water exceeds a certain level of hardness, it must be softened, i.e. decalcified, so that it can be used in the dishwasher.
This is achieved by adding a special salt to the water softener inside the dishwasher.
The water softener, that is the required amount of salt, is set up according to how hard the tap water is.

Setting up the water softener

(see introduction)

Filling the special salt container

How the salt works

While washing is taking place, salt is automatically rinsed out of the salt container into the water softener where it dissolves the lime in the water.
The dissolved lime is pumped out of the dishwasher. The water softening system is then ready for the next load.
This process of regeneration can only function when the salt is dissolved in water.

Unscrew the lid on the salt container 24 .

Before you use the dishwasher for the first time, pour approx. 1 litre of water into the salt container.

Place the funnel supplied with the dishwasher in the filler hole.

Tip in enough salt to fill the container to the top (maximum of 1.5 kg). As you tip in salt, some of the water is displaced and drains away. When you have done this, clean off any remnants of salt from the area round the neck of the container. Screw the lid back onto the container, ensuring that it is not cross-threaded.

The LOW SALT indicator 5 on the front panel will light up initially but will extinguish again after a short period when the salt solution has become sufficiently concentrated.

Note

When the control is set to 0 , it is not necessary to fill up with salt as none will be consumed while the dishwasher is operating. The LOW SALT indicator is switched off. If the control is set between 1 and 7 , then salt must be added to the dispenser.

Warning!

Do not pour detergent into the container for special salt. This would destroy the water softener.

LOW SALT indicator

Add more salt as soon as the LOW SALT indicator 5 on the front panel lights up.

Filling the rinse-aid container

The purpose of a rinse-aid is to prevent the formation of water marks on tableware and utensils, and to ensure that glasses are clean and sparkling. The rinse-aid is consumed during the washing process.

- Fold back the lid on the rinse-aid container 29 .

  To open the lid, press the mark ⬇ on the rinse-aid lid and simultaneously lift the lid off the lug ⬆.

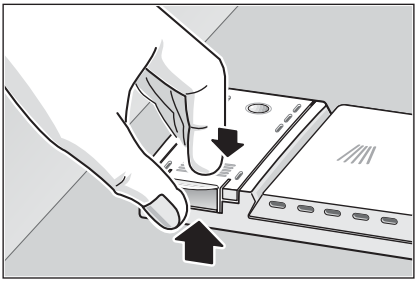

- Pour the rinse-aid into the filler hole until the level indicator turns dark.
- Close the lid, ensuring that you hear it snap closed.

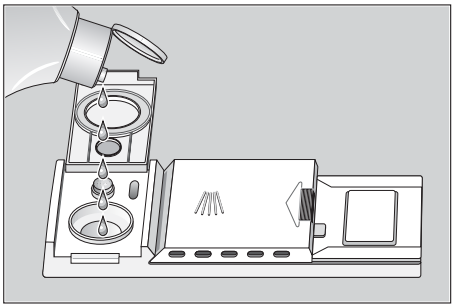

Important

Use only rinse-aids intended for use in domestic dishwashers.

Adjusting the amount of rinse-aid

The amount of rinse-aid added to the water can be varied by adjusting the stepless control. The rinse-aid control has been set to ”4” in the factory.

Do not alter the setting of the rinse-aid control unless streaks (turn knob towards ”–”) or water marks (turn knob towards ”+”) are left on the dishes.

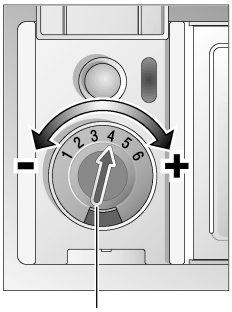

29

rinse–aid control

Low rinse-aid indicator

As long as the rinse-aid refill indicator on the panel 6 (on applicable models) or dispenser 29 has not illuminated, there is sufficient rinse-aid in the dishwasher.

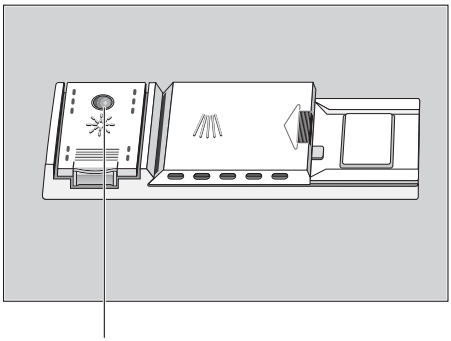

LOW RINSE-AID indicator

Not suitable for the dishwasher

What you should not put into the dishwasher:

Cutlery and tableware manufactured in whole or part from wood. They become faded and unsightly in appearance. Furthermore, the adhesives that are used are not suitable for the temperatures that occur inside the dishwasher. Delicate decorative glassware and vases, special antique or irreplaceable china. The decorative patterns on such items will not be dishwasher-proof.

Plastic objects that are not resistant to hot water, copper and pewter utensils are also not suitable. Decorative patterns printed or painted onto the surface of crockery, glasses, etc., aluminium and silver items tend to become discoloured or faded if washed in the dishwasher. Some types of glass can become opaque in appearance after they have been washed many times in a dishwasher. Highly absorbent materials, such as sponges and towels, should never be placed in the dishwater.

Our recommendation:

In future, only purchase table or kitchenware that has been confirmed as being dishwasher-proof.

Important

Dishes or cutlery that have been soiled by tobacco ash, wax, lubricating grease or paint, should not be put in the dishwasher.

Damage to glassware and other dishes

Possible causes:

- type of glass or manufacturing process
- chemical composition of detergent
- water temperature and duration of dishwasher programme.

Suggested remedy:

- Use glassware or porcelain dishes that have been marked ’dishwasher–proof’ by the manufacturer.
- Use a mild detergent that is described as ’kind to dishes’. If necessary, seek further information from detergent manufacturers.
- Select a programme with as low a temperature and as short a duration as possible.
- To prevent damage, take glass and cutlery out of the dishwasher as soon as possible after the programme has ended.

Arranging crockery, glasses, etc. in the dishwasher

Loading the dishwasher

Scrape off any large amounts of left-over food. It is not necessary to rinse the dishes under running water.
Place objects in the dishwasher in such a way that

- items such as cups, glasses, pots/pans, etc. are stood upside down,
- curved items, or those with recesses, should be at a slant so that water can run off,
- they are stacked securely and cannot tip over,
- they do not prevent the spray arms from rotating while washing takes place.

Very small items should not be washed in the dishwasher as they could easily fall out of the baskets.

Removing the dishes

To prevent water dripping from the top basket onto the dishes in the lower basket, we recommend that you empty the lower basket first and then the top basket.

Cups and glasses

Upper basket 20

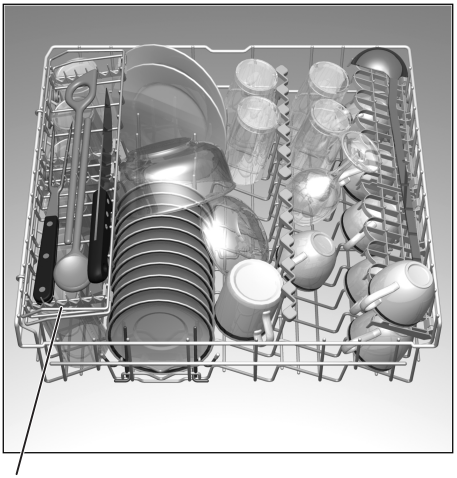

* on applicable models

Pots and pans

Lower basket 27

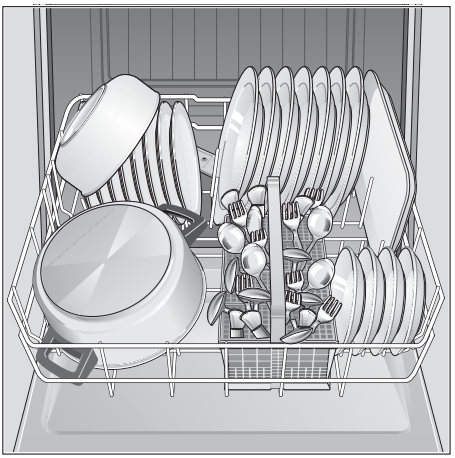

Cutlery

Cutlery should always be inserted in random order with the handles pointing downwards (take care with knife blades!). This enables the jet of water to reach the individual items more easily.

To prevent the risk of injury, place long and pointed implements and knives on the shelf (some models) or knife shelf (available as an accessory).

Folding spikes *

* on applicable models

To improve stacking of pots and pans, the spikes can be folded down.

Spray head for baking sheets *

* on applicable models

Please refer to the drawings enclosed in the envelope
Large baking sheets or grids can be cleaned with the aid of the special spray head. Remove the top basket and attach the spray head as shown in the drawing. Arrange the baking sheets as illustrated, so that the jet of water can reach all parts of them (max. 4 baking sheets and 2 grids).

Knife rack *

* on applicable models

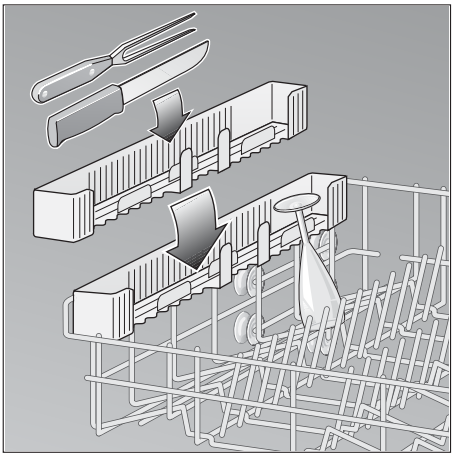

Shelf *

* not on all models

Lean tall glasses and those with long stems against the shelf – not against other items to be washed.

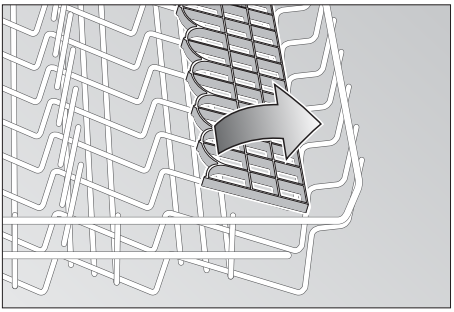

Long items, serving cutlery, salad servers or knives should be placed on the shelf so that they do not obstruct the rotation of the spray arms. The shelf can be folded back when not required for use.

Adjusting position of basket *

* not on all models

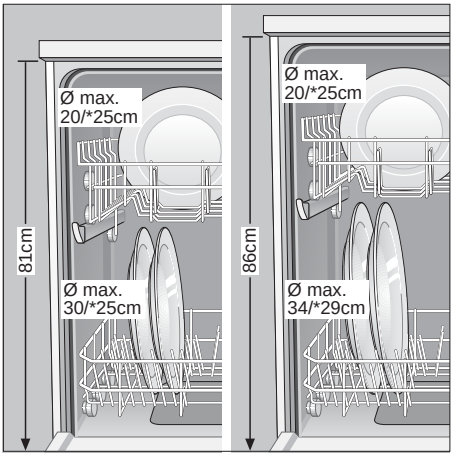

The top basket can be inserted on either its upper or lower rollers, according to requirement. This enables more height to be gained for bigger dishes in either the top or bottom basket.

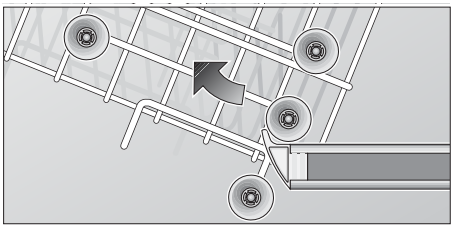

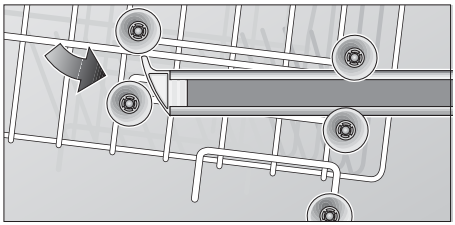

If required, the height of the top basket can be adjusted in order to create more space for large utensils either in the top or bottom basket.

– Pull out the top basket.

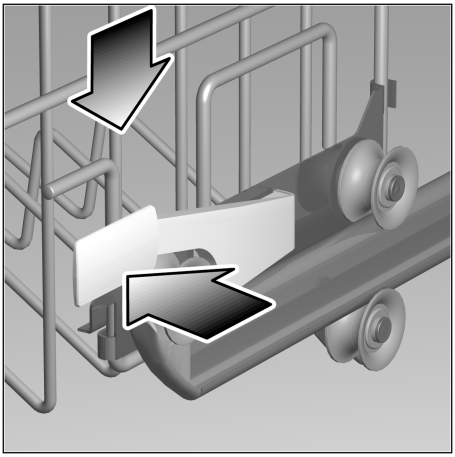

– To lower the basket, press in succession the two levers on the left and right sides of the basket. Always take hold of the side of the basket on the upper edge, otherwise the basket will not drop smoothly (and may damage the utensils).

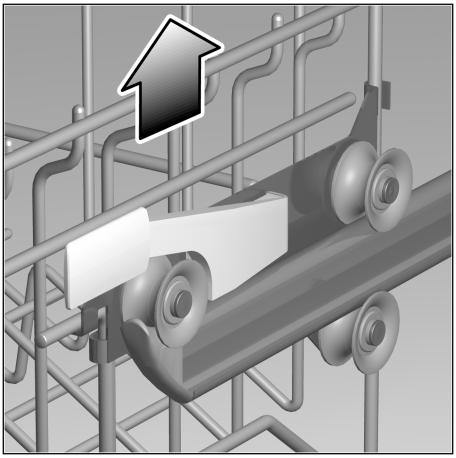

– To raise the basket, take hold of the basket on the upper edge and pull upwards.

– Before you re-insert the basket, ensure that it is at the same height on both sides. Otherwise, the appliance door cannot be closed and the upper spray arm will not connect to the water circuit.

Detergents

Information about detergents

You can use any brand of liquid or powder detergent, as well as tablets, that have been specifically designed for use in domestic dishwashers. (Do not use normal washing-up liquid!)

Nowadays there are three types of dishwasher detergent available:
1. those containing phosphates and chlorine,
2. those containing phosphates but no chlorine,
3. those containing neither phosphates nor chlorine.

When a phosphate-free detergent is used in conjunction with hard water, there is a greater possibility that white marks will be left behind on crockery and glasses, etc. These can be avoided by pouring an increased amount of detergent into the dispenser.

Chlorine-free detergents have a reduced bleaching effect. This can mean that tea stains are not completely removed or plastic items become discoloured.

This can be resolved by:
– selecting a higher temperature programme, or
– increasing the amount of detergent, or
– using a detergent that contains chlorine.

Check the label on the detergent packaging to determine whether a particular product is suitable for use with silverware.

If you have any further questions, we recommend that you contact the customer advice departments of the various detergent manufacturers.

Detergent compartment with measuring marks

The side of the detergent compartment is marked with lines to help you determine how much powder to add.
The capacity of the detergent container is 15 ml up to the bottom line and 25 ml up to the middle line. When the compartment is full it contains 40 ml.

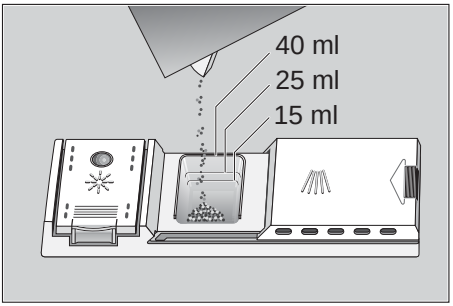

Important

If the lid on the detergent compartment is closed, press the release lever to open the flap.

Adding detergent

– Tip detergent powder into the corresponding compartment 30 .

  Please observe the manufacturer's instructions printed on the detergent packaging when determining the correct dosage.

  When you select the INTENSIVE programme, tip an extra 10–15 ml of detergent onto the inside surface of the door.

Reduce costs!

If you are using the upper rack only, or if your dishes are only moderately dirty, it will normally suffice to employ a reduced amount of detergent than otherwise recommended.

- Close the lid on the detergent compartment.
  Press down the lid (1) until it clicks shut (2).

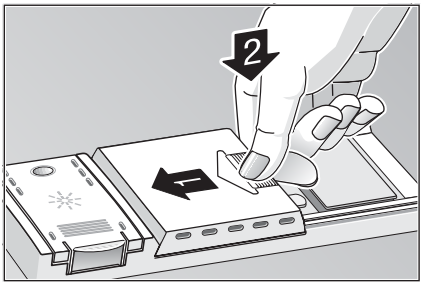

- If you are using detergent in tablet form, read the manufacturer's recommendations on the packaging in order to
  determine where the tablets should be placed inside the dishwasher (e.g. in cutlery basket, detergent compartment, etc.).
  Make sure that the lid on the detergent compartment is closed, even if you are using tablets.

⚠ CAUTION
IMPORTANT NOTE ON THE USE OF COMBINED CLEANING PRODUCTS

Please note the following when using "combined cleaning products" which eliminate the need for a rinsing agent or salt, for example:

Some products with a built-in rinsing agent are only used to their full effect in certain programmes.

This type of product does not generally produce the desired effect with automatic programmes.

Products which eliminate the need for regeneration salt can only be used within a certain water hardness range.

If you wish to use these combined products, please read the instructions carefully and heed any notes on the packaging.

Contact the manufacturer of the cleaning agent if you have any questions, particularly if:

- the crockery is very wet once the programme has finished.
- limescale deposits are formed.

Any problems which arise as a direct result of the use of these products are not covered by our warranty.

Programme overview

This overview lists the max. possible number of programmes. The programmes supplied with your appliance are indicated on the fascia.

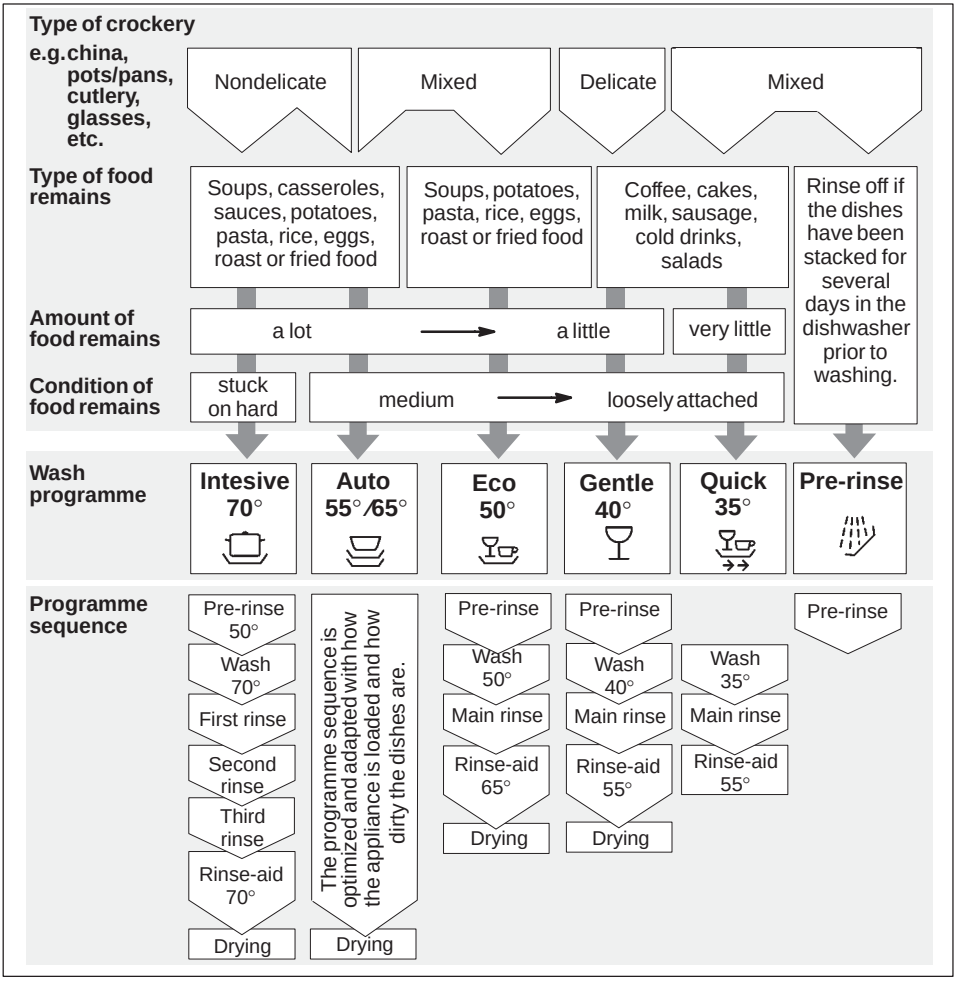

Programme selection

The most appropriate programme can be identified by comparing the type of crockery, cutlery, etc., as well as the amount and condition of food remains, with the details contained in the programme overview.

You will find the appropriate programme information in the introduction.

Washing dishes

Reduce costs!

If only a small number of dishes have been loaded into the dishwasher, selecting a programme that operates at the next lowest temperature will usually suffice.

Programme data

The stated programme data are based on standard operating conditions. The values can vary considerably according to:

- different amounts of dishes
- temperature of mains water supply
- pressure of mains water supply
- ambient temperature
- fluctuations in mains voltage
- machine-related factors (e.g. temperature, water volume, ...).

Energy and water consumption is reduced by up to 1/4 when dishes are washed in the upper basket only.

Water consumption values are based on a water hardness setting of 4.

Aquasensor

The Aquasensor is an optical measuring device with which the cloudiness of the water in the dishwasher is measured. A photoelectric sensor is used to detect the degree of soiling in the water, caused by dissolved food particles such as egg, fat and rolled oats, etc.

The Aquasensor functions during all programmes that include a pre-rinse cycle. If the water is still “clean” at the end of the pre-rinse cycle, then the same water is used for the following wash cycle. If the water is dirty, it is pumped out of the dishwasher and replaced by fresh water. The effect is to reduce water consumption by approx. 4 litres when the dishes are only “slightly” dirty.

Switching the dishwasher ON

- Turn on the tap.
- Set main switch 1 to ON.
  Indicators light up according to the last programme that was selected.
  This same programme will run again if no other programme button 7 is pressed
- The numerical display 4 shows the expected duration of the programme.
- Close door.
  The programme starts automatically.

End of programme

The end of programme is indicated by a buzzer.
This function can be changed as follows:

- Hold down the Time delay programme button 3 and switch on the Main switch 1, then release the buttons.

  The Time delay button 3 flashes and the digital display indicates the value 2 (loud) which was set at the factory.

  To change the setting:
  Press the Time delay programme button 3.

  Each depression of the button increases the set value by one; when 2 is reached, the display jumps back to 0 (off).
- Switch off the Main switch 1. The set value is stored in the appliance.

Switching the dishwasher OFF

Several minutes after the programme has ended:

- Open the door when the programme has ended.
- Set main switch 1 to OFF.
- Turn the water tap off.
  (Does not apply when Aqua-Stop unit has been fitted)
- Remove dishes, etc. when they have cooled down.

Interrupting the programme

- Open the door. Caution! There is a risk of water squirting out from inside the appliance. Do not open the door fully until the spray arm has stopped rotating.
- Set main switch 1 to OFF.
- Indicator lights extinguish. The programme is retained in the dishwasher memory.
- If the hot water was switched ON or the appliance has already heated up and then the appliance door opened, leave the door ajar for several minutes and then close.
  Otherwise, the appliance door may fly open due to expansion.
- In order to continue with the stored programme, set the main switch to ON again and close the door.

Programming the timer

You can delay the start of a programme in increments of one hour for up to 19 hours.

- Switch dishwasher ON.
- Immediately press the TIMER button 3. The numerical display 4 changes to 1h .
- Press the TIMER button as many times as necessary until the numerical display shows the required delay.
- To erase the time delay setting, keep pressing the TIMER button until 0h appears in the numerical display.
  You can change your programme selection as often as you like during the intervening period before the dishwasher starts up.

Time-remaining indicator

The time-remaining indicator is self-learning. When the programme begins, it displays the estimated duration of that programme. This figure is based upon the duration of the previous programme, or if the dishwasher is being used for the first time, the duration of the programme used for testing the appliance in the factory. While the programme is running, the indicator shows the amount of time before the programme ends. The time remaining is also adjusted to account for the temperature of the water supply and the number of dishes.

Intensive drying function

Activating the intensive drying function increases the temperature during the rinse-aid stage which gives better drying results.

- Press and hold the A programme button, and set the main switch 1 to ON.
- Release both buttons.
  Either 1 (ON) or 0 (OFF) flashes in the numerical display 4.
- Press the A programme button to change the setting.
- Set the main switch 1 to OFF. The new setting is stored in the dishwasher memory.

Cancel programme (Reset)

- Only when the master switch is ON. Press the A and C buttons simultaneously, and hold them pressed for approx. 3 seconds.
  The numerical display shows 0 .
- Close the door.
- The programme continues for approx. 1 min.
- When it has ended, set the main switch 1 to OFF.
- Close the detergent compartment 30 .

To restart the dishwasher, set main switch 1 to ON again and select desired programme.

Changing the programme

It is possible to change the programme within 2 minutes after you have switched the dishwasher on.

Should it be necessary to change the programme after this period, the programme cycle that has already been begun (e.g. washing) will be completed first of all.

The new remaining time displayed is the sum of the remaining time from the preceding programme cycle and the remaining time attributable to the new programme that has been selected.

Additional functions *

* on applicable models

Pre-Soak *

The Pre-Soak programme option serves to perform a pre-soak cycle before the main programme. This cycle enables cookware, e.g. pans, bowls, etc. to be pre-soaked and pre-rinsed in the lower rack. If you wish to pre-soak the dishes, this programme option must be selected by pressing the “Pre-Soak” button before the programme starts. The recommended detergent amount is approx. 5 g poured onto the inside of the door.

Quick *

Pressing the “Quick” button provides a short wash cycle by curtailing the drying phase and the washing time. The washing and drying performance will be reduced with the Quick programme option.

Washing contents of UPPER RACK only *

If you have a small number of dishes to wash in the upper rack (e.g. glasses, cups, plates), switch on the UPPER RACK function. If you select the UPPER RACK function, the lower rack must be empty. Add a reduced amount of detergent compared to that which is recommended for a full load.

Washing contents of LOWER RACK only *

If you have a small number of dishes to wash in the lower rack (e.g. plates, pans, bowls), switch on the LOWER RACK function. If you select the LOWER RACK function, the upper rack must be empty. Add a reduced amount of detergent compared to that which is recommended for a full load.

Care and maintenance

Regular inspection and maintenance of your appliance helps to prevent problems from occurring. This saves time and aggravation. You should therefore carefully inspect the inside of your dishwasher from time to time.

Overall condition of appliance

- Check that no grease or scale has accumulated on the inside of the dishwasher.
  If you discover any deposits:
- Clean the interior of the dishwasher thoroughly with a detergent solution.

Special dishwasher salt

Check the LOW SALT indicator 5 . Top up with salt, if required.

Rinse-aid

Check the LOW RINSE-AID indicator 6 on the front panel or the level indicator on the rinse-aid container 29 . Top up with rinse-aid, if required.

Filters

The filters 25 prevent larger remnants of food or other objects from getting inside the pump. This residue can occasionally clog up the filters.

The filter system consists of a filter cylinder, a flat fine filter and, depending on the model, a microfilter (*).

- Inspect the filters for obstructions every time the dishwasher has been used.
- By unscrewing the filter cylinder, you can remove the filter system. Remove any food remnants and clean the filters under running water.

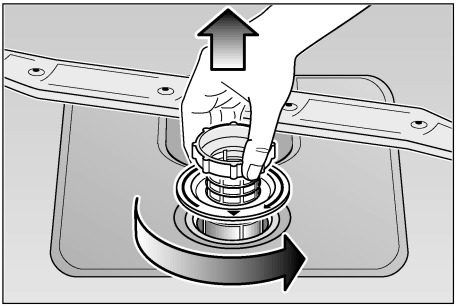

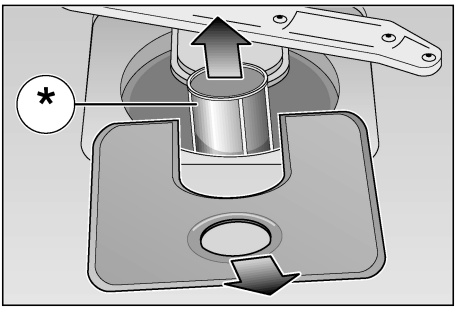

- Reassembly:
  Insert the filter system and screw down with the filter cylinder.

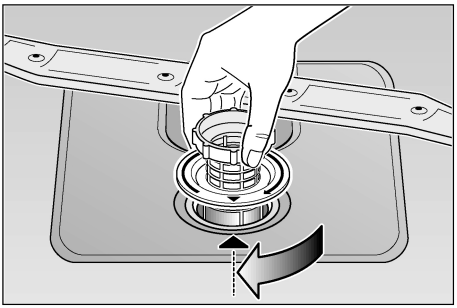

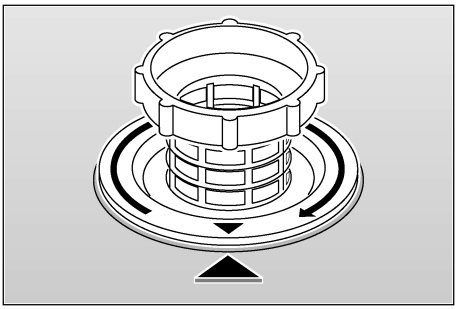

Spray arms

Lime and remnants of food in the washing water can block the nozzles in the spray arms 22 and 23 and the arm mountings .

- Inspect the nozzles in the spray arms for blocked holes due to remnants of food.
- If necessary, pull the lower arm 23 upwards and lift it off.
- Unscrew the upper spray arm 22 .
- Clean both spray arms under running water.
- Refit the spray arms. Ensure that the lower arm has locked into place and the upper one is screwed tight.

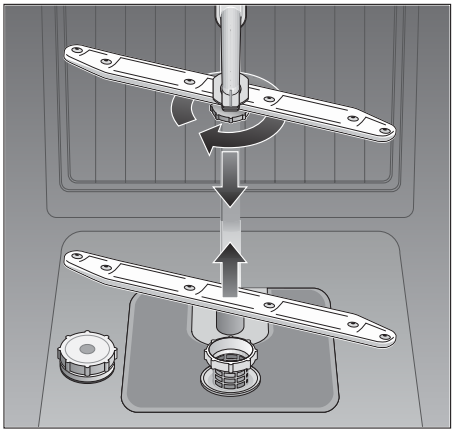

Spray arms

Fault finding

Resolving minor problems yourself

Experience has shown that you can resolve most problems that arise during normal daily usage yourself, without having to call out a service engineer. Not only does this save costs, but it also means that the appliance is available for use again that much sooner. The following list of common occurrences and their remedies should help you identify the causes of most problems.

Problems ...

... when the appliance is switched on

- **Appliance does not start up**
  - Fault with fuse in mains electricity supply.
  - Plug not inserted in wall socket.
  - Appliance door not closed properly.
  - Water tap not turned on.
  - Blocked strainer in water intake hose.
    The strainer is situated in the Aquastop or supply-hose connection.

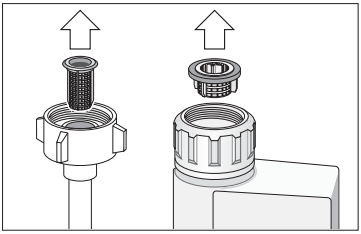

Caution

Do not forget that repairs should only be carried out by a qualified specialist. Improper repairs can lead to considerable equipment damage as well as danger to the user.

... with the appliance itself

- **Lower spray arm rotates with difficulty**
  - Spray arm is blocked by small items or food remains.
- **Lid in detergent compartment cannot be closed**
  - Detergent compartment has been overfilled.
  - Mechanism is clogged with remnants of detergent.
    Indicator lamps do not extinguish after washing has finished.
- **Indicator lamps do not extinguish after washing has finished**
  - Main switch is still set to ON.
- **Remnants of detergent stuck inside dispenser**
  - Compartment was damp when it was filled up with detergent. Compartment must be dry before detergent is added.
- **Water remains inside appliance after programme has ended**
  - Blockage or kink in drainage hose.
  - Pump is jammed.
  - Filters are blocked.
  - The programme is still running. Wait for the programme to end (numerical display will indicate 0).
  - Perform “Reset” function.

... during washing

- **Unusual amount of foam is created**
  - Normal washing up liquid has been poured into the rinse-aid container.
  - Remove any spilled rinse aid with a cloth as it could otherwise lead to excessive foaming during the next washing cycle.
- **Appliance stops suddenly while washing is taking place**
  - Cut in electricity supply to appliance.
  - Water supply has been interrupted.
- **Knocking sound can be heard while washing is taking place**
  - A spray arm is knocking against the dishes inside the appliance.
- **Rattling sound can be heard while washing is taking place**
  - Crockery has not been stacked properly inside the appliance.
- **Knocking sound coming from inlet valves**
  - This is caused by the way the water pipes have been laid and it has no effect upon the way the appliance functions. There is no remedy for this.

... with the dishes, cutlery, etc.

- **Remnants of food are stuck to the dishes, cutlery, etc.**
  - Dishwasher was not loaded properly. Jets of water could not reach all parts of the dishes, etc.
  - Too many items in the rack.
  - Items in the rack were touching each other.
  - Not enough detergent was added to dispenser.
  - Selected wash programme was not intensive enough.
  - Rotation of spray arm was obstructed by dish, etc.
  - Nozzles in spray arm are blocked by remnants of food.
  - Filters are blocked.
  - Filters have been incorrectly fitted.
  - Waste-water pump is jammed.
- **Plastic items are discoloured**
  - Not enough detergent was added to dispenser.
  - Detergent has insufficient bleaching properties. Use a detergent containing a chemical bleaching agent.
- **White stains are left on crockery, glasses have a milky appearance**
  - Not enough detergent was added to input compartment.
  - Amount of rinse-aid was set too low.
  - Although water is quite hard, no salt has been put in appliance.
  - Water softener was set too low.
  - Lid on salt container is not screwed tight.
  - If you used a phosphate-free detergent, try a detergent containing phosphates and compare results.
- **Dishes, cutlery, etc. have not been dried**
  - Selected programme did not include drying function.
  - Amount of rinse-aid was set too low.
  - Items were removed from dishwasher too soon.
- **Glasses have a dull appearance**
  - Amount of rinse-aid was set too low.
- **Tea stains or traces of lipstick have not been completely removed**
  - Detergent does not have a sufficient bleaching effect.
  - Washing temperature was set too low.
- **Traces of rust on cutlery**
  - Cutlery is not sufficiently rustproof.
  - Salt content in washing water is too high.
    - Lid on salt container is not screwed tight.
    - Too much salt was spilt while filling container.
- **Glasses become clouded and discoloured; coating cannot be wiped off**
  - Unsuitable detergent was used.
  - Glasses are not dishwasher-proof.
- **Smears left behind on glasses and cutlery; glasses have acquired a metallic appearance**
  - Amount of rinse-aid set too high.

Customer Service

Please call your local service agent, if you are not able to resolve any problem yourself. The name of your nearest service agent is shown in the Customer Service address list. When you call, please provide details of the model number (1) and the production (FD) number (2) which are shown on the nameplate on the appliance door.

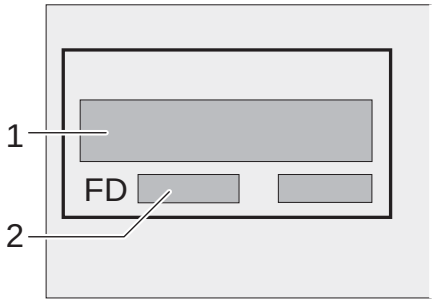

Warning

Please note that a visit by the customer service technician in the event of a fault or one of the problems previously discussed is not free of charge even during the warranty period.

Other information

Notes on waste disposal

Old appliances still have some residual value. An environment-friendly method of disposal will ensure that valuable raw materials can be recovered and used again.

When an appliance has reached the end of its working life, unplug it from the mains. Cut through the mains cable and dispose of it together with the plug.
Destroy the door locking mechanism. This will ensure that children at play cannot become locked inside and are not exposed to the risk of suffocation.

Your new appliance was protected by suitable packaging while it was on its way to you. All materials used for this purpose are environment-friendly and can be recycled. Please make a contribution to protecting the environment by disposing of the packaging appropriately.

Do not allow children to play with any parts of the packaging. There is a risk of suffocation by the cardboard boxes and the plastic wrapping.

Up-to-date information concerning options for disposal can be obtained from your retailer or local municipal administration.

Notes on comparison tests

You will find details of the conditions for the comparison tests on the additional ”Notes on comparison tests” sheet. The consumption values for the relevant programmes are given in the introduction.

General information

- Measures must be taken to ensure that built-under and built-in units that are subsequently re-sited as free-standing appliances cannot topple over. This can be achieved by bolting the dishwasher to the wall or fitting it under a continuous work surface which is screwed to the adjacent cupboards.
- For Switzerland only:
  There are no restrictions on installing the appliance between wooden or plastic walls as part of a fitted kitchen. If the appliance is not plugged into a wall socket, it must be connected to the mains via a separator for all poles within the domestic wiring system. This device must have a gap of at least 3 mm between open contacts, in order to conform with relevant safety regulations.

Installation

In order to function correctly the dishwasher must be properly installed. Specifications for the water intake and waste-water drainage, as well as electrical connections, must fulfil the criteria that are set out in the following paragraphs and the installation instructions.

When installing the dishwasher, carry out tasks in the following order:
– check contents of delivery upon receipt,
– site dishwasher,
– connect drainage hose,
– connect inlet hose to water supply,
– connect dishwasher to electricity supply.

Checking contents of delivery

All functions of your dishwasher have been thoroughly tested in the factory. A small number of water marks have been left on the dishwasher as a result. They disappear as soon as the appliance is used for the first time.

Siting the dishwasher

Dimensions associated with siting the dishwasher are contained in the installation instructions. Ensure that the appliance is completely level by adjusting the feet. Make sure that it is standing on a firm surface.

Drainage connection

See the installation instructions for details of procedure to be followed.
If necessary, fit a siphon trap (U-bend) with a connecting piece for the drainage hose. Connect the drainage hose to the trap using the enclosed parts.

Fresh-water connection

Connect the inlet hose to a water tap using the enclosed parts and in accordance with the installation instructions.

Water pressure:

Minimum 0,5 bar – maximum 10 bar.
If the water pressure is higher, install a pressure reducing valve.

Flow rate:

Minimum of 10 litres per minute.

Water temperature:

We recommend that you use cold water.
If you do use hot water, the temperature should not exceed 60 °C.

Electrical connection

This appliance should only be connected to a 230/240 V AC source via a properly installed earthed socket. See nameplate 31 for size of required fuse.
The socket must be installed close to the dishwasher.

If you need to extend the mains connecting lead, do not cut off the plug. Replace the whole cable, which can be disconnected at the junction box on the rear of the appliance.

If the domestic wiring includes a residual-current-operated (FI) circuit-breaker, make sure that it bears the mark, as only this type conforms to the latest regulations

Disconnecting the dishwasher

Here too, it is important that tasks are carried out in the correct sequence:
always unplug the appliance from the mains electricity first of all.
Pull plug out of wall socket.
Turn off water supply.
Disconnect drain and water input hoses.
Remove screws in underside of work surface. Detach base board, if fitted.
Pull out appliance and carefully withdraw hoses at same time.

Transporting the dishwasher

Drain water from the dishwasher. Secure all loose parts. The appliance should only be transported in an upright position.

- If the appliance is not kept upright during transport, any water left inside may seep into the control module and cause subsequent errors with programme functions.
- The appliance must be drained in the following sequence:
  - Turn on the tap.
  - Set main switch to ON.
  - Select the B programme. The programme duration in minutes is shown in the numerical display.
  - Close the door.
  - Wait for approximately 4 minutes.
  - Terminate the programme by pressing A and C simultaneously.
  - The time display changes to 0 .
  - Wait a further minute and then switch the appliance off.
  - Turn off the tap.

Protection from freezing temperatures

If the appliance is installed in a location where there is a risk of freezing temperatures (e.g. in a holiday home), all water must be completely drained out of the interior (see “Transporting the dishwasher”).

Turn OFF the tap, disconnect the supply hose and allow to drain.

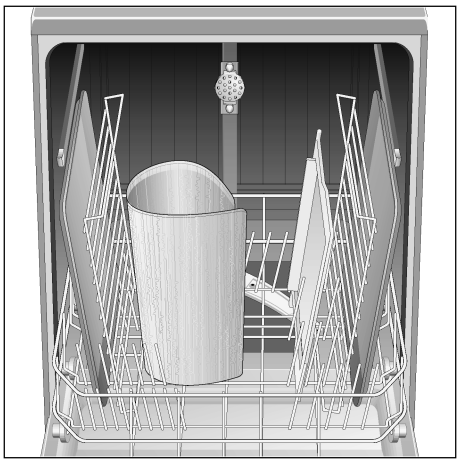

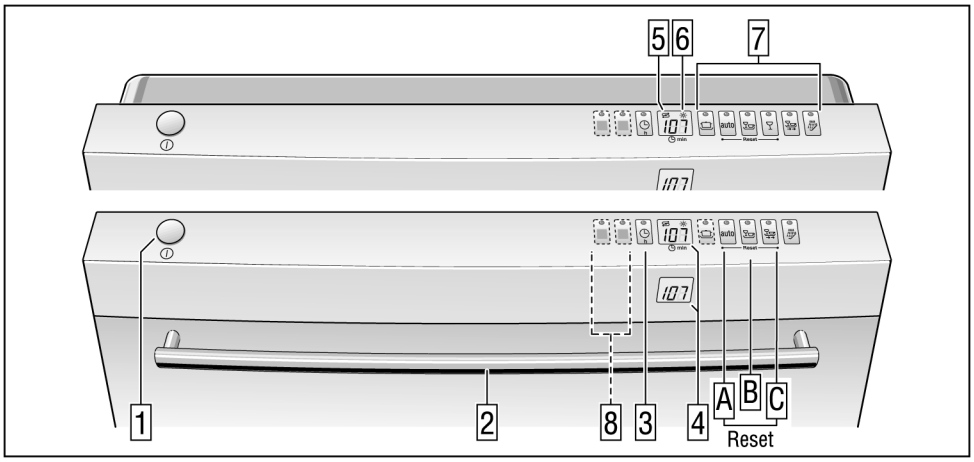
5
6
7
1
2
8
3
4
A
B
C
Reset

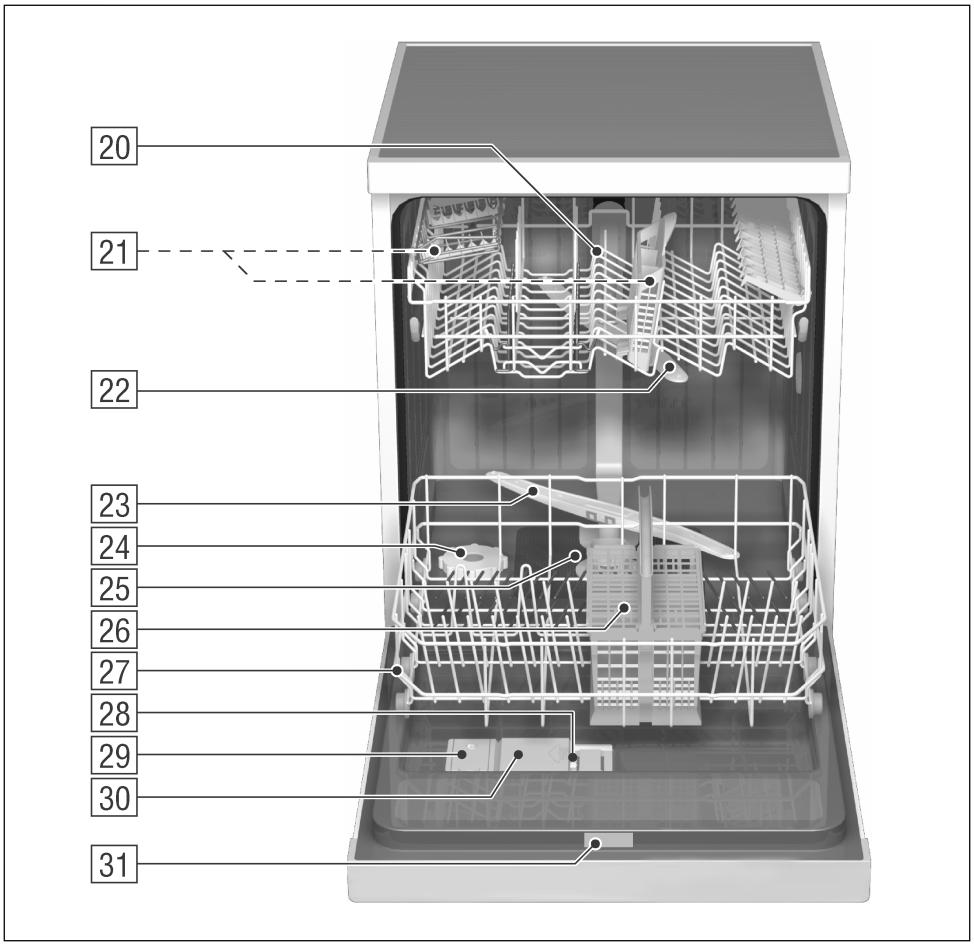
20
21
22
23
24
25
26
27
28
29
30
31

AQUA-STOP Warranty.

(not applicable to appliances without Aqua-Stop)

In addition to warranty claims against the seller based on the sales agreement and in addition to our appliance warranty we shall replace the appliance under the following conditions:

1. If damage is caused by water due to a malfunction of our Aqua-Stop system, we shall make good the damage in the case of private consumers.
2. This liability warranty is valid for the service life of the appliance.
3. The warranty claim is subject to correct installation and connection of the appliance in accordance with our instructions. “This also includes correct installation of the Aqua-Stop extension (original accessory).” Our warranty does not cover defective supply lines or fittings up to the Aqua-Stop connection on the tap.
4. In principle, it is not necessary to monitor an appliance fitted with Aqua-Stop during operation or to secure it afterwards by turning off the tap. You should only turn off the tap if you are absent from home for a prolonged period, e.g. on holiday for several weeks.

Family Line

01805–2223

Siemens–Hausgeräte
EUR 0,12/Min. DTAG

Besuchen Sie uns im Internet:
http://www.siemens.de/hausgeraete

5 600 044 472 en (8103)
634 V Arc